070-6557-00
Product Group 46

2245A PORTABLE OSCILLOSCOPE

SERVICE

http://www.ebaman.com

WARNING

THE FOLLOWING SERVICING INSTRUCTIONS ARE FOR USE BY QUALIFIED PERSONNEL ONLY. TO AVOID PERSONAL INJURY, DO NOT PERFORM ANY SERVICING OTHER THAN THAT CONTAINED IN OPERATING INSTRUCTIONS UNLESS YOU ARE QUALIFIED TO DO SO. REFER TO OPERATORS SAFETY SUMMARY AND SERVICE SAFETY SUMMARY PRIOR TO PERFORMING ANY SERVICE.

Please Check for CHANGE INFORMATION at the Rear of This Manual

First Printing JAN 1988

Tektronix®
COMMITTED TO EXCELLENCE

Copyright © 1988 Tektronix, Inc. All rights reserved. Contents of this publication may not be reproduced in any form without the written permission of Tektronix, Inc.

Products of Tektronix, Inc. and its subsidiaries are covered by U.S. and foreign patents issued and pending.

TEKTRONIX, TEK, SCOPE-MOBILE, and  are registered trademarks of Tektronix, Inc.

Printed in U.S.A. Specification and price change privileges are reserved.

INSTRUMENT SERIAL NUMBERS

Each instrument has a serial number on a panel insert, tag, or stamped on the chassis. The first two digits designate the country of manufacture. The last five digits of the serial number are unique to each instrument. The country of manufacture is identified as follows:

B000000 Tektronix, Inc., Beaverton, Oregon, U.S.A.

E200000 Tektronix United Kingdom, Ltd., London

G100000 Tektronix Guernsey, Ltd., Channel Islands

HK00000 Hong Kong

H700000 Tektronix Holland, NV, Heerenveen, The Netherlands

J300000 Sony/Tektronix, Japan

http://www.obaman.com

TABLE OF CONTENTS

Page

LIST OF ILLUSTRATIONS iv
LIST OF TABLES v
OPERATORS SAFETY SUMMARY vi
SERVICING SAFETY SUMMARY vii

Section 1 SPECIFICATION

DESCRIPTION 1-1
ACCESSORIES 1-1
PERFORMANCE CONDITIONS .. 1-1
RECOMMENDED RECALIBRATION SCHEDULE ... 1-1

Section 2 PREPARATION FOR USE

SAFETY 2-1
LINE VOLTAGE AND POWER CORD 2-1
LINE FUSE 2-1
INSTRUMENT COOLING 2-2
START-UP 2-2
DETAILED OPERATING INFORMATION 2-2

Section 3 THEORY OF OPERATION

SECTION ORGANIZATION 3-1
INTEGRATED CIRCUIT DESCRIPTIONS 3-1
BLOCK DIAGRAM DESCRIPTION 3-1

Page

INTRODUCTION 3-1
VERTICAL INPUTS (Diagram 1) 3-1
VERTICAL PREAMPS AND OUTPUT AMPLIFIER (Diagram 2) 3-4
A AND B TRIGGER SYSTEM (Diagram 3) 3-4
DISPLAY AND TRIGGER LOGIC AND PROCESSOR INTERFACE (Diagram 4) 3-5
A AND B SWEEPS AND DELAY COMPARATORS (Diagram 5) 3-6
HORIZONTAL OUTPUT AMPLIFIER (Diagram 6) 3-6
Z-AXIS, CRT, PROBE ADJUST, AND CONTROL MUX (Diagram 7) 3-6
MEASUREMENT PROCESSOR (Diagram 8) 3-7
READOUT SYSTEM (Diagram 9) 3-7
SWITCH BOARD AND INTERFACE (Diagram 10) 3-8
ADC AND DAC SYSTEM (Diagram 11) 3-8
POWER SUPPLY (Diagram 12) 3-8
DETAILED CIRCUIT DESCRIPTION 3-8
VERTICAL INPUTS (Diagram 1) 3-8
VERTICAL PREAMPS AND OUTPUT AMPLIFIER (Diagram 2) 3-11
A AND B TRIGGER SYSTEM (Diagram 3) 3-14

http://www.ebaman.com

TABLE OF CONTENTS (cont)

Page

DISPLAY AND TRIGGER LOGIC AND PROCESSOR INTERFACE (Diagram 4) 3-18
A AND B SWEEPS GENERATORS AND DELAY COMPARATORS (Diagram 5) 3-33
HORIZONTAL OUTPUT AMPLIFIER (Diagram 6) 3-39
Z-AXIS, CRT, PROBE ADJUST AND CONTROL MUX (Diagram 7) 3-40
MEASUREMENT PROCESSOR (Diagram 8) 3-44
READOUT SYSTEM (Diagram 9) 3-47
SWITCH BOARD AND INTERFACE (Diagram 10) 3-52
ADC AND DAC SYSTEM (Diagram 11) 3-54
POWER SUPPLY (Diagram 12) 3-55
MAIN BOARD POWER DISTRIBUTION (Diagram 13) 3-60
PROCESSOR BOARD POWER DISTRIBUTION (Diagram 14) 3-60
INTERCONNECTION DIAGRAM (Diagram 15) 3-60

Section 4 PERFORMANCE CHECK PROCEDURE

INTRODUCTION 4-1
TEST EQUIPMENT REQUIRED .. 4-1
PERFORMANCE CHECK INTERVAL 4-1
PREPARATION 4-1
INDEX TO PERFORMANCE CHECK PROCEDURE 4-4
DISPLAY 4-5
VERTICAL 4-6
TRIGGERING 4-14
HORIZONTAL 4-18
MEASUREMENT CURSORS 4-23
EXTERNAL Z-AXIS, PROBE ADJUST, AND AUTO SETUP FUNCTIONS 4-24

Section 5 ADJUSTMENT PROCEDURE

INTRODUCTION 5-1
PURPOSE 5-1
TEST EQUIPMENT REQUIRED 5-1
LIMITS AND TOLERANCES 5-1
PARTIAL PROCEDURES 5-1
INTERNAL ADJUSTMENTS AND ADJUSTMENT INTERACTION .. 5-1
PREPARATION FOR ADJUSTMENT 5-3
INDEX TO ADJUSTMENT PROCEDURE 5-3
POWER SUPPLY, DISPLAY, AND Z-AXIS 5-4
INITIAL CONTROL SETTINGS 5-4
PROCEDURE 5-4
VERTICAL 5-7
INITIAL CONTROL SETTINGS 5-7
PROCEDURE 5-7

http://www.ebaman.com

TABLE OF CONTENTS (cont)

Page

HORIZONTAL 5-12
INITIAL CONTROL SETTINGS 5-12
PROCEDURE 5-12
SELF CHARACTERIZATION 5-15
PROCEDURE 5-15

Section 6 MAINTENANCE

STATIC-SENSITIVE COMPONENTS 6-1
PREVENTIVE MAINTENANCE 6-2
INTRODUCTION 6-2
INSPECTION AND CLEANING 6-2
LUBRICATION 6-4
SEMICONDUCTOR CHECKS 6-4
PERIODIC READJUSTMENT 6-4
TROUBLESHOOTING 6-5
INTRODUCTION 6-5
TROUBLESHOOTING AIDS 6-5
TROUBLESHOOTING EQUIPMENT 6-6
TROUBLESHOOTING TECHNIQUES 6-6
INTERNAL TESTING CAPABILITIES 6-10
SERVICE MODE 6-11
TROUBLESHOOTING HINTS BY DIAGRAM 6-18
TROUBLESHOOTING MEASUREMENT ERRORS 6-25
CORRECTIVE MAINTENANCE ... 6-32
INTRODUCTION 6-32
MAINTENANCE PRECAUTIONS 6-32
OBTAINING REPLACEMENT PARTS 6-32

Page

REPACKAGING FOR SHIPMENT 6-33
MAINTENANCE AIDS 6-33
INTERCONNECTIONS 6-33
LITHIUM BATTERY (B2501) .. 6-35
TRANSISTORS AND INTEGRATED CIRCUITS 6-35
SOLDERING TECHNIQUES ... 6-35
REMOVAL AND REPLACEMENT INSTRUCTIONS 6-36

Section 7 OPTIONS

INTRODUCTION 7-1
INTERNATIONAL POWER CORDS 7-1
OPTION 1R RACKMOUNTED INSTRUMENT 7-1

Section 8 REPLACEABLE ELECTRICAL PARTS

Section 9 DIAGRAMS

Section 10 REPLACEABLE MECHANICAL PARTS

CHANGE INFORMATION

Diagnostic Information:

Internal Testing Capabilities 6-10
Power-on Test Failure codes 6-10
Service Mode 6-11
Service Menu Selections 6-12
Diagnose Routines 6-15
Troubleshooting Hints by Diagram 6-18
Measurement Processor I/O Memory Map 6-23
Measurement Error Troubleshooting Hints 6-25

http://www.ebaman.com

LIST OF ILLUSTRATIONS

		Page
	The 2245A Portable Oscilloscope	viii
1-1	Maximum input voltage vs frequency derating curve for the CH 1, CH 2, CH 3, or CH 4 input connectors	1-11
1-2	Dimensional outline drawing, standard cabinet	1-17
1-3	Dimensional outline drawing, rackmount cabinet	1-18
2-1	Optional power cords	2-1
3-1	Simplified block diagram	3-2
3-2	Display Sequencer IC (SLIC, U600) pin out diagram	3-19
3-3	Readout interface relative signal timing	3-27
3-4	Trigger Logic IC (FLIC, U602) pin out diagram	3-28
3-5	Simplified Sweep circuit	3-34
3-6	A Sweep Start circuit waveforms	3-38
3-7	Simplified diagram of the DC Restorer circuitry	3-42
3-8	Display addresses	3-49
3-9	Character pixel arrangement	3-52
3-10	Power Supply block diagram	3-56
3-11	Preregulator switching waveforms	3-59
5-1	Areas of waveform affected by HF compensation adjustments	5-10
5-2	2 ns Timing	5-13
6-1	Power-on test failure codes	6-10
6-2	Main SERVICE MENU	6-11
6-3	SERVICE MENU with DIAGNOSE choice selected	6-12
6-4	Main board removal	6-42
6-5	Delay-line connections to top of Main board	6-43
9-1	Color codes for resistors.	
9-2	Semiconductor lead configurations.	
9-3	Locating components on schematic diagrams and circuit board illustrations.	
9-4a	Detailed block diagram—part 1.	
9-4b	Detailed block diagram—part 2.	
9-5	A10—Main board.	
9-6	Hybrid pin identifiers.	
9-7	A8—CRT control board.	
9-8	A16—Processor board.	
9-9	A14—Switch board.	
9-10	A12—Potentiometer board.	
9-11	A18—Power supply board.	
9-12	A10—Main board adjustment locations.	

http://www.tbaman.com

LIST OF TABLES

		Page
1-1	Electrical Characteristics	1-2
1-2	Environmental Characteristics	1-12
1-3	Mechanical Characteristics	1-14
3-1	Shift Register 0 Bit Assignment	3-10
3-2	Input Coupling Control Bit States	3-11
3-3	CH 1 and CH 2 Attenuator and Gain Control Bit States	3-11
3-4	CH 2 INVERT Control Bit	3-12
3-5	CH 3 and CH 4 Gain Control Bit	3-12
3-6	Trigger Selection Logic	3-15
3-7	Display Sequencer (U600) Control Bit Assignments	3-20
3-8	A Trigger Source Select Bits	3-21
3-9	Horizontal Display Mode Select Bits	3-21
3-10	Shift Register 1 Control Bit Data	3-22
3-11	Trigger Source Select	3-23
3-12	Vertical MODE Select	3-23
3-13	Horizontal MODE Select	3-23
3-14	Holdoff Counter Encoding	3-24
3-15	Display Sequencer Channel Select Logic Bits	3-25
3-16	Horizontal and Vertical Display Response	3-26
3-17	Trigger Logic IC Addressing Logic	3-29
3-18	Control Register Signal-bit Names	3-30
3-19	Delay Mode Selection Control Bits	3-30
3-20	Peak Volts Detection Mode Logic	3-30
3-21	Z-Axis Switching Logic	3-32
3-22	A Sweep Timing Selections	3-36
3-23	B Sweep Timing Selections	3-37
3-24	HD0 and HD1 Logic	3-39
3-25	Front-Panel Multiplexer Channel Select Bits	3-43
3-26	Measurement Processor Signals	3-46
3-27	Position Enable Bit Assignment	3-50
3-28	Field and Mixer Attribute Bit Assignment	3-51
3-29	Display Possibilities	3-53
3-30	Possible Signal Conditions to U2416	3-53
4-1	Test Equipment Required	4-2
4-2	Signal-to-Graticule Accuracy	4-8
4-3	Settings for Timing Accuracy Checks	4-20
4-4	Delay Time Accuracy	4-21
5-1	Adjustment Interactions	5-2
5-2	Power Supply Voltage Limits	5-5
6-1	Relative Susceptibility to Static-Discharge Damage	6-1
6-2	External Inspection Checklist	6-3
6-3	Internal Inspection Checklist	6-3
6-4	Power Supply Voltage and Ripple Limits	6-8
6-5	SERVICE MENU Selections	6-12
6-6	DIAGNOSE ROUTINES	6-15
6-7	Horizontal Display State Logic	6-21
6-8	Measurement Processor I/O Memory Map	6-23
6-9	Measurement Error Troubleshooting Hints	6-25
6-10	Maintenance Aids	6-34
9-1	Signal Line Locations.	

http://www.obaman.com

OPERATORS SAFETY SUMMARY

The safety information in this summary is for operating personnel. Warnings and cautions will also be found throughout the manual where they apply.

Terms in this Manual

CAUTION statements identify conditions or practices that could result in damage to the equipment or other property.

WARNING statements identify conditions or practices that could result in personal injury or loss of life.

Terms as Marked on Equipment

CAUTION indicates a personal injury hazard not immediately accessible as one reads the markings, or a hazard to property, including the equipment itself.

DANGER indicates a personal injury hazard immediately accessible as one reads the marking.

Symbols in this Manual



This symbol indicates where applicable cautionary or other information is to be found. For maximum input voltage see Table 1–1.

Symbols as Marked on Equipment



DANGER—High voltage.



Protective ground (earth) terminal.



ATTENTION—Refer to manual.

Power Source

This product is intended to operate from a power source that does not apply more than 250 V rms between the supply conductors or between either supply conductor and ground. A protective ground connection, by way of the grounding conductor in the power cord, is essential for safe operation.

Grounding the Product

This product is grounded through the grounding conductor of the power cord. To avoid electrical shock, plug the power cord into a properly wired receptacle before making any connections to the product input or output terminals. A protective ground connection, by way of the grounding conductor in the power cord, is essential for safe operation.

Danger Arising From Loss of Ground

Upon loss of the protective-ground connection, all accessible conductive parts, including knobs and controls that may appear to be insulating, can render an electric shock.

http://www.ebaman.com

Use the Proper Power Cord

Use only the power cord and connector specified for your product.

Use only a power cord that is in good condition.

For detailed information on power cords and connectors, see Figure 2–1.

Use the Proper Fuse

To avoid fire hazard, use only a fuse of the correct type, voltage rating and current rating as specified in the parts list for your product.

Do Not Operate in an Explosive Atmosphere

To avoid explosion, do not operate this instrument in an explosive atmosphere.

Do Not Remove Covers or Panels

To avoid personal injury, do not remove the product covers or panels. Do not operate the product without the covers and panels properly installed.

SERVICING SAFETY SUMMARY

FOR QUALIFIED SERVICE PERSONNEL ONLY

Refer also to the preceding Operators Safety Summary

Do Not Service Alone

Do not perform internal service or adjustment on this product unless another person capable of rendering first aid and resuscitation is present.

Use Care When Servicing With Power On

Dangerous voltages exist at several points in this product. To avoid personal injury, do not touch exposed connections or components while power is on.

Disconnect power before removing protective panels, soldering, or replacing components.

Power Source

This product is intended to operate from a power source that does not apply more than 250 volts rms between the supply conductors or between either supply conductor and ground. A protective ground connection by way of the grounding connector in the power cord is essential for safe operation.

http://www.ebaman.com

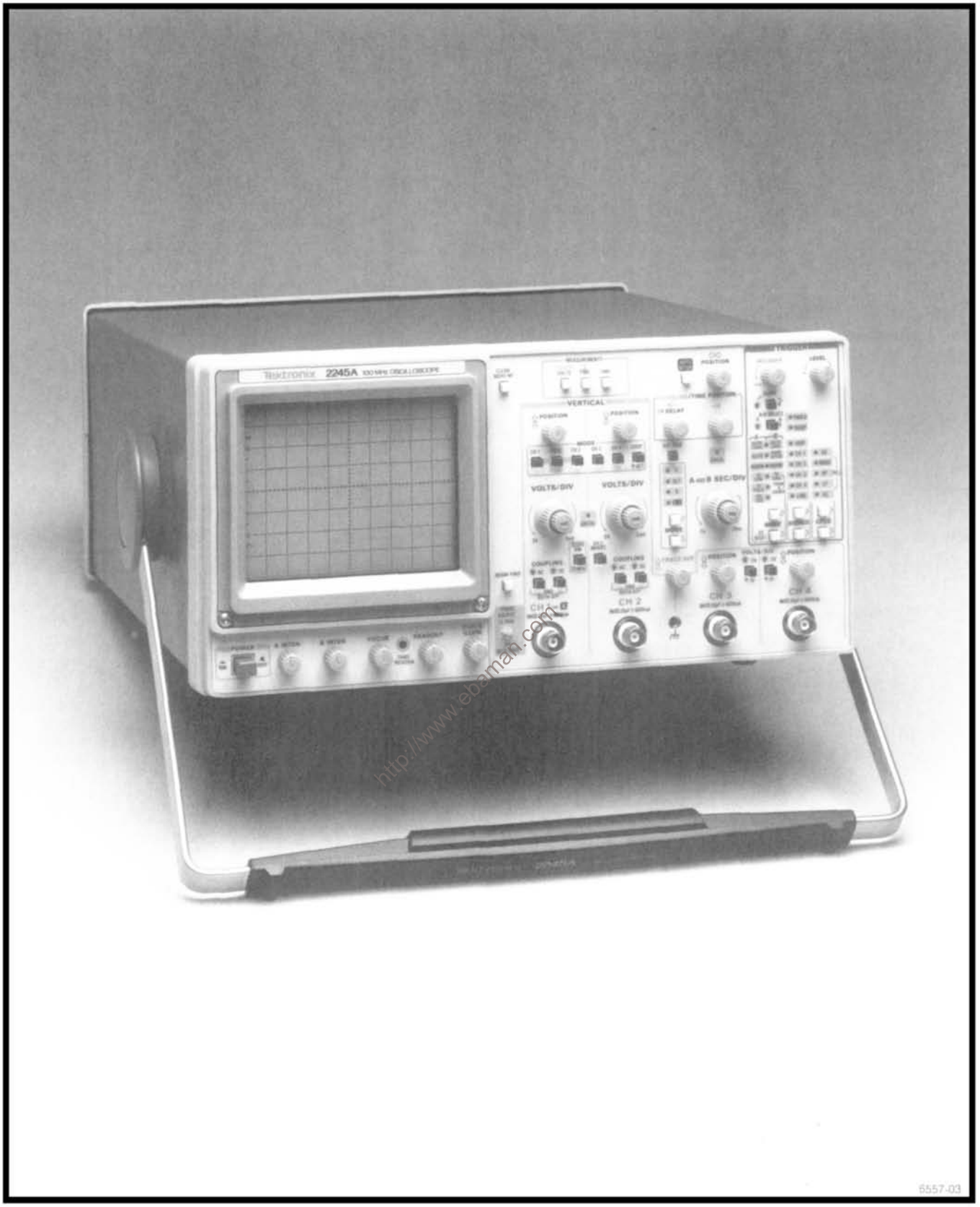
Tektronix 2245A 100 MHz OSCILLOSCOPE
VERTICAL
VOLTS/DIV
VOLTS/DIV
A and B SEC/Div
CH 1
CH 2
CH 3
CH 4
5557-03

SPECIFICATION

DESCRIPTION

The TEKTRONIX 2245A is a 100 MHz, four-channel, dual-sweep, portable oscilloscope for general-purpose use. A microprocessor-based operating system controls most of the functions in the instrument, including a voltage and time cursor measurement system and a single-button automatic front-panel setup feature. A menu-driven service mode provides for configuring of single-sweep readout displays, internal calibration, and servicing diagnostics.

The vertical deflection system has four input channels. Two channels have 11 basic deflection factors from 2 mV to 5 V per division, and two channels have two basic deflection factors of 0.1 V and 0.5 V per division. Basic deflection factors can be extended with attenuator probes. VOLTS/DIV readouts are switched to display the correct vertical scale factors when properly coded probes are connected to the vertical input connectors.

The horizontal deflection system provides single, dual, or delayed sweeps from 0.5 s to 20 ns per division (delayed sweep, 5 ms to 20 ns per division). The trigger system provides stable triggering over the full bandwidth of the vertical deflection system.

Alphanumeric crt readouts of the vertical and horizontal scale factors are displayed at the bottom of the screen. On-screen vertical and horizontal cursors provide accurate voltage, time, and frequency measurements; measurement values are displayed at the top of the crt.

The measurement system provides direct readout of delta voltage, delta time, and frequency from positionable cursors. Delay-time and delta-delay measurements for time and frequency are available in ALT and B Horizontal Modes.

By pressing a single button (AUTO SETUP), the front-panel controls can be set up to produce a usable waveform display based on the voltage and time characteristics of the input signals.

ACCESSORIES

The following items are standard accessories shipped with the 2245A instrument:

2 Probes, 10X, 1.5 meter, with accessories
1 Power cord
1 Power cord clamp
1 Operators manual
1 Reference guide
1 Crt filter, blue plastic (installed)
1 Fuse, 2A, 250 V, slow-blow
1 Accessory pouch, Ziploc

Refer to the Accessories page at the back of this manual for part numbers and further information about both standard and optional accessories. Available options are described in Section 7. Your Tektronix representative, local Tektronix Field Office, or Tektronix products catalog can provide additional information on options and accessories.

http://www.abaman.com

PERFORMANCE CONDITIONS

The electrical characteristics in Table 1-1 apply when the 2245A has been calibrated at an ambient temperature between +20°C and +30°C, has had a warmup period of at least 20 minutes, and is operating in an ambient temperature between -10°C and +55°C (unless otherwise noted).

Items listed in the "Performance Requirements" column are verifiable qualitative or quantitative limits that define the measurement capabilities of the instrument.

Environmental specifications of the 2245A are listed in Table 1-2, and mechanical specifications are in Table 1-3.

RECOMMENDED CALIBRATION SCHEDULE

To ensure accurate measurements, check the performance of this instrument ever 2000 hours of operation, or once each year if used infrequency. When components are replaced, affected circuits may have to be readjusted.

Table 1-1
Electrical Characteristics

CHARACTERISTICS	PERFORMANCE REQUIREMENTS
VERTICAL DEFLECTION SYSTEM — CH 1 AND CH 2	
Deflection Factor	
Range	2 mV/div to 5 V/div in 1-2-5 sequence.[a]
Accuracy (includes ADD MODE and CH 2 INVERT)	
15°C to 35°C	Within ± 2%.
-10°C to 15°C and 35°C to 55°C	Within ± 3%.[a]
Variable Range	Increases deflection factor by at least 2.5:1.
Frequency Response (-3 dB bandwidth)	
-10°C to 35°C	
5 mV/div to 5 V/div	Dc to 100 MHz (at the input BNC and at the probe tip).
2 mV/div	Dc to 90 MHz (at the input BNC and at the probe tip).
35°C to 55°C	Dc to 90 MHz (at the input BNC and at the probe tip). [a]
AC Coupled Lower -3 dB Point	
1X Probe	10 Hz or less.
10X Probe	1 Hz or less.
Step Response (5-division step)	
Rise Time	
-10°C to 35°C	
5 mV/div to 5 V/div	3.5 ns or less (calculated).[a]
2 mV/div	3.9 ns or less (calculated).[a]
35°C to 55°C	3.9 ns or less (calculated).[a]
Delay Match (CH 1 to CH 2)	Less than 200 ps difference.

[a] **Performance Requirement not checked in manual.**

http://www.ebaimanuals.com

Table 1-1 (cont)
Electrical Characteristics

CHARACTERISTICS	PERFORMANCE REQUIREMENTS
Common Mode Rejection Ratio (CMRR)	At least 10:1 at 50 MHz for signals of eight divisions or less with VOLTS/DIV VAR adjusted for best CMRR at 50 kHz.
Channel Isolation (attenuation of deselected channel)	
2 mV/Div to 0.5 V/Div	10 MHz: 50 dB or more; 100 MHz: 34 dB or more
	Channel isolation tested with eight-division input signal.
Trace Shift as VAR VOLTS/DIV Is Turned	1 division or less.
Invert Trace Shift	1 division or less.
Trace Shift Between VOLTS/DIV Switch Positions	0.2 division or less.
Trace Shift Between GND and DC Input Coupling	
-10 °C to 35 °C	Less than 0.5 mV.
35 °C to 55 °C	Less than 2 mV.[a]
Position Range	At least ±11 divisions from graticule center.
Input Characteristics	
Resistance	1 MΩ ±0.15%.[a]
Capacitance	20 pF ±1 pF.[a]
Capacitance Match Between Any Two VOLTS/DIV Settings	±0.5 pF.
Maximum Input Volts ⚠	400 V (dc + peak ac); 800 V p-p at 10 kHz or less.[a] (See Figure 1-1.)

[a] Performance Requirement not checked in manual.

http://www.tebarman.com

Table 1-1 (cont)
Electrical Characteristics

CHARACTERISTICS	PERFORMANCE REQUIREMENTS
VERTICAL DEFLECTION SYSTEM — CH 3 AND CH 4	
Deflection Factor	
Range	0.1 V per division and 0.5 V per division.[a]
Accuracy	
15°C to 35°C	Within ±2%.
−10°C to 55°C	Within ±3%.
Frequency Response (−3 dB bandwidth)	
−10°C to 35°C	Dc to 100 MHz (at the input BNC and at the probe tip).
35°C to 55°C	Dc to 90 MHz (at the input BNC and at the probe tip).[a]
Step Response (5-division step)	
Rise Time	
−10°C to 35°C	3.5 ns or less.[a]
35°C to 55°C	3.9 ns or less.[a]
Delay Match (CH 3 to CH 4)	Less than 200 ps difference.
Trace Shift Between VOLTS/DIV Settings	1 division or less.
Position Range	At least ±11 divisions from graticule center.
Channel Isolation (attenuation of deselected channel)	34 dB or more at 100 MHz. Channel isolation tested with eight-division input signal.
Input Characteristics	
Resistance	1 MΩ ±1.0%.[a]
Capacitance	20 pF ±1 pF.[a]
Maximum Input Volts ⚠	400 V (dc + peak ac); 800 V p-p at 10 kHz or less.[a] (See Figure 1-1).

[a] Performance Requirement not checked in manual.

http://www.ebaman.com

Table 1-1 (cont)
Electrical Characteristics

CHARACTERISTICS	PERFORMANCE REQUIREMENTS
VERTICAL DEFLECTION SYSTEM — ALL CHANNELS	
Bandwidth Limit (-3 dB bandwidth)	20 MHz ±15%.
Low-Frequency Linearity (relative to center screen)	Within ±5%. Linearity is measured by positioning a two-division test signal anywhere on screen and noting the amplitude change.
TRACE SEP Control Position Range	At least ±4 divisions.
CHOP Mode Clock Rate	625 kHz ±10%.[a]
Delay Match (CH 1 or CH 2 to CH 3 or CH 4)	Less than 200 ps difference.
HORIZONTAL DEFLECTION SYSTEM	
Sweep Range A Sweep	0.5 s/div to 20 ns/div in a 1-2-5 sequence.[a] X10 magnifier extends maximum sweep speed to 2 ns/div.
B Sweep	5.0 ms/div to 20 ns/div in a 1-2-5 sequence.[a] X10 magnifier extends maximum sweep speed to 2 ns/div.
Accuracy	Sweep Accuracy applies over the center eight divisions. Excludes the first 1/4 division or 25 ns from the start of the magnified sweep and anything beyond the 100th magnified division.

	Unmagnified	Magnified
15°C to 35°C	±2%	±3%
-10°C to 15°C and 35°C to 55°C	±3%	±4%

[a] Performance Requirement not checked in manual.

http://www.tebanon.com

Table 1-1 (cont)
Electrical Characteristics

CHARACTERISTICS	PERFORMANCE REQUIREMENTS
HORIZONTAL DEFLECTION SYSTEM (cont)	
Sweep Linearity (relative to center two displayed divisions)	± 5%.
POSITION Control Range	
Normal Displays	Able to move the start of the sweep to the right of the center vertical graticule; able to move a time mark corresponding to the end of the tenth division of an unmagnified sweep to the left of the center graticule.
X-Y Displays	At least ±13 divisions.[a]
X10 Magnifier	Expands the normal sweep by ten times around that portion of the sweep positioned at the center vertical graticule line.[a]
Registration (X10 to X1)	0.5 division or less shift.
Variable Control Range	Continuously variable between calibrated SEC/DIV settings. Extends both the A and B sweep time per division by at least a factor of 2.5.
Sweep Length	Greater than 10 divisions.
Delay Time	
Delay Control Range	Less than 0.1 division to 10 times the A SEC/DIV switch setting. Maximum value does not exceed end of the A sweep.
Jitter	1 part in 20,000, or less, peak-to-peak, during a two-second time interval.
Delta Time	
Delta Control Range	0 to greater than 9.9 divisions to the right of setting of DELAY control, but maximum value does not exceed end of the A sweep.

[a] Performance Requirement not checked in manual.

http://www.ebomanuals.com

Table 1-1 (cont)
Electrical Characteristics

CHARACTERISTICS	PERFORMANCE REQUIREMENTS
A AND B TRIGGER	
Sensitivity—CH 1 through CH 4: AUTO LEVEL, AUTO NORM AND SINGLE SEQUENCE	Trigger sensitivity is defined as the minimum peak-to-peak sine-wave trigger signal amplitude required to show the test signal with horizontal jitter of less than 3.0% of one period (p-p viewed over two seconds).
COUPLING	
DC	0.35 division from dc to 25 MHz, increasing to 1.0 division at 150 MHz (100 MHz in AUTO LEVEL).
NOISE REJECT	1.4 division from dc to 25 MHz; increasing to 2.2 division at 100 MHz. 0.5 division or less will not trigger.
HF REJECT	0.35 division from dc to 50 kHz; attenuates signals above upper -3 dB cutoff frequency of 70 kHz.
LF REJECT	0.35 division from 100 kHz to 25 MHz, increasing to 1.0 division at 150 MHz (100 MHz in AUTO LEVEL); attenuates signals below the lower -3 dB cutoff frequency of 50 kHz.
AC	0.35 division from 50 Hz to 25 MHz, increasing to 1.0 division at 150 MHz (100 MHz in AUTO LEVEL); attenuates signals below the lower -3 dB cutoff frequency of 20 Hz.
TV LINE, TV FIELD	0.5 division of composite sync will achieve a stable display.
AUTO LEVEL and AUTO MODE Trigger Low-Frequency Limit	10 Hz.
LEVEL Control Range	
AUTO, NORM, and SGL SEQ	± 20 divisions referred to the appropriate vertical input. This range is sufficient to allow triggering at any point on a displayed waveform for all modes except "ADD". In ADD, the combined range of the two position controls exceeds the trigger level range, making it possible (though unlikely) to pull a signal on screen for display but fail to trigger on it due to insufficient trigger level range.
AUTO LEVEL	Does not exceed the peak-to-peak amplitude of the trigger signal that was present when the AUTO LEVEL limits were set. [a]

[a] Performance Requirement not checked in manual.

http://www.ebsman.com

Table 1-1 (cont)
Electrical Characteristics

CHARACTERISTICS	PERFORMANCE REQUIREMENTS
TRIGGER LEVEL READOUT Accuracy	± (0.3% of reading + 10% of one vertical division).
HOLDOFF Control Range	Increases A Sweep holdoff time by at least a factor of 10.
FUNCTIONS WITH DIGITAL READOUT	
	Specifications for functions with digital readout are valid only when the ambient temperature is within ±10°C of the temperature at the time of the last SELF CAL. For maximum performance, a recent SELF CAL is recommended.
CURSOR FUNCTIONS	
TIME (manually positioned cursors)	
Accuracy	± (0.5% of reading + 2% of the SEC/DIV setting).
1/TIME (manually positioned cursors)	
Accuracy	Readout calculated from TIME cursor positions.
CURSOR VOLTS (manually positioned cursors)	
Accuracy	± (0.5% of reading + 2% of the VOLTS/DIV setting + high-frequency display errors).
Delay Accuracy, A Sweep Trigger Point to Start of B Sweep	± (0.5% of reading + 5% of one division of the A Sweep + 25 ns).

http://www.ebman.com

Table 1-1 (cont)

Electrical Characteristics

CHARACTERISTICS	PERFORMANCE REQUIREMENTS
X-Y OPERATION	
Deflection Factors	Same as Vertical deflection system with the VOLTS/DIV variable controls in calibrated detent position.[a]
Accuracy	
Y Axis	
15°C to 35°C	Within ± 2%.
-10°C to 15°C and 35°C to 55°C	Within ± 3%.[a]
X Axis	
15°C to 35°C	Within ± 3%.
-10°C to 15°C and 35°C to 55°C	Within ± 4%.[a]
Horizontal (X-Axis) -3 dB Bandwidth	3 MHz or more.
Phase Match (DC Coupled)	± 3 degrees from dc to 50 kHz.
EXTERNAL Z-AXIS INPUT	
Active Region Lower Threshold (intensity decreases above this voltage)	+1.8 volts or less.
Signal Required to Modulate an A or B Trace of Normal Intensity	+3.8 volts or less (usable frequency: Dc to 10 MHz). External Z-Axis signal does not affect the readout or the intensified zone intensity.
Maximum Input Voltage ⚠	30 V (dc + peak ac); 30 V p-p ac at 1 kHz or less.[a]
Input Loading	Represents less than one LSTTL load.[a]

[a] Performance Requirement not checked in manual.

http://www.ebaman.com

Table 1-1 (cont)
Electrical Characteristics

CHARACTERISTICS	PERFORMANCE REQUIREMENTS
PROBE ADJUST OUTPUT	
Overshoot (rising and falling edge)	0.1% or less.
Output Voltage on PROBE ADJUST Jack	0.5 V ±2% into 1 MΩ load.
Repetition Rate	1 kHz ± 25%.
FRONT PANEL SETUP MEMORY	
Battery	3.0 V, 1200 mAH, Type BR-2/3AE2P, Lithium.[a] **WARNING**—*To avoid personal injury, have battery replaced only by a qualified service person who understands proper handling and disposal procedures for Lithium batteries.*
Battery Shelf Life	At least five years.[a]
Data Retention Time	At least three years or the remainder of battery shelf life, whichever is less.[a]
POWER SOURCE	
Line Voltage Range	90 Vac to 250 Vac.[a]
Line Frequency	48 Hz to 445 Hz.[a]
Line Fuse	2 A, 250 V, slow blow.[a]
Maximum Power Consumption	100 Watts (155 VA).[a]
CRT DISPLAY	
Display Area	8 by 10 cm.[a]
Geometry	
Vertical	±1/2 minor (0.1 div) at 8 by 8 cm centered area.
Horizontal	±1/2 minor (0.1 div) at 8 by 10 cm centered area.
Trace Rotation Range	Adequate to align trace with center horizontal graticule line.
Standard Phosphor	P31.[a]
Y-Axis Orthogonality	0.1 division or less, over eight vertical divisions. No adjustment.
Nominal Accelerating Voltage	16 kV.[a]

[a] **Performance Requirement not checked in manual.**

http://www.scanman.com

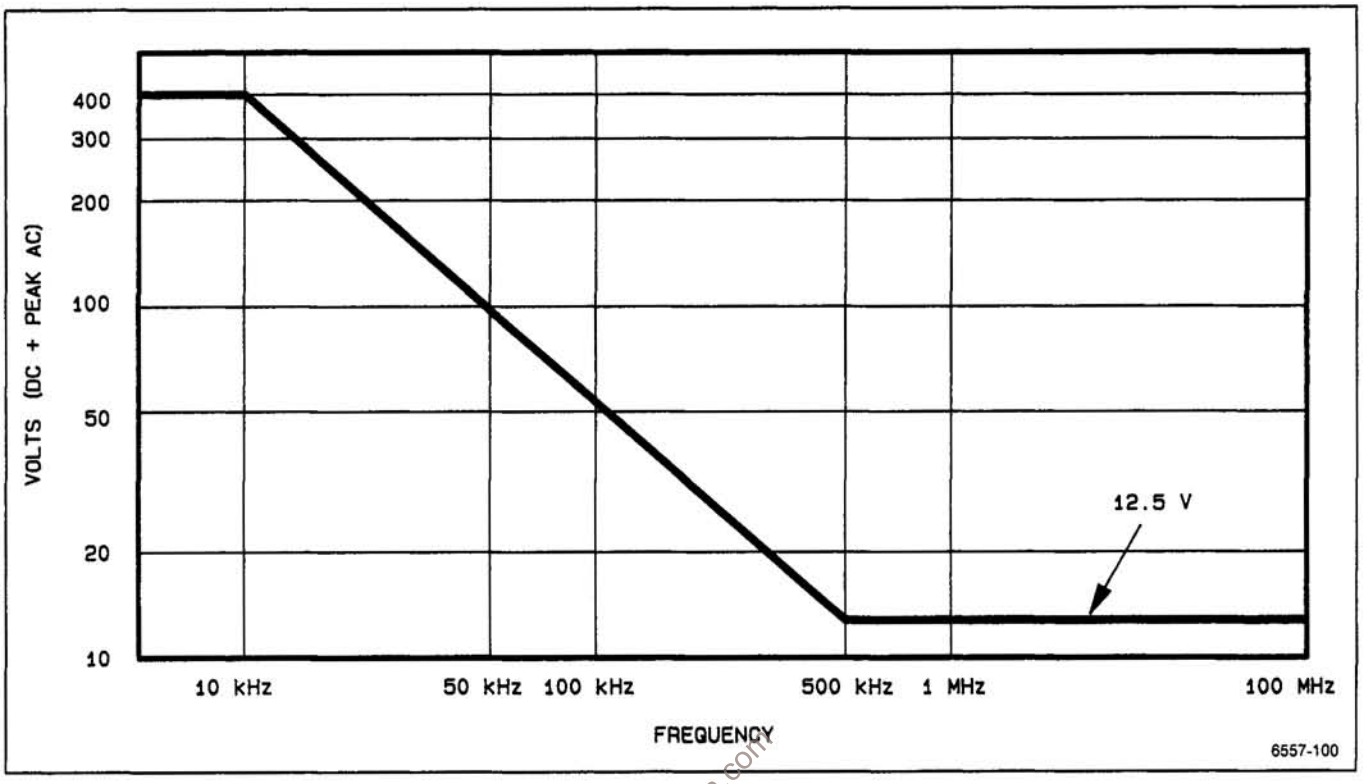

Figure 1–1. Maximum input voltage vs frequency derating curve for the CH 1, CH 2, CH 3, or CH 4 input connectors.

http://www.ebaman.com

Table 1-2
Environmental Characteristics

CHARACTERISTICS	DESCRIPTION
	STANDARD INSTRUMENT
Environmental Requirements	Instrument meets or exceeds the environmental requirements of MIL-T-28800D for Type III, Class 3, Style D equipment, as described below.[a]
Temperature	
Operating	-10°C to +55°C (+14°F to +131°F).
Non-Operating	-51°C to +71°C (-60°F to +160°F). Tested to MIL-T-28800D paragraphs 4.5.5.1.3 and 4.5.5.1.4, except in 4.5.5.1.3, steps 4 and 5 (-10°C operating test) are performed ahead of step 2 (-51°C non-operating test). Equipment shall remain off upon return to room ambient during step 6. Excessive condensation shall be removed before operating during step 7.
Altitude	
Operating	To 7,620 m (25,000 ft). Maximum operating temperature decreases 1°C per 1000 ft above 5000 ft.
Non-Operating	To 15,240 m (50,000 ft). Exceeds requirements of MIL-T-28800D paragraph 4.5.5.2.
Humidity (operating and non-operating)	Five cycles (120 hours) referenced to MIL-T-28800D paragraph 4.5.5.1.2.2, for Type III, Class 3 instruments. Non-operating and operating at 95%, -0% to +2% relative humidity. Operating at +30°C and +55°C for all modes of operation. Non-operating at +30°C to +60°C.
Radiated and Conducted Emission Required per VDE 0871	Meets Category B.
Electrostatic Discharge	Conforms to Tektronix Standard 062-2862-00. Withstands discharge of up to 20 kV. Test performed with probe containing a 500 pF capacitor with 1 kΩ series resistance charged to the test voltage.
Vibration (operating)	15 minutes along each of 3 major axes at a total displacement of 0.25 inch p-p (4 g at 55 Hz) with frequency varied from 10 Hz to 55 Hz in 1-minute sweeps. Hold for 10 minutes at 55 Hz in each of the three major axes. All major resonances must be above 55 Hz.

[a] Performance not checked in manual.

http://www.ebamanuals.com

Table 1-2 (cont)
Environmental Characteristics

CHARACTERISTICS	DESCRIPTION
Bench Handling Test (cabinet on and cabinet off)	MIL-STD-810D, Method 516.2, Procedure VI (MIL-T-28800D, Paragraph 4.5.5.4.3).
Transportation	
Packaged Vibration Test	Meets the limits of the National Safe Transit Association test procedure 1A-B-1; excursion of 1 inch p-p at 4.63 Hz (1.1 g) for 30 minutes on the bottom and 30 minutes on the side (for a total of 60 minutes).
Package Drop Test	Meets the limits of the National Safe Transit Association test procedure 1A-B-2; 10 drops of 36 inches.

http://www.ebaman.com

Table 1-3
Mechanical Characteristics

CHARACTERISTICS	DESCRIPTION
STANDARD INSTRUMENT	
Weight	
With Front Cover, Accessories, and Accessories Pouch (without manual)	8.9 kg (19.5 lb).
With Power Cord	7.9 kg (17.3 lb).
Shipping Weight (Domestic)	11.7 kg (25.8 lb).
Overall Dimensions	See Figure 1-2, Dimensional drawing.
Height	
With Feet and Accessories Pouch (empty)	Approx. 176.5 mm (6.95 in).
Without Accessories Pouch	164 mm (6.44 in).
Width (with handle)	362 mm (14.25 in).
Depth	
With Front Cover on	445.3 mm (17.53 in).
With Handle Extended	521 mm (20.53).
Cooling	Forced air circulation; no air filter.
Finish	Tek Blue, painted finish on pebble-grain aluminum cabinet.
Construction	Aluminum alloy chassis. Plastic-laminate front panel.

http://www.ebaman.com

Table 1-3 (cont)
Mechanical Characteristics

CHARACTERISTICS	DESCRIPTION
RACKMOUNT INSTRUMENT	
Weight	
With Power Cord	10.0 kg (22.0 lb).
Shipping Weight	
Domestic, includes manual	14.2 kg (31.3 lb).
Overall Dimensions	See Figure 1-3, Dimensional drawing.
Height	
Overall	168 mm (6.6 in).
Center of mounting rail to bottom of cabinet	89 mm (3.5 in).
From cabinet top or bottom to respective front-panel mounting holes	38 mm (1.5 in).
Between front-panel mounting holes	102 mm (4.0 in).
Width	
Overall	483 mm (19.0 in).
Between mounting hole centers	464 mm (18.3 in).
Between outer edges of mounting rails	427 mm (16.8 in).
Between handle centers	450 mm (17.7 in).
Depth	
Overall	516 mm (20.35 in).
Front panel to rear of mounting rail (inside)	465 mm (18.3 in).
Front panel to rear of mounting rail (outside)	472 mm (18.6 in).
Handles	44 mm (1.75 in).

http://www.ebanman.com

Table 1-3 (cont)
Mechanical Characteristics

CHARACTERISTICS	DESCRIPTION
Required Clearance dimensions	
Height	≥178 mm (7 in).
Width	≥448 mm (17-5/8 in).
Depth	≥508 mm (20 in).
Cooling	Forced air circulation; no air filter.
Construction	Aluminum alloy chassis, front-panel frame, and rear support. Plastic-laminate front panel.

http://www.ebaman.com

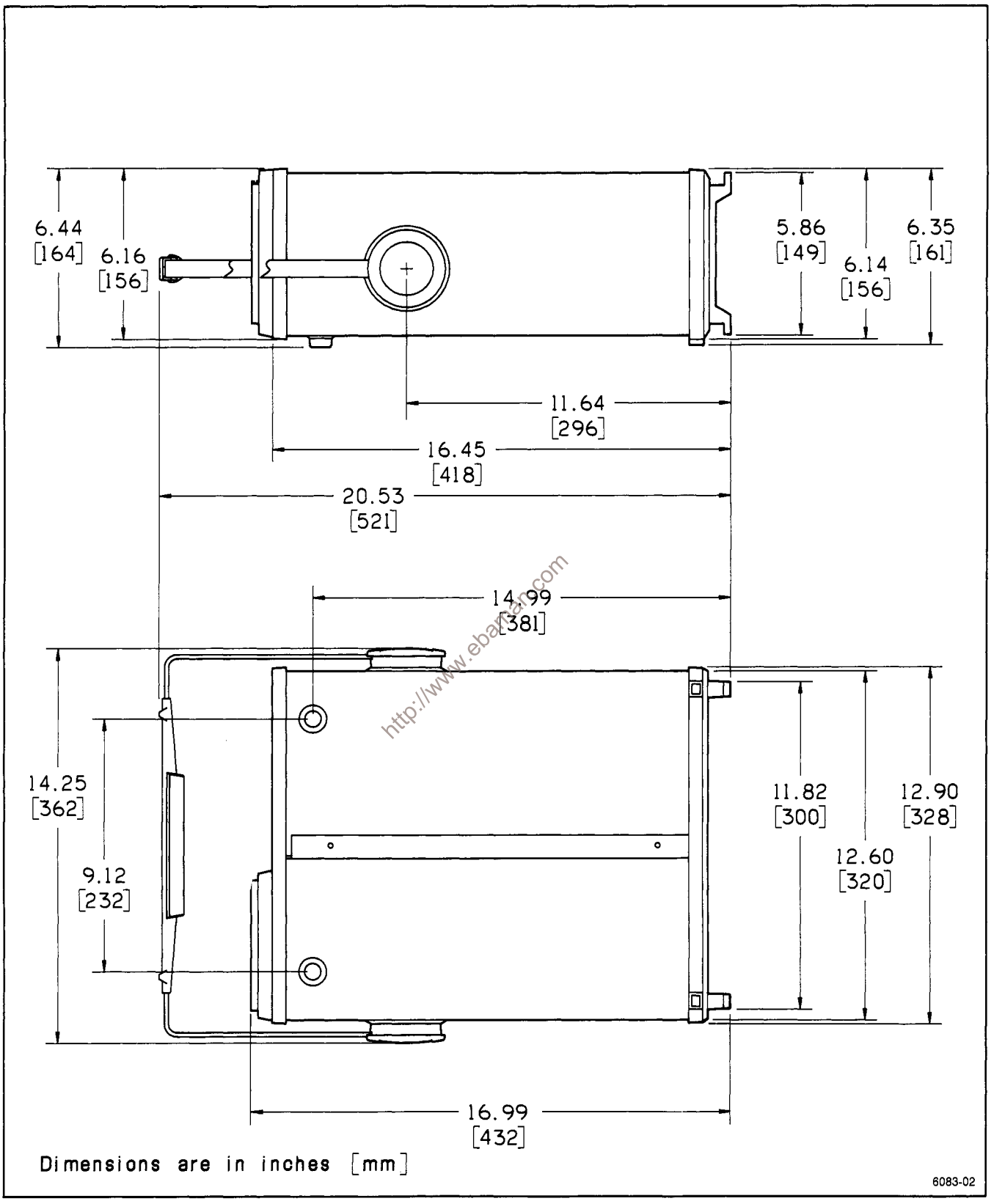

Figure 1–2. Dimensional outline drawing, standard cabinet.

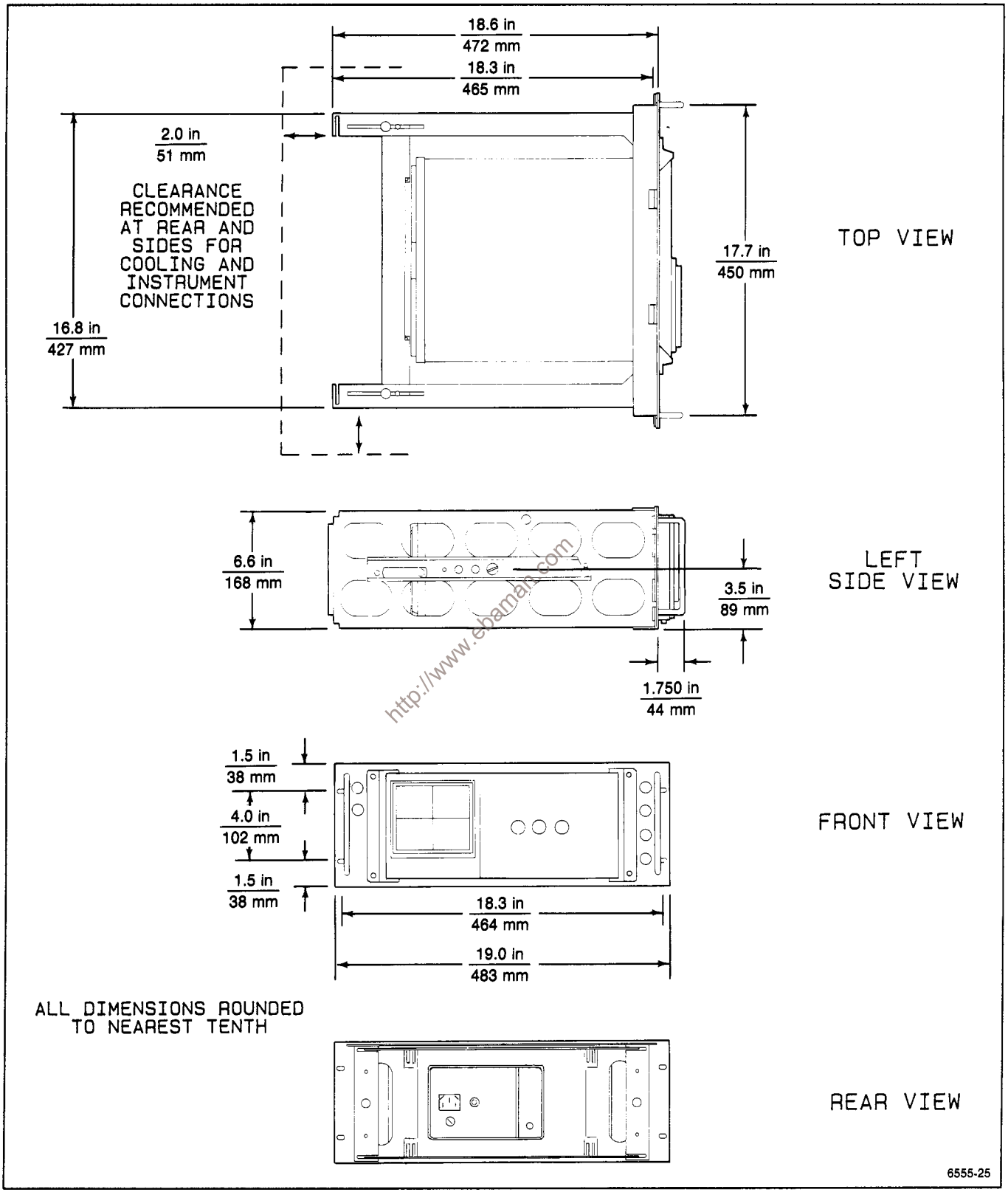

http://www.ebaman.com

Figure 1–3. Dimensional outline drawing, rackmount cabinet.

PREPARATION FOR USE

SAFETY

This section tells how to prepare for and to proceed with the initial start-up of the instrument.

Refer to the Safety Summaries at the front of this manual for power source, grounding, and other safety information about the use of the instrument. Before connecting the 2245A to a power source, read this section and the Safety Summaries.

LINE VOLTAGE AND POWER CORD

The 2245A operates on line voltages from 90 to 250 V with line frequencies ranging from 48 to 440 Hz. No line voltage selection is necessary. Instruments are shipped with the power cord that was requested on the order. The power cord must match the power-source outlet; if it does not, contact your Tektronix representative or local Tektronix Field Office. See Figure 2-1 for optional power cords available.

Plug Configuration	Usage	Line Voltage	Reference Standards	Option Number
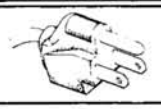	North American 120V/ 15A	120V	ANSI C73.11 NEMA 5-15-P IEC 83	Standard
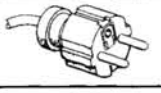	Universal Euro 240V/ 10-16A	240V	CEE (7),II,IV,VII IEC 83	A1
	UK 240V/ 13A	240V	BS 1363 IEC 83	A2
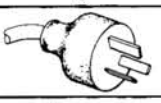	Australian 240V/ 10A	240V	AS C112	A3
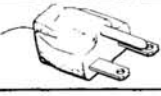	North American 240V/ 15A	240V	ANSI C73.20 NEMA 6-15-P IEC 83	A4
	Switzerland 220V/ 6A	220V	SEV	A5

Abbreviations:
ANSI — American National Standards Institute
AS — Standards Association of Australia
BS — British Standards Institution
CEE — International Commission on Rules for the Approval of Electrical Equipment
IEC — International Electrotechnical Commission
NEMA — National Electrical Manufacturer's Association
SEV — Schweizevischer Elektrotechischer Verein

(2931-21)6555-20

Figure 2-1. Optional power cords.

WARNING

For electrical-shock protection, insert the power plug into a power-source outlet that has a properly grounded protective-ground contact.

The detachable three-wire power cord has a three-contact plug for connection to the power source and the protective ground. The power cord is held to the rear panel by a clamp. The protective ground contact on the plug connects (through the power cord protective-ground conductor) to the accessible metal parts of the instrument.

LINE FUSE

CAUTION

This instrument can be damaged if the wrong line fuse is installed.

Verify the proper value of the power-input fuse with the following procedure:

1. Disconnect the power cord from the power-input source.
2. Press in the fuse-holder cap and release it with a slight counterclockwise rotation.
3. Pull the cap (with the attached fuse inside) out of the fuse holder.

http://www.cbaman.com

4. Verify proper fuse value.

5. Install the proper fuse and reinstall the fuse-holder cap.

INSTRUMENT COOLING

To prevent instrument damage from overheated components, make sure the internal airflow is not blocked. Before turning on the power, check that the ventilation holes on the bottom and side of the cabinet are not covered. After turning the instrument on, check that air is being exhausted from the right-side ventilation holes.

START-UP

When the power is turned on, the instrument does a self-diagnostic check. If the instrument does not turn on and operate normally, turn power off and then on again. If the instrument still does not turn on properly, the TRIGGER MODE LEDs may be flashing to indicate the circuit location of a start-up error. Refer to Troubleshooting in the Maintenance section of this manual for an explanation of the start-up error codes.

When the 2245A is turned on, a self-cal routine may run to set the voltage- and timing-measurement constants. The power-on self cal runs only if the stored constants have been lost, possibly due to a dead memory back-up battery. The following warning message will be displayed for 5 seconds: "WARNING PROBABLE BATTERY FAILURE TURN OFF AND ON TO VERIFY." The instrument can still be used for accurate measurements by running the SELF CAL MEASUREMENTS routine from the SERVICE MENU after the instrument has warmed up for at least 20 minutes.

To run the SELF CAL MEASUREMENTS routine:

Press the left and right VERTICAL MODE buttons (CH 1 and CHOP/ALT). When the SERVICE MENU appears on the screen, press the ADD button (down-arrow) to underline SELF CAL MEASUREMENTS and then press the CH 2 button (RUN) to start the routine. Press the CH 4 button (QUIT) or the CLEAR MEAS'MT button to return to the normal oscilloscope mode.

DETAILED OPERATING INFORMATION

For operating information about specific instrument functions, refer to the 2245A Operators Manual.

http://www.ebaman.com

THEORY OF OPERATION

SECTION ORGANIZATION

This section contains general and detailed descriptions of the 2245A Oscilloscope circuitry. The Block Diagram Description describes the general operation of the instrument functional circuits. Each major circuit is explained in detail in the Detailed Circuit Description. Schematic and block diagrams show the circuit components and interconnections between parts of the circuitry. The circuit descriptions are arranged in the same order as the schematic diagrams.

The detailed block diagrams and the schematic diagrams are in the Diagrams section at the rear of this manual. Smaller functional diagrams are in this section near the associated text. The schematic diagram associated with each circuit description is identified in the text. For best understanding of the circuit being described, refer to the applicable schematic and functional block diagrams.

INTEGRATED CIRCUIT DESCRIPTIONS

Digital Logic Conventions

Digital logic circuits perform many functions within the instrument. Functions and operation of the logic circuits are represented by logic symbology and terminology. Most logic functions are described using the positive-logic convention. Positive logic is a system where the more positive of two levels is the TRUE (or 1) state; the more negative level is the FALSE (or 0) state. In this logic description, the TRUE state is high, and the FALSE state is low. Voltages of a high or low state vary among individual devices. For specific device characteristics of common parts, refer to the manufacturer's data book.

Hybrids

The Channel 1 and Channel 2 attenuators and input buffers are hybrid devices combining thick-film and semiconductor technologies. These devices are made with interconnected circuitry on a single ceramic carrier and have improved performance characteristics over a more discrete type circuit.

http://www.ebaman.com

Linear Devices

The operation of individual linear integrated circuit devices is described in this section using waveforms or graphic techniques when needed to illustrate their circuit action.

BLOCK DIAGRAM DESCRIPTION

INTRODUCTION

The Block Diagram Description gives an overview of the schematic circuit functions as illustrated in Figure 3-1. It is provided as an aid in understanding the overall operation of the 2245A Oscilloscope circuitry before individual circuits are discussed in detail. The Simplified Block Diagram illustration shows the basic interconnections for signal flow and control signals. Schematic diagram numbers that are referred to in the text are shown by a diamond symbol in each block of the figure.

VERTICAL INPUTS (Diagram 1)

The signals for viewing or for triggering are applied to the CH 1 through CH 4 vertical input BNC connectors via coaxial cables or probes. Channels 1 and 2 have a choice of AC or DC input coupling or GND. Channels 3 and 4 have DC input coupling only. Scaling of the Channel 1 and Channel 2 input signals has a range of 2 mV per division to 5 V per division without the use of external attenuators. Channels 3 and 4 are limited to two input attenuator choices: 0.1 V per div and 0.5 V per div.

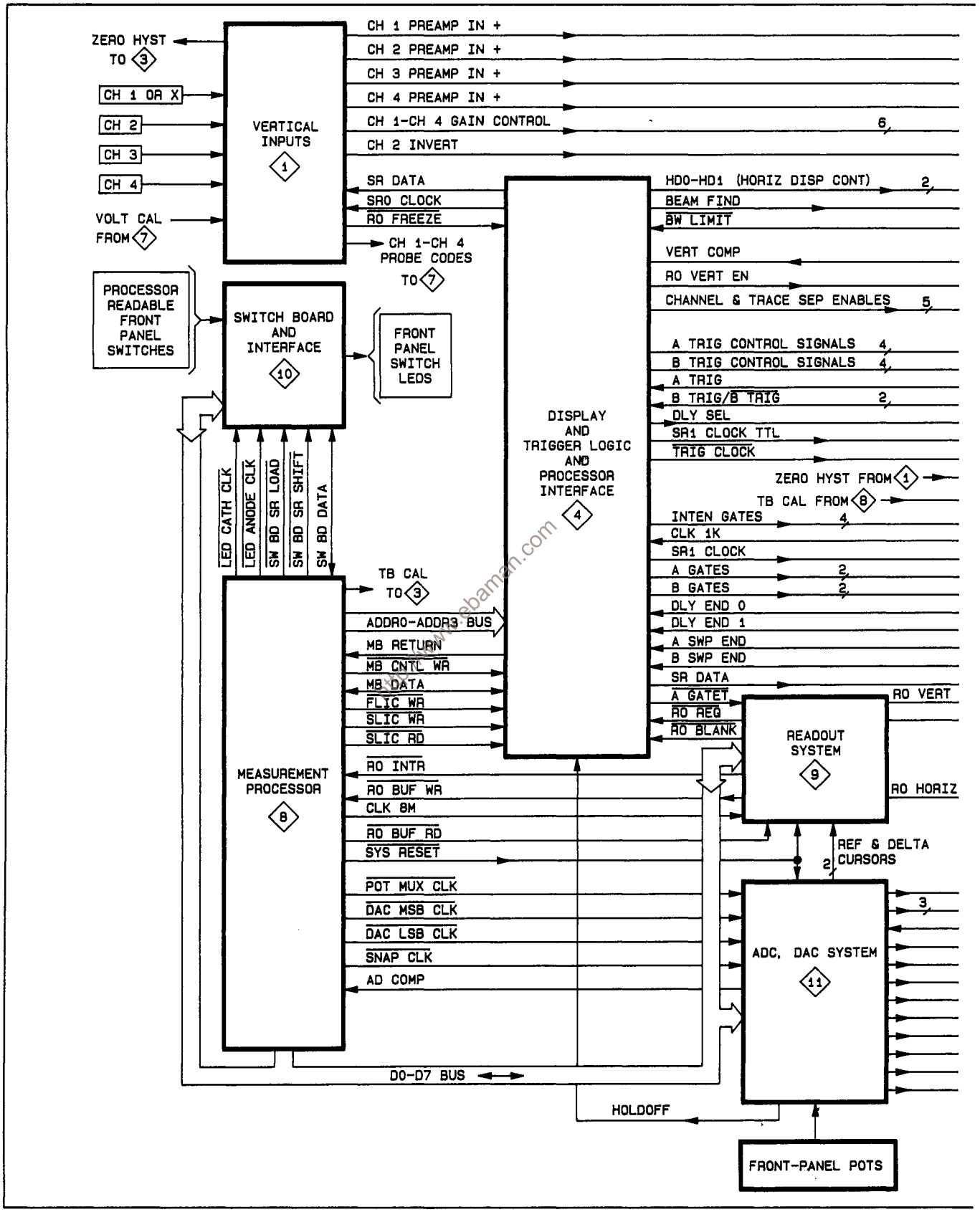

Figure 3-1. Simplified block diagram.

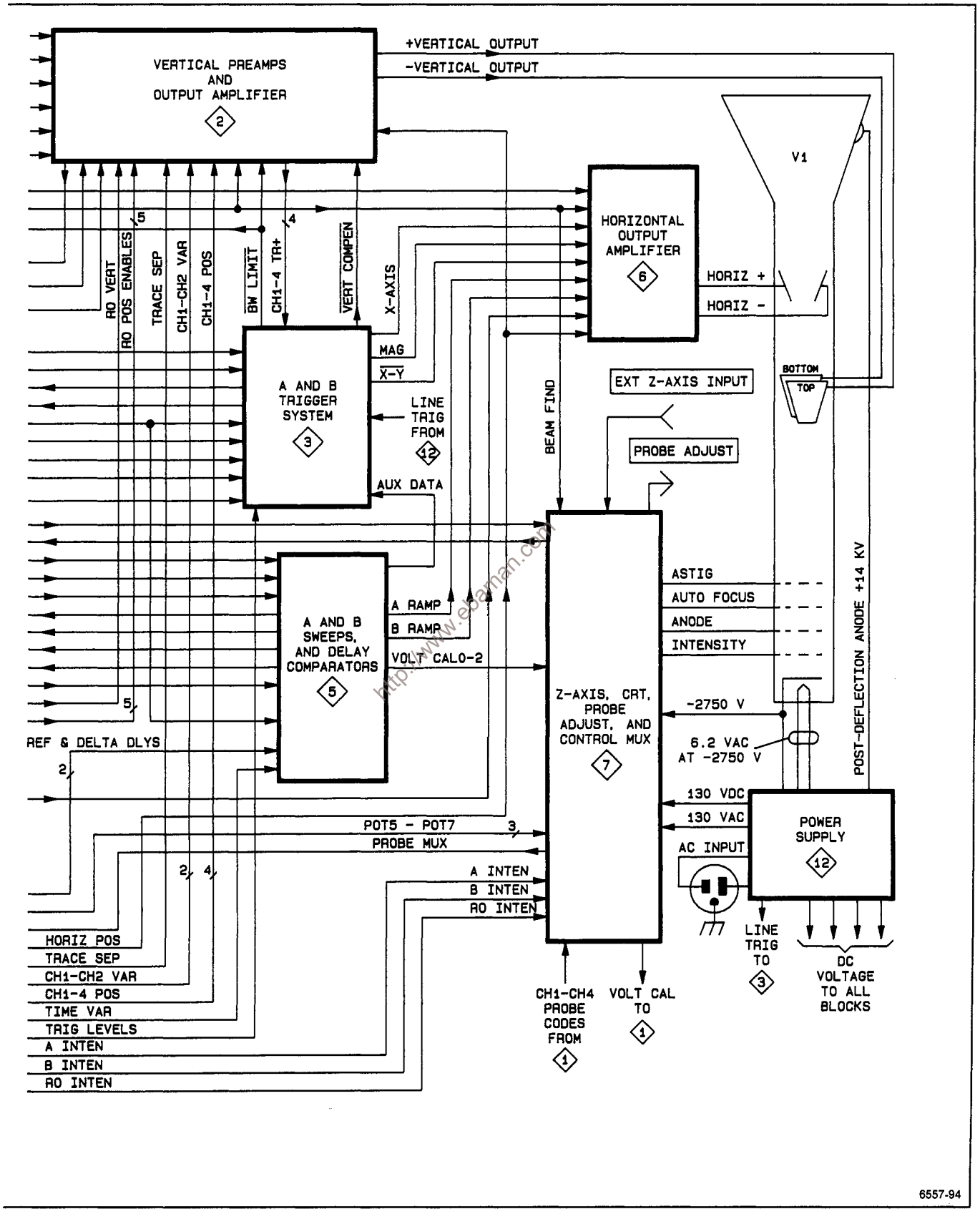

Figure 3-1. Simplified block diagram (cont).

Scaling of the Channel 1 and Channel 2 signals is done by a series of switchable attenuators that provide either no attenuation, X10 attenuation, or X100 attenuation of the input signal. A low-impedance attenuator following an input signal buffer produces X1, X2, and X5 attenuation steps. Additional control of input signal scaling is provided by the selectable gain Vertical Preamplifiers (shown in Diagram 2).

Channel 3 and Channel 4 input signals are buffered by high input impedance FET amplifiers; no input attenuation of the signal is provided. The gain choices for Channel 3 and Channel 4 are selected by the choice of Vertical Preamplifier gain setting only.

The Measurement Processor controls the operation of much of the switchable circuitry of the 2245A via a common shift register data line (SR DATA). Data bits loaded into the attenuator control and gain shift register (designated SR0) set the magnetic relay switches for the input coupling and attenuator settings and select the gain settings of the Preamplifiers.

VERTICAL PREAMPS AND OUTPUT AMPLIFIER (Diagram 2)

Each vertical channel has identical selectable-gain Preamplifiers. The calibrated gain for each is manually set during adjustment. Enabling of the Preamplifiers to display a channel input signal is controlled by the Display Sequencer (U600, Diagram 4). Preamplifier gain settings are controlled by the Measurement Processor via control bits loaded into the attenuator control and gain shift register (Diagram 1). Vertical channel trigger signal outputs are produced by each of the Preamplifiers for triggering the sweep from the applied signal.

The vertical outputs of each preamplifier are connected to a summing node at the input to the Delay-Line Driver. There, the signal current (from the enabled Preamplifiers) and the no-signal standing currents (from the disabled Preamplifiers) are added with the current from the position signal switching circuit.

The signal current for the enabled channel (vertical channel signal plus its position offset) or the readout position current (enabled to the summing node during text and cursor displays) is applied to the Delay-Line Driver. There, it is buffered and compensated to drive the vertical delay line. The delay line produces enough delay in the signal to permit the trigger circuitry to start the sweep before the vertical signal arrives at the crt deflection plates, and the rising edge of the triggering signal may be viewed.

From the output of the delay line, the signals are applied to the Vertical Output integrated circuit. The Vertical Output IC (U701) has provisions for vertical BEAM FIND, bandwidth limiting, and vertical centering of the readout displays. External filter elements on the Vertical Output IC produce the bandwidth limiting when switched into the amplifier circuitry. The output signal from U701 is then applied to the Vertical Output Amplifier where it gets its final boost in power to drive the vertical crt deflection plates.

An auxiliary Vertical Comparator circuit (U702 and Q703) is shown in Diagram 2. Its purpose is to measure the gains and offsets during SELF CAL to determine the vertical calibration constants needed for the measurements and tracking cursor displays.

http://www.ebaman.com

A AND B TRIGGER SYSTEM (Diagram 3)

The A and B Trigger System provides the circuitry for trigger source, slope, coupling, and bandwidth selection; trigger level comparison; tv trigger detection; and dc measurements of the measurement source signal.

Trigger selection signals from the Display Sequencer (U600, Diagram 4) drive the switching circuitry internal to U421 and U431. The signals select the correct trigger source, slope, and coupling choice for the present front-panel control setting. For VERT MODE triggering with more than one vertical channel displayed, the trigger source selection changes as each channel is displayed. When the ADD Vertical Mode is selected, a special amplifier arrangement in U421 (for A) or U431 (for B) sums the CH 1 and CH 2 signals to provide an ADD trigger signal for display of the ADD waveform.

The Trigger CPLG (coupling) selections are AC, DC, HF REJ (high-frequency reject), LF REJ (low-frequency reject), and NOISE REJ. Of these, all but NOISE REJ coupling are produced by selecting a filter path with the necessary bandwidth characteristics. NOISE REJ coupling is done in the Trigger Level Comparator circuit by decreasing the sensitivity of the comparator.

When the trigger signal level crosses the comparator threshold set by the Trigger LEVEL and SLOPE control settings, the comparator output changes states. That state change is applied to the Trigger Logic IC (U602, Diagram 4). The Trigger Logic circuitry then produces the gating that starts the A or B Sweep as appropriate.

Separate A and B Trigger bandwidth limit circuits before the Trigger Level Comparators allow the flexibility that is needed for using the B Trigger circuitry as the measurement signal channel. Even when the B Trigger signal itself is bandwidth limited, full bandwidth is used for making measurements. Signals are measured by using the B Trigger Level Comparator as a successive-approximation analog-to-digital converter to determine the peaks or dc level of the applied signal. When making a measurement, the B Trigger Level signal is driven in a binary search by the Measurement Processor (via the DAC system, Diagram 9) while the output of the B Trigger Level Comparator is monitored. When the smallest resolution output of the DAC system causes the comparator output to change states, the Measurement Processor stops the search and uses the DAC input value at that point as the measured value of the applied signal.

Video signal processing to obtain either Field or Line triggering is done in the TV Trigger Detector. Peak detectors determine the negative or positive peaks of the applied video signal. Those levels set the voltage at the reference input of the video signal comparator at a level that strips off all the video information (when the slope selection is correct for the polarity of the applied signal). The remaining composite sync signal is applied directly to the trigger system for Line triggering. Field triggering is obtained by filtering the composite sync to obtain only the vertical sync pulse.

The operating modes of the Trigger circuitry are controlled by the Measurement Processor. Auxiliary Data Shift Register U1103 (the last device in shift register 1) is serially loaded with control bits from the SR DATA line by the SR1 TTL clock. The state (high or low) of the control bits select the bandwidth setting of the A and B Triggers, TV LINE or TV FIELD triggering for the A Trigger system, and the TV FIELD signal for the B Trigger system. Additional control bits output from the Auxiliary Data Shift Register are the MAG signal (X10 Magnification on or off), $\overline{\text{X-Y}}$ signal (X-Y or Y-T displays), and the $\overline{\text{VERT COMP ENABLE}}$ signal (when vertical SELF CAL is done).

DISPLAY AND TRIGGER LOGIC AND PROCESSOR INTERFACE (Diagram 4)

Control of the display states and the trigger system is done by two special devices. The Display Sequencer (U600, also know as SLIC or slow-logic IC) controls activities that enable the vertical channels for display and select the A and B Trigger System operating states. The Trigger Logic IC (U602, also known as FLIC or fast-logic IC) monitors the A and B Trigger signals, the A and B SWP END signals, the DLY END 0 and DLY END 1 signals, and controlling signals from the Display Logic IC. It outputs the A and B GATE and the Z-Axis signals that start the sweeps and unblank the crt at the appropriate times.

Setup data to the internal registers of the two logic devices is sent from the Measurement Processor over the MB DATA line. A register is enabled for loading by the address that is latched on the ADDR0-ADDR3 lines (from Diagram 8). Data bits are written to U600 with the $\overline{\text{SLIC WR}}$ strobe, and to U602 with the $\overline{\text{FLIC WR}}$ strobe. The contents of the internal registers of the Display Logic IC may also be read by the Measurement Processor using the $\overline{\text{SLIC RD}}$ strobe.

The Processor Interface portion of Diagram 4 handles the serial communications between the serial shift registers and the Measurement Processor. This circuitry is the Measurement Processor's means of controlling the circuit hardware setups in response to a front-panel control setting. Data controlling the state of the serial data bit to be loaded into the shift registers is placed on the ADDR0-ADDR2 bus lines. That address is decoded to produce either a high or a low that is latched on the SR DATA signal line. The appropriate shift register clock is then generated to load the latched bit. Each bit is loaded in succession until all the control bits of a shift register are loaded.

The purpose of shift register (U502) is to permit the Measurement Processor to read back the outputs of the shift registers for diagnostic purposes and the output of the Vertical Comparator during vertical SELF CAL. The last bit from shift register 0 and shift register 1 ($\overline{\text{RO FREEZE}}$ and $\overline{\text{BW LIMIT}}$ respectively) and the Vertical Comparator (VERT COMP) state are loaded in parallel and serially shifted out onto the MB RETURN line to be read by the Measurement Processor.

http://www.tekmanuals.com

A AND B SWEEPS AND DELAY COMPARATORS (Diagram 5)

The A and B Sweep circuitry sets the timing and produces the A and B ramp signals to drive the crt horizontal deflection plates. The Measurement Processor sets the hardware states using control bits loaded into shift register 1. One register (U302) holds the bits for selecting the A Sweep timing resistors and capacitors, and one register (U303) holds the B Sweep control bits. The timing resistors are selected by multiplexers (U307 and U308 for A Sweep timing; U310 and U311 for B Sweep timing) that are switched by the states of the control bits; timing capacitors are selected directly by the control bits.

The starting level of the sweeps is held steady by a Baseline Stabilizing circuit, and the sweep ends are determined by two Sweep-End Comparators. A and B GATE signals from the Trigger Logic IC (U602, Diagram 4) control the start of the sweep ramps. A constant charging current to the timing capacitors produces a linear voltage rise across the capacitors. That voltage is buffered by the A and B Sweep Buffers for application to the Horizontal Output Amplifier (Diagram 6).

The SEC/DIV VAR control, when out of the calibrated detent position, changes the charging current delivered to the sweep timing capacitors proportional to its rotation. Decreasing the current lengthens the ramp to decrease the sweep speed.

Two comparator circuits are used to check the A Sweep ramp amplitude against the Reference Delay and Delta Delay voltages. Both Delay End Comparator outputs are applied to the Trigger Logic IC (U602, Diagram 4). The Trigger Logic IC monitors the delays to determine when the B Sweep may either run (for RUNS AFTER B Trigger Mode) or accept a B Trigger (for any of the triggered B Sweep modes).

HORIZONTAL OUTPUT AMPLIFIER (Diagram 6)

Deflection signals applied to the Horizontal Preamplifier (U802) are the A Sweep Ramp, the B Sweep Ramp, the horizontal readout, and the X-Axis input signal for X-Y displays. Mode control signals HD0 and HD1 (from Display Logic IC U600 to the Horizontal Preamplifier) select the horizontal display mode (A Sweep only, B Sweep only, Alternate, or X-Y display). Other control signals to the Horizontal Preamplifier are the MAG signal (for X10 magnification of the sweep), the BEAM FIND signal (decreases horizontal gain), and the horizontal position signal for positioning the display. The X-Y signal controlling U301B reduces the range of the Horizontal POSITION signal delivered to the Horizontal Preamplifier when in the X-Y display mode.

Five manual adjustments are associated with the Horizontal Preamplifier. They are the X10 and X1 gain, the Readout gain, the X-Axis signal gain, and Mag Registration. Mag Registration compensates for offset between X10 and X1 gains, but it is primarily used to center the readout displays horizontally.

The active single-ended deflection signal input to the Horizontal Preamplifier is amplified and converted to a differential output signal. That signal is further amplified and compensated by the Horizontal Output Amplifier to drive the horizontal deflection plates of the crt. The final output amplifier consists of four MOSFET transistors (Q801, Q802, Q805, and Q806). Two transistors are used for each deflection plate (left and right) to divide the power-handling requirements.

Z-AXIS, CRT, PROBE ADJUST, AND CONTROL MUX (Diagram 7)

This block of circuitry is divided into several different functions. The largest division is the Z-Axis and CRT circuitry. A INTEN, B INTEN, and RO INTEN input signals from the Analog Control Auto Setup (Diagram 11) and the front-panel controls are applied to the Z-Axis circuit to set the associated display intensities. Enabling gates from the Display Controller (Diagram 4) select the appropriate Z-Axis input signal for application to the Z-Axis amplifier as the different display types are enabled. The amplified Z-Axis signals are then level shifted to the negative voltage of the crt cathode (-2.7 kV) in a dc restorer circuit. A similar dc restorer circuit provides auto focusing (at the fixed focus level set by the front-panel FOCUS control) in response to the intensity level changes. The intensity and auto focus control voltages are applied to the crt where they modulate the electron beam flow that produces the display seen on the screen.

Multiplexer U506, under control of the Measurement Processor, scans the front-panel intensity potentiometers and the probe code lines to check for a change. Signal selection for routing through the multiplexer is controlled by the three bits on the POT5-POT7 bus lines from the Pot Data Latch (Diagram 11). Output from the multiplexer is routed to the Front-Panel Multiplexer (U2309, Diagram 11) and multiplexed with other front-panel control levels. Outputs from U2309 are routed to the A-to-D Converter (U2306, Diagram 11) where a digital value

http://www.eBaman.com

representing their analog voltage level is determined. That value is checked against the previously obtained value for a selected potentiometer or probe code to determine if a change has occurred and, if so, the amount and direction of the change. The Measurement Processor uses that information to generate new control voltages to the circuitry affected by the change.

The Probe Adjust circuit (U930 and associated circuitry) produces a square-wave signal which is output to the front-panel PROBE ADJUST jack for compensating voltage probes and checking the vertical deflection system of the oscilloscope.

The Volts Cal circuit (U931 and an associated precision voltage divider) provides the accurate dc voltage levels used during vertical SELF CAL to check the gain and offset of the measurement channels.

The Scale Illumination circuit is made up of three incandescent graticule lamps and current-source transistors. The SCALE ILLUM potentiometer sets the bias level on (and thereby the current through) the transistors.

MEASUREMENT PROCESSOR (Diagram 8)

Many of the oscilloscope circuitry functions are directed by the Measurement Processor (U2501). The Measurement Processor, under firmware control, monitors the front-panel controls and sets up the circuitry under its control according to the settings made and the instructions contained in the System ROM.

The Measurement Processor communicates directly with the devices on its eight-bit data bus. The Measurement Processor selects the device to transfer data to or from by placing the address of the device on the Measurement Processor Address Bus. That address is decoded to produce a strobe that enables the bus device corresponding to the address. Writing to or reading from the enabled device is controlled by write or read ($\overline{WR}$ and $\overline{RD}$) pulses from the Measurement Processor. Communication on the data bus is usually limited to high-speed data transfer only (to and from the System RAM and from the System ROM) and not direct control of any circuit functions.

For controlling most of the circuit operating states, the Measurement Processor places serial bits on the bidirectional MB DATA line. Appropriate enabling strobes and clocks are generated either in its address-decoding circuitry or by the Processor Interface circuitry (Diagram 4) to load the control data into 24-bit or 32-bit shift registers. The outputs of these registers control such things as attenuator settings, preamplifier gains, sweep timing, and trigger operating modes; all circuit operating functions that either change with front-panel settings only or at a slow rate.

Scanning of the front-panel controls and lighting of the front-panel LEDs that back-light the buttons is under control of the Measurement Processor. These events occur at long intervals compared to the operating speed of the Measurement Processor. The front-panel switch closures are read by the Measurement Processor over a serial communication line (SW BD DATA).

READOUT SYSTEM (Diagram 9)

Readout System

The Readout Processor (U2400) controls the display of text and cursor readouts as directed by the Measurement Processor. The ASCII code of each character (blanks included) in a full screen of readout (one field) is loaded into the appropriate memory location of the Character Code RAM (U2406) by the Measurement Processor. It is then up to the Readout Processor to control the display process.

When the Readout Processor addresses the Character Code RAM for display of the loaded characters, the address of a memory location dictates the place that the addressed character will appear on the face of the crt. The ASCII code found at the addressed location in the Character Code RAM then accesses the character to be displayed from the Character Dot Position ROM (U2408). The screen position of an individual dot within an addressed character is directed by the character data obtained from the Character Dot Position ROM.

The data bits specifying the character position on screen and the dot position within a given character are converted to analog vertical and horizontal position signals by the readout DACs (U2412 for vertical and U2413 for horizontal). For cursors and cursor-related text, voltages representing the cursor positions are added in the output mixer circuitry (U2414, U2415, and U2416) to place the readout correctly on screen. Vertical position information needed for the measurement-tracking cursors and readouts is added in the Vertical Position Switching circuit (Diagram 2).

http://www.ebamanuals.com

The dots are continually refreshed to maintain a flicker-free readout. When the readout data needs changing, the Measurement Processor halts the refreshing and loads the new screen of data into the Character Codes RAM.

SWITCH BOARD AND INTERFACE (Diagram 10)

Most of the front-panel switches that can be read by the Measurement Processor are "soft" switches; they are not connected directly into the circuit to be controlled. The front-panel control physical parameters of capacitance, leakage resistance, and inductance, therefore, cannot affect the operation of the controlled circuit. The wiper voltage of the potentiometers is digitized, and that digitized data is used by the Measurement Processor to set up the circuitry under its control as dictated by the control change.

The momentary push-button switches are rapidly scanned at short intervals by the Measurement Processor to check if one is being pressed. When a switch closure is detected, the Measurement Processor makes the necessary circuit or display changes as directed by its firmware instructions for that button and the existing operating states.

Functions are shown to be on by turning on the LED (light-emitting diode) that back-lights the push button or panel label. The Measurement Processor controls the lighting via control registers (U2523 and U2524) that it reloads with control data to enable the correct LED with each button or mode change.

ADC AND DAC SYSTEM (Diagram 11)

The ADC and DAC system is the Measurement Processor's control link to the analog circuitry. When the Measurement Processor does a scan to determine the front-panel control settings, the DAC system drives the input to the A-to-D converter comparator (U2306) in a binary search pattern to determine the voltage level applied to the other input of the comparator. The smallest incremental change in the DAC input data that produces a switch in the comparator's output identifies the digital value of the unknown voltage. The output of the comparator (AD COMP) is applied to the Data Buffer U2515 on Diagram 8.

POWER SUPPLY (Diagram 12)

The low and high voltages required to power the 2245A are produced by a high-efficiency, switching power supply. Input ac voltage from 90 to 250 volts and from 48 to 445 Hz is converted to a dc voltage that powers a preregulator circuit. The preregulator supplies regulated power to an inverter switching circuit in the primary of the power transformer (T2204). The secondary voltages produced at the secondary windings of the transformer are rectified and filtered to provide the low voltage power requirements of the instrument.

High voltage to drive the crt is generated by a multiplier circuit (U2203) that provides the +14 kV post-deflection anode voltage and the -2.7 kV to the cathode. The 6.2 Vac heater voltage is supplied by a isolated secondary winding from the power transformer that is referenced to the -2.7 kV cathode voltage.

http://www.eoaman.com

DETAILED CIRCUIT DESCRIPTION

VERTICAL INPUTS (Diagram 1)

Channel 1 and Channel 2 input circuits on this schematic diagram are arranged identically. Only Channel 1 circuit numbers are referred to in the discussion. CH 3 and CH 4 are also arranged identically to each other and described separately from CH 1 and CH 2.

Input Coupling

Signals applied to the CH 1 BNC connector are coupled to the CH 1 attenuator via the CH 1 Input Coupling circuit. Relay K100 switches between direct (DC) and capacitive coupling (AC) of the input signal; K101 switches between connecting the applied input signal and the VOLT CAL signal to the input of the attenuator. The VOLT CAL signal line provides either the ground for GND Coupling in normal

oscilloscope operation or a test voltage input for characterization during vertical SELF CAL. With the Input Coupling set to GND (both AC and DC off), the signal path is bypassed by C113. That capacitor filters any noise from the VOLT CAL signal line. There is no precharge of the input coupling capacitor (C112) when the coupling is in ground (GND). Resistor (R111), in series with the BNC input, is a damping resistor.

The probe coding signal (CH1 PRB) is applied to a multiplexer (U500, Diagram 7) where it is selected to be digitized in turn with the other probe-code signals and the front-panel potentiometers. The Measurement Processor determines, from the digitized value of the voltage, the attenuation factor of any attached coded probe (Tektronix coded probes). The scale factor of the VOLTS/DIV readout is then switched to reflect the correct scaling of the displayed signal. Uncoded probes and coaxial cables are interpreted as having no attenuation for setting the readout scale factors.

High-Impedance Attenuator

Switching relays K102 and K103 control the signal path through the high-impedance attenuator, AT117. Signal attenuation is done by two 10X attenuator sections; for 100X attenuation, the two sections are cascaded. The 1 MΩ termination resistance at the output of the attenuator is divided into two parts: 750 kΩ and 250 kΩ. An output taken across the total resistance is applied to the buffer amplifier fast-path input; another output taken across the 250 kΩ section is applied to the slow-path input. Low-frequency compensation for the hybrid attenuators is adjusted by C10 and C11 (parts of the hybrid circuit on the ceramic carrier); input C is adjusted using C114.

Input Buffer Amplifier and 1X, 2X, 5X Attenuators

Input Buffer Amplifier U112 (for CH 1) is a hybrid device. The amplifier portion of the circuitry is a fast-path/slow-path buffer having unity voltage gain that presents a high-resistance, low-capacitance load to the signal from the high-impedance attenuator and a low output impedance to the low-impedance attenuator at the output of the amplifier. The switchable low-impedance, voltage divider network of U112 provides 1, 2, and 5 times attenuation of the output signal for application to the Vertical Preamplifier.

The input signal is applied to pin 2 (fast-path input) and pin 4 (slow-path input) of U112 from the 1 MΩ divider at the output of the high-impedance attenuator. Internal circuitry of U112 isolates the signal from loading of the low-impedance attenuator and provides the slow-path and fast-path signal amplification. The fast amplifier path quickly passes the fast leading and falling edges of an input signal with the slow path catching up to complete the signal transfer. The output of the buffer sees a 300 Ω input impedance to the low-impedance attenuator, and the preamplifier sees a 75 Ω output impedance at pin 8 of U112 for all VOLTS/DIV switch settings.

Attenuator and Vertical Mode Control Registers

The switching relays of Channel 1 are driven by transistor array U174. Drive to each of the transistors in the array to switch the relay states is supplied by the Measurement Processor (U2501) via U171. That device is a portion of a shift register formed by U171, U172 (for channel 2 relays), and U173 (for Preamplifier gains). The devices are connected in series to form one long shift register (designated Shift Register 0). Serial data bits for the entire register string are loaded at pin 2 of U171 from the SR DATA line by the SR0 CLOCK applied to pin 3 of all three devices. See Table 3-1 for data bit assignments. Tables 3-2, 3-3, 3-4, and 3-5 define the bit states for controlling the switching.

CH 3 and CH 4 Input Amplifiers

The CH 3 and CH 4 input buffer amplifiers are identical discrete FET amplifiers. Input coupling for these two vertical inputs is always DC; there is no coupling switch. The 1 MΩ input is formed by a series voltage divider that attenuates the input signal by five times for application to the gate of the input FETs. The VOLTS/DIV setting (either 0.1 V or 0.5 V) is made in the Preamplifier stage of the channel. Operation of CH 3 is described; like components in CH 4 do the same job.

http://www.ebaman.com

Table 3-1
Shift Register 0 Bit Assignment

Pin	Signal	Controls
	U171	
4	$\overline{\text{CH 1 GND}}$	K101—CH 1 GND Coupling (last bit)
5	CH 1 AC	K100—CH 1 AC Coupling
6	$\overline{\text{CH 1 X10 1}}$	K102—CH 1 X10 Attenuator 1
7	CH 1 X10 2	K103—CH 1 X10 Attenuator 2
14	CH 1 X1	K105—CH 1 X1 Buffer Attenuation
13	NOT USED	No connection
12	CH 1 X5	K104—CH 1 X5 Buffer Attenuation
11	CH 1 PREAMP 1	U210—CH 1 Preamplifier Gain
	U172	
4	CH 1 PREAMP 0	U210—CH 1 Preamplifier Gain
5	$\overline{\text{CH 2 GND}}$	K108—CH 2 GND Coupling
6	CH 2 AC	K107—CH 2 AC Coupling
7	$\overline{\text{CH 2 X10 1}}$	K109—CH 2 X10 Attenuator 1
14	CH 2 X10 2	K110—CH 2 X10 Attenuator 2
13	CH 2 X1	K112—CH 2 X1 Buffer Attenuation
12	NOT USED	No connection
11	CH 2 X5	K111—CH 2 X5 Buffer Attenuation
	U173	
4	CH 2 PREAMP 1	U220—CH 2 Preamplifier Gain
5	CH 2 PREAMP 0	U220—CH 2 Preamplifier Gain
6	CH 2 INVERT	U220—CH 2 Preamplifier Invert
7	CH 3 PREAMP 1	U230—CH 3 Preamplifier Gain
14	CH 4 PREAMP 1	U240—CH 4 Preamplifier Gain
13	ZERO HYST	U431C—B Trigger Comparator Hysteresis
11	$\overline{\text{RO FREEZE}}$	U509C—Controls Readout for SELF CAL (first bit loaded)

http://www.ebaman.com

From the gate of Q131A, diode CR131 provides protection from negative overvoltages exceeding about −8 V. Input C is adjusted by C134 for low-frequency compensation. High-frequency response is compensated by C138 across load resistor R137. Step balance is adjusted by R141 in the source lead of Q131B. The single-ended output of U131A is applied via R139 (a 75 Ω resistor) to the CH 3 Preamplifier. The impedance seen by the other differential input of the Preamplifier (U230, pin 8, Diagram 2) is matched by the parallel combination of R158 and C159 in series with R160.

The probe-coding signal, CH 3 PRB, is read the same way as the CH 1 and CH 2 probe-coding signals. The VOLTS/DIV readout for Channel 3 is switched to correctly match the probe attenuation factor (when properly coded probes are used).

VERTICAL PREAMPS AND OUTPUT AMPLIFIER (Diagram 2)

Vertical Preamplifiers

Each input channel has it own Vertical Preamplifier (CH 1–U210, CH 2–U220, CH 3–U230, CH 4–U240). The gain setting of the Preamplifier is controlled by Measurement Processor U2501 via the assigned control bits from Shift Register 0 (see Table 3–2). Channel 1 and Channel 2 gains require two control bits (on pins 1 and 2 of the Preamplifiers) to set three different gains for 2 mV, 5 mV, and 10 mV VOLTS/DIV scaling. From 10 mV per division and up, the gain of the CH 1 and CH 2 Vertical Preamplifiers is set to 10 mV per division. The 1, 2, 5 scaling sequence for the remaining VOLTS/DIV switch settings is obtained by switching the high- and low-impedance attenuators. Gain of the CH 3 and CH 4 preamplifiers is controlled by one bit each (on pin 2), since there are only two scaling settings (0.1 V and 0.5 V per division) to select (see Table 3–5 for the gain-control bit states).

The internal circuitry of each Vertical Preamplifier is matched for the 2 mV, 5 mV, and 10 mV gain settings and the dc offsets. The output gain of each Preamplifier is adjusted by varying the common-mode resistance across the output pins (pin 13 to pin 14) to produce calibrated gain for each of the vertical channels.

Each Vertical Preamplifier has a trigger pickoff (pins 17, 18, 19, and 20) for supplying the internal trigger signal to the A and B Trigger Source Selector Multiplexers. Capacitor coupling from pins 17 and 18 to pins 19 and 20 provides a fast-path signal into a duplicate, but level-shifted, slow-path signal line. The negative side of the differential trigger signal is terminated in a capacitor to ground (from pin 19) to provide a balance for the transmission line.

Table 3–2

Input Coupling Control Bit States

Coupling	GND	AC
GND/CAL	0	1
AC	1	1
DC	1	0

http://www.ebaman.com

Table 3–3

CH 1 and CH 2 Attenuator and Gain Control Bit States

VOLTS/DIV	$\overline{\text{X10 1}}$	$\overline{\text{X10 2}}$	X1	NC	X5	PREAMP1	PREAMP0
2 mV	1	0	1	0	0	0	0
5 mV	1	0	1	0	0	0	1
10 mV	1	0	1	0	0	1	1
20 mV	1	0	0	1	0	1	1
50 mV	1	0	0	0	1	1	1
100 mV	1	1	1	0	0	1	1
200 mV	1	1	0	1	0	1	1
500 mV	1	1	0	0	1	1	1
1 V	0	1	1	0	0	1	1
2 V	0	1	0	1	0	1	1
5 V	0	1	0	0	1	1	1

Table 3-4
CH 2 INVERT Control Bit

Setting	CH 2 INV
Normal	0
INVERT	1

Table 3-5
CH 3 and CH 4 Gain Control Bit

VOLTS/DIV	PREAMP1
0.1 V	0
0.5 V	1

The VOLTS/DIV VAR controls for CH 1 and CH 2 (R2101 and R2103) directly vary the gain of the Vertical Preamplifiers between the calibrated VOLTS/DIV settings. The Measurement Processor detects whether the VAR control for a channel is in or out of its detent position; and, if out, a greater-than symbol (>) is placed in front of the VOLTS/DIV readout to show that the channel is uncalibrated.

Each Preamplifier produces a standing current of about 11 mA into a common summing node. Output of the vertical signal from a Preamplifier is controlled by enabling signals (CH 1 EN through CH 4 EN) from Display Logic IC U600 (shown on Diagram 4). The enabling signal that turns on a vertical channel signal also enables the position signal current for that channel through the Vertical Position Switching circuit (either U202 or U201) into the summing node.

Delay Line Driver

The Delay Line Driver is a differential amplifier that provides the signal amplification needed to drive the delay line. The circuit is compensated to produce the needed circuit response at the output of the delay line. Both sides of the differential amplifier are identical, and circuit operation of the positive side components is described.

Transistors Q250 and Q252 are arranged as a feedback amplifier. The parallel combination of R250F and R250G supplies the feedback from the emitter of Q252 back to the base of Q250. Diode CR260 provides a one-diode voltage drop in the feedback loop for proper biasing of the base-to-collector junction of the input transistor (Q250). Gain of the amplifier is set by the value of common-mode resistor R270 (there is a small dc voltage gain). If the Vertical Preamplifier and Vertical Position circuit output currents are exactly 11 mA (no signal and no offsets) the feedback current is zero. Some standing feedback current will be present if the sum of the input currents is not exactly 55 mA. A 1 mA current change of the input base current to Q250 produces a 41 mV change at the collector of Q252. The no-signal dc output voltage from Q252 is +7.5 V, and the standing current is about 15 mA. The differential voltage between the positive and negative side of the delay line with no signal input is 0 V ±0.5 V. The differential signal voltage input to the delay line is about 29 mV per graticule division of deflection.

Biasing of the input transistor bases is supplied by R262 and R264 (for Q250) and R263 and R265 (for Q251). Two resistors in series are used to provide the power handling needed (they are low-wattage precision resistors). The dc voltage at the bases of Q250 and Q251 is maintained at 7.5 V by a bias stabilization circuit. Operational amplifier U260 compares the common-mode voltage at the junction of R254 and R255 to the +7.5 V supply on its pin 3 input. If the base voltage is too low, U260 raises the common-mode emitter voltage (and thereby the base voltage) of the two input transistors.

Compensation components peak up the circuit response to counteract the roll-off effects of the delay line. The three series-rc combinations (C272 and R272, C273 and R273, and C274 and R247) between the emitters of Q252 and Q253 compensate different frequency ranges to correctly shape the circuit response. The series-rc circuit between the collectors of Q252 and Q253 (C275 and R275) damps the gain at high frequencies to prevent oscillation. Impedance matching and input termination of the 75 Ω delay line is done by the parallel-series combination of R278, R279, R280, and R281.

Vertical Position Switching

The Vertical Position Switching circuit consists of buffer amplifiers for the four vertical channel position signals (U203A, B, C, and D), two solid state switch arrays (U201 and U202), and a transistor paraphase amplifier circuit (U280, Q284, and Q285).

The vertical positioning voltages from the front-panel POSITION controls are applied to the non-inverting inputs of the four voltage-follower buffer amplifiers (U203A through U203D). The inputs and outputs of the amplifiers are capacitively bypassed to eliminate noise from the position signals. The buffered output signals are applied to switching arrays U201 and U202 for selection at the correct time for positioning the displayed trace and position-related readouts.

http://www.eDaman.com

POSITION VOLTAGE SWITCHES. Selection of the channel or readout position signals to be supplied to the paraphase amplifier summing node is controlled by several sources. The vertical channel enable signals (CH 1 EN through CH 4 EN) from Display Sequencer U600 (Diagram 4) turn on the appropriate channel position signal for the enabled Vertical Preamplifier when displaying waveforms. The nominal position range of the vertical signal is ±12 divisions.

When position-dependent readout (labeled cursors that follow the vertical channel position controls) is displayed, the RO CH 1 POS EN through RO CH 4 POS EN signals from tri-state latch U2403 (shown on Diagram 9) enable the appropriate vertical position signal into the summing node at the input to the paraphase amplifier. The Readout Position Enable signal lines are tri-stated (open) during display of the channel signals so that the Vertical Channel Enable signals have control of the position enable lines. Also, the Readout Position signals cannot override the Vertical Channel Enable signal levels to turn on a Vertical Channel Preamplifier with the series resistors (R212, R222, R232, and R242) in the signal path. The vertical position of the enabled vertical channel is added to the position of the readout so that the cursors appear at the correct vertical position in the display.

When non-position tracking readout is displayed (i.e., menus and scale-factor readouts), the vertical screen position of the readout is conveyed by the RO VERT signal only. The RO VERT signal is enabled into the summing node input of the paraphase amplifier by the RO VERT EN signal for both readout types (position-tracking or fixed). Extra noise bypassing provided by decoupling components R205, R207, and C268 on the RO VERT signal line reduces jitter of the readout display.

During vertical SELF CAL, the RO CH 1 POS EN through RO CH 4 POS EN signals disable the appropriate vertical position signal into the summing node at the input to the paraphase amplifier without turning off a channel Vertical Preamplifier. The gain and offset of the preamplifiers may then be calculated. The computed offsets are then used by the Measurement Processor to correctly place the position-tracking readouts (cursors) on the display relative to the vertical position of the waveform.

The TRACE SEP EN and RO TR SEP EN signals operate the same as described for the channel enable and readout position enable signals. A slight difference between the channel vertical position signals and the TRACE SEP signal is that TRACE SEP is attenuated more. The higher value of R206 on pin 13 of U201 reduces the TRACE SEP range to ±4 divisions as compared to ±12 divisions for the vertical signals.

POSITION PARAPHASE AMPLIFIER. The Position Paraphase amplifier circuitry is formed by a transistor array (U280) driving two discrete transistors (Q284 and Q285). The circuit is configured as two negative-feedback amplifiers that produce a differential output current from the summed single-ended input current. Transistors U280B and U280E are constant-current sources for their associated amplifier pairs in the array. The feedback path for the U280A-U280F amplifier combination is via R286 from the emitter of Q284. The no-signal feedback current through R286 is 1 mA. Feedback for the U280C-U280D combination is via R289 from the emitter of Q285. Feedback current in R289 is 100 μA. Both Q284 and Q285 are high beta transistors requiring little base-drive current. The overall vertical displacement response from the input (at the base of U280F) to the output is 200 μA per division of vertical screen displacement.

The signal applied to the base of U280C is the inverted position signal developed across R290 in the emitter of Q284. The signal is again inverted by U280C to drive the base of Q285 in the opposite direction from the signal at the base of Q284. The standing dc current (no signal input) output current into the delay line input summing node is 11 mA, the same as the output of the vertical preamplifiers. Vertical centering of the menu and readout displays within the graticule area is done using VERTICAL READOUT CENTERING potentiometer R260.

http://www.ebamanuals.com

Vertical Output Amplifier

WARNING

Vertical Output IC U701 runs hot and can burn you if touched. The metal tab on top of the device is NOT ground; it is the -5 V supply to the IC.

Vertical Output IC U701 buffers the signal output of the delay line and provides the circuitry for the BW LIMIT and BEAM FIND functions and for the vertical signal gain adjustment. The inputs to the Vertical Amplifier are terminated in 75 Ω by external resistors R706 and R707. External filter components C707, L701, and L702 produce the bandwidth limiting of the vertical signal when internally switched into the output amplifier circuitry of U701.

Manual calibration of the vertical signal display to the crt graticule is done using VO Gain potentiometer R703. The components between pins 12 and 22 of U701 (Q704, R726, R727, and R728) provides gain

correction for the small difference in gain between full bandwidth and bandwidth-limited operation of the Vertical Output IC. Correction for a thermal change between display of the signal and display of the readout is provided by the RO Jitter adjustment (R724).

WARNING

Vertical Output Amplifiers Q701 and Q702 run hot and can burn you if touched.

Vertical Output Amplifiers Q701 and Q702 provide the signal gain necessary to drive the vertical crt deflection plates. The deflection plates have a comparatively large capacitance, and to change the voltage as fast as necessary to deflect the crt beam, the Vertical Output Amplifiers have to handle large current demands. A reduction in circuit capacity is made by reducing the collector capacitance of the output transistors. The cases of Q701 and Q702 are NOT the collectors; they are connected to the transistors' base material; the case tabs mark the collector leads. In the collector circuits, T-coils L703 and L704 boost the vertical bandwidth of the output amplifiers; and R731 and R732 are damping resistors.

Vertical Comparator

The Vertical Comparator circuit (U702, Q703, and associated components) allows the Measurement Processor to determine the gain and offset of the vertical system up to the input to the Vertical Preamplifier. The circuit is enabled only during the vertical self characterization routine. Known dc voltage levels are applied to the attenuator inputs, and U702 compares the voltage from the delay line to the HORIZ POS signal which is being driven in a binary search pattern. The output voltage is found by successively narrowing the search levels until the smallest change possible from the DAC system causes the Vertical Comparator output to change states. Using the measured value to compare against the known input voltage, the Measurement Processor determines a Vertical Calibration constant that must be applied to produce accurate voltage measurements.

A AND B TRIGGER SYSTEM (Diagram 3)

Most of the trigger signal switching and trigger level comparator circuitry is contained on two integrated circuit devices (U421 and U431). Within the devices is the logic circuitry that drives the selectable variables of Trigger SOURCE, Trigger CPLG, and Trigger SLOPE for both the A and the B Triggers. Selection of the trigger variables is done by control bits generated by Display Sequencer U600 (Diagram 4). The remaining portions of the circuitry shown in Diagram 3 include the A and B Trigger bandwidth limiting circuitry, the TV Trigger Detector circuitry, and the Auxiliary Control Register (part of Shift Register 1).

A and B Trigger Source Selectors

Analog switching of the Trigger signal sources is done by the circuitry in U421A (for the A Trigger) and U431A (for the B Trigger). The possible Trigger SOURCE selections are the same for both the A and the B Trigger system. They are CH 1, CH 2, CH 3, CH 4, LINE, and VERT. In ALT Vertical MODE, when VERT is the selected source a trigger is obtained in succession for each displayed channel. A stably triggered display will be obtained for each channel signal without regard to frequency relationships between the applied signals. If ADD Vertical MODE is selected, a special adder circuit in U421A and U431A, adds the CH 1 and CH 2 signals to produce an ADD trigger signal composed of the two inputs. The LINE Trigger signal is a sample of the power-line input voltage. Multiplexer U1106A, in the input path for the LINE trigger signal, selects between the LINE signal (for oscilloscope operation) and the TB CAL signal (used for horizontal self characterization).

When a Voltage Measurement is being done, U431A in the B Trigger circuit acts as the measurement channel selector and selects either the CH 1 or the CH 2 input signal to be measured.

A and B Trigger Coupling Selectors

Coupling selections for DC, AC, HF REJ, and LF REJ are done by U421B for the A Trigger and U431B for the B Trigger. The trigger signal path is through a filter circuit having the proper bandpass characteristics for the selected trigger coupling. NOISE REJ coupling is done differently. The two Trigger LEVEL Comparators (U421C and U431C) have selectable hysteresis. For NOISE REJ Trigger CPLG, the hysteresis is increased so that a larger signal change is required to produce a state change at the output of the comparators. Trigger Coupling control logic is shown in Table 3-6.

http://www.tbman.com

Another signal source selectable in the Trigger Coupling Selectors is the output of the TV Trigger Detector (TV LINE. or TV FIELD). An applied composite video signal is separated so that the horizontal line or vertical field sync pulse can be used to trigger the oscilloscope for television signal display (see TV Trigger Detector description). Selection between LINE or FIELD for the A Trigger source is done by multiplexer U1104A with its output being applied to pin 18 of U421B. Pin 18 of U431B in the B Trigger system has an input of either the TV Line sync signal, for TV triggering of the B Sweep, or the output of the Measurement Signal Low-Pass Filter, when the DC measurement mode is active.

Table 3-6

Trigger Selection Logic

Front Panel Coupling Selection	Latched Bit Values				Description
	SLOPE	TS2	TS1	TS0	
A Sweep Mode (U421) Auto Lvl, Auto, Normal, or Single Seq					
DC	0	0	1	0	DC Coupled
NOISE REJ	1	0	1	0	DC Coupled, Noise Reject
HF REJ	0	1	0	1	HF Reject
LF REJ	0	0	0	1	LF Reject
AC	0	1	0	0	AC Coupled
A Sweep Mode (U421) TV Line, or TV Field					
DC	1	0	0	0	TV Input, Noise Reject
NOISE REJ	1	0	0	0	TV Input, Noise Reject
HF REJ	1	0	0	0	TV Input, Noise Reject
LF REJ	1	0	0	0	TV Input, Noise Reject
AC	1	0	0	0	TV Input, Noise Reject
B Sweep Mode (U431) Auto Lvl, Runs After, or Normal					
DC	0	0	1	0	DC Coupled
NOISE REJ	1	0	1	0	DC Coupled, Noise Reject
HF REJ	0	1	0	1	HF Reject
LF REJ	0	0	1	1	LF Reject
AC	0	1	0	0	AC Coupled
B Sweep Mode (U432) TV Line					
DC	1	0	0	0	TV Input, Noise Reject
NOISE REJ	1	0	0	0	TV Input, Noise Reject
HF REJ	1	0	0	0	TV Input, Noise Reject
LF REJ	1	0	0	0	TV Input, Noise Reject
AC	1	0	0	0	TV Input, Noise Reject

http://www.obaman.com

MEASUREMENT SIGNAL LOW-PASS FILTER. The average dc level of a signal is obtained for measurement by filtering the measurement channel signal to remove all but the dc component of the signal. A active RC filter circuit formed by U1101B, R1154, R1155, C1154, and C1155 does the filtering with U1101B buffering the filtered output voltage to isolate it from loading. The dc level is applied back to the Trigger Coupling switch (U431B, pin 18) for input to the B Trigger Comparator (U431C) where the actual measurement is done (see the B Trigger Comparator description).

A and B Trigger Bandwidth Limit Circuits

The A Trigger Bandwidth Limit circuit components (Q440, U441F, CR432, C432, L432, R432, Q444, and U441E) act to roll off the trigger circuit bandwidth when $\overline{\text{BW LIMIT}}$ is active (low). The B Trigger Bandwidth Limit circuit components do the same job (with some additional compensation components), but can be selected independently of the SCOPE BW front-panel setting (by the Measurement Processor using the BW FULL B signal). That is because the B Trigger Channel is used for the Measurement system, and the circuit bandwidth must be full for making measurements. The actual circuit operation for both is the same, and only the A Trigger Bandwidth limiting action is described.

For full trigger bandwidth, the $\overline{\text{BW LIMIT}}$ signal from Auxiliary Register U1103 is written high by the Measurement Processor. That high is inverted to a low by U441E and U441F and applied to the bases of Q440 and Q444. The low output turns off Q444 and disconnects C444 from ground. The purpose of C444 is to act as part of an LC filter that rolls off the signal. The low applied to the base of Q440 turns that transistor on, pulling the anode of CR432 up and forward biasing it. The trigger signal ac path then bypasses L432 and R432 through CR432 and C432. The dc component of the trigger signal is still via L432 and R432.

When the bandwidth is limited, the $\overline{\text{BW LIMIT}}$ signal is low. That is inverted to a high that turns on Q444 (connecting C444 to ground) and turns off Q440 (reverse biasing CR432). The trigger signal path is now through L432 and R432 with C444 connected to ground to roll off the circuit bandwidth.

A Trigger Comparator

The Trigger signal is compared with the A Trigger LEVEL setting by U421C to determine the signal level and slope of the trigger signal that produces a sweep trigger. The comparator slope is set internally by the switching logic; the Trigger comparison level is set using the front-panel Trigger LEVEL control. A fixed amount of hysteresis in the A Trigger Level Comparator prevents double triggering on signals accompanied by normal noise. NOISE REJ coupling increases the hysteresis by a factor of four to reduce the Comparator's sensitivity to noise if triggering on very noisy signals is required. Once a level state change occurs, a larger change in the opposite direction is required (because of the circuit hysteresis) to reverse the state change. The differential output of U421C is applied to the Trigger Logic IC (U602, Diagram 4) where the gating signals to start the display sweep are generated.

B Trigger Comparator

For B Trigger signal comparison, the B Trigger Level Comparator (U431C) works the same as the A Trigger Level Comparator. The output of the B Trigger Level Comparator is applied to the B Trigger input of U602 (Diagram 4) via delay line DL22. The 18 ns delay produced permits the leading edge of the B trigger signal to be viewed when displaying the B Sweep.

Auxiliary Shift Register

Auxiliary Shift Register U1103 is the last register in Shift Register 1. Control bits loaded into the register from the AUX DATA signal line (from U303 pin 9, Diagram 5) are serially shifted through Sweep Shift Register U302 and U303 (Diagram 5). Circuit functions controlled by the bits in U1103 are the following:

B TV TRIG EN: Switches between the B TV Trigger signal and the DC measurement signal voltage (U1106C).

TV FIELD SEL: Switches the A Trigger between TV FIELD and TV LINE (U1104A).

MAG: Controls the X10 Magnification function of the Horizontal Output Preamplifier (U802, Diagram 6).

$\overline{\text{VERT COMP EN}}$: Turns on the Vertical Comparator (U702, Diagram 2) during voltage self characterization.

TB CAL: Switches the time-base calibration signal into the B trigger system during horizontal self characterization (U1106A).

BW FULL B: Switches between full and limited B Trigger bandwidth.

http://www.tdaman.com

$\overline{\text{BW LIMIT}}$: Switches between full and limited A Trigger bandwidth. The $\overline{\text{BW LIMIT}}$ signal has a second use. As the last bit in Shift Register 1, it is fed back to the Measurement Processor during diagnostic checks done on the Shift Registers.

$\overline{\text{X-Y}}$: Switches the range of the horizontal position signal (HORIZ POS) between that needed for Y-T display and that needed for X-Y display (U301B, Diagram 6).

Multiplexer (U1106A) normally provides the Line Trigger signal picked off from the Power Supply input. For self characterization (SELF CAL) of the Time Base, the switch outputs the TB CAL signal obtained from the Measurement Processor (U2501, Diagram 8).

TV Trigger Detector

INPUT AMPLIFIER. The signal at pin 19 of U421A is applied to pin 3 of U1101A via a low-pass filter formed by R426, L426, and C426. The filter limits the bandwidth of the X-AXIS signal to about 5 MHz for application to the Horizontal Preamplifier (U802, Diagram 6) and to the TV Trigger Detector circuitry. Operational amplifier U1101A provides low-pass gain of the applied composite video signal that further attenuates the video portion of the signal relative to the sync pulses. The output signal from U1101A is applied to the Peak Detectors and the Sync Comparator.

PEAK DETECTORS. The peak detectors determine the positive and negative peaks of the applied composite video signal. Those peaks voltages are applied across a voltage divider circuit used to set the comparison level (slice level) to one input of a comparator. That level is such that, when the user selects the correct sync polarity for the applied signal, the middle of the sync tips is at the threshold level of the comparator. The output of the comparator then switches only on the sync tips of the applied signal. The peak detectors are complementary in that the positive-peak detector transistors (Q1101, Q1102, and Q1103) and the negative-peak detector transistors (Q1104, Q1105, and Q1106) are complementary types (PNP-NPN). Both detectors are driven from the same input signal; the positive peaks of the video signal forward bias Q1101, and the negative peaks forward bias Q1104. The operation of the positive peak detector is described.

The composite video signal is applied to the emitter of Q1101. A positive-going signal increases the current through Q1101, causing the collector voltage to rise. The rising collector voltage biases on Q1102 harder, and C1114 charges up rapidly following the positive-going signal up to its positive peak. When the input signal starts negative, Q1101 is turned off immediately by the charge held on C1114. That leaves C1114 holding the positive peak voltage of the input signal. Emitter-follower Q1103 applies that peak voltage level to U1104B pin 3 via R1117. R1136 to the -7.5 V from pin 3 provides a fixed offset to the signal level. The negative-peak detector does the same type of operation on the signal to apply the negative peak voltage to pin 5 of U1104B.

When the sync polarity is selected to match the sync of the applied video signal (by the user with the A SLOPE switch), the voltage level at the selected input of U1104B is at the middle of the sync-tip voltage. If the wrong polarity is selected, triggering will take place on the video signal. For signal generator signals, the effect may not be noticeable, except for a shift of the trigger point; but if composite video signals are being viewed, the display will be unstable when the wrong polarity is selected.

SYNC COMPARATOR. The incoming composite video signal is applied to the plus input (pin 3) of the Video Sync Comparator (U1102A). The Video Sync Comparator looks at the signal level on pin 2 and compares it with the incoming video signal level. When the incoming level crosses the comparison threshold, the output of U1102A switches state. That state change occurs at the mid level of the sync pulses. The output signal of U1102A (TV LINE) is applied directly to U1104A pin 2 and U1106C pin 1 to be available for selection for the A and the B Trigger systems for TV LINE triggering.

FIELD SYNC FILTER. The filter circuit composed of R1132, R1133, C1106, C1107, and U1102B processes the output of U1102A further to determine when the vertical field sync signal is present. The time constant of the filter elements is such that the line sync pulses between vertical fields cannot move the voltage on U1102B pin 5 across the comparison threshold (ground on pin 6).

During the vertical field sync pulse, the frequency of the serration pulses (line and equalizing) doubles. The filter capacitors will then be discharged enough to go below ground and switch the output state of U1102B. That signal is applied to U1104A pin 1 to be available as the TV FIELD Sync trigger signal for the A Trigger system.

http://www.tobaman.com

SYNC SWITCHING. Solid-state switches U1104A and U1106C provide switching between the TV FIELD and the TV LINE signal for the A Trigger and between TV LINE from A SOURCE and the average DC level of the measurement channel for the B Trigger. The switching states are controlled by the Measurement Processor via the TV FIELD SEL and the B TV TRIG EN control signals from the Auxiliary Control Register (U1103).

DISPLAY AND TRIGGER LOGIC AND PROCESSOR INTERFACE (Diagram 4)

The Display Sequencer or SLIC (slow-logic integrated circuit, U600) performs most of the slow logic functions required to run the display functions. This integrated circuit contains a microprocessor interface, the display sequencer logic circuitry, the trigger holdoff timer, the chop clock, and an interface to the on-screen readout control logic.

The microprocessor interface of U600 provides the capability to serially load the internal control register, write the internal read/write memory, do some limited real-time control over a few sequencer functions, and monitor status information.

The Display Sequencer contains a read/write memory for storing the display states to be sequenced through and logic for sequencing the A and B Sweep displays and trigger sources. The sequencer also provides control signals that are needed to do waveform measurements.

An internal trigger holdoff timer provides a pulse with programmable width that is triggered on at the end of A Sweep (or at the end of B Sweep). The pulse width may be set from 1 μs to greater than 0.5 s, depending on the internal counter divide ratio, and the holdoff oscillator frequency at pin 15.

The chop clock circuit generates a phase-dithered chop clock and blanking signal, derived from an external frequency source. With 10 MHz applied, the chop rate can be 1.25 MHz or 625 kHz, with a blanking time of about 200 ns (625 kHz is used in the 2245A).

The readout interface circuit responds to the readout request and readout blanking inputs, and generates a blanking signal (BLANK, pin 18) to control the Z-Axis Amplifier enabling signals from U602. The chop blanking signal also gets routed through this circuit.

Pin Description

The following is a description of Display Sequencer U600 pin functions (see Figure 3-2 for pin numbers).

DIO: Data IO pin. This pin is tied to the Measurement Processor MB DATA line. Data to be clocked into the control register is presented here, and status data can be read out on this pin when the $\overline{RD}$ input is low (tri-state output). See Table 3-7.

TDI: Trigger data input pin. When A3=A2=1, data on this pin is sent to the DIO pin (when $\overline{RD}$ is low).

$\overline{RD}$: Read enable input (active low). Bringing this pin low causes internal status data (selected with A3-A0) to be presented on the DIO pin for transfer to the Measurement Processor.

$\overline{WR}$: Write enable input (active low). A negative-going pulse on this pin performs actions described in the Table 3-7.

$\overline{SOUT}$: Strobe output pin (active low). When A3, A2, A1, and A0 = 1111, $\overline{SOUT}$ goes low when the $\overline{WR}$ pin is pulled low. Otherwise, $\overline{SOUT}$ is always high.

A3, A2, A1, A0: Address inputs. The ADDR0-ADDR3 selection bits are latched from the Measurement Processor address bus by U2512, Diagram 8.

$\overline{A\ GATE}$: A Sweep Gate input (active low).

$\overline{B\ GATE}$: B Sweep Gate input (active low).

TC: Timing clock input.

LFC: Low-frequency clock input. A signal derived from the calibrator circuit is used for skewing the chop-clock phase.

http://www.ebaman.com

$\overline{\text{ROR}}$: Readout request input (active low). A low causes the CH 1 EN, CH 2 EN, CH 3 EN, CH 4 EN, HD1, HD0, and TS outputs to all go low, and allows the $\overline{\text{ROB}}$ input to have complete control of the BLANK output. If $\overline{\text{ROB}}$ is low when $\overline{\text{ROR}}$ goes low, then the internal timing will be such that the BLANK output will go high quickly enough to blank the display before switching transients can be shown on screen (see the detailed description of the readout interface).

$\overline{\text{ROB}}$: Readout blank input (active low). During readout active time ($\overline{\text{ROR}}$=low), the $\overline{\text{ROB}}$ input is inverted and sent to the BLANK output.

OSC OUT: The external holdoff oscillator output drives this pin. A falling edge causes the internal holdoff counter to increment.

OSC RST: Oscillator reset output. Internal logic causes this output to go high to discharge the external holdoff oscillator timing capacitor at the end of holdoff (see detailed description of the holdoff timer operation).

CH 1 EN: Channel 1 enable output (active high).

CH 2 EN: Channel 2 enable output (active high).

CH 3 EN: Channel 3 enable output (active high).

CH 4 EN: Channel 4 enable output (active high).

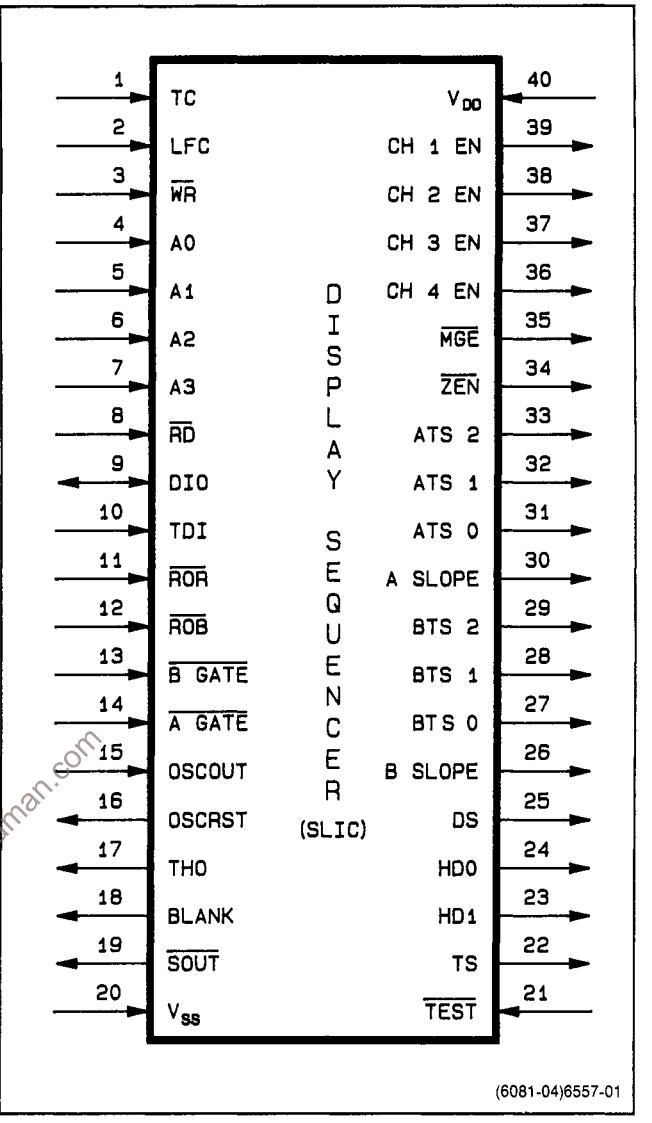

Figure 3-2. Display Sequencer IC (SLIC, U600) pin out diagram.

http://www.ebaman.com

Table 3-7

Display Sequencer (U600) Control Bit Assignments

A3	A2	A1	A0	DIO when $\overline{RD}$ LO	Action when $\overline{WR}$ Strobed
0	0	0	0	Control Reg. msb	DIO clocked into Control Reg. (a)
0	0	0	1	RAM comparator	RAM written from Control Reg.
0	0	1	0	EOSS flag	RAM address incremented (b)
0	0	1	1	EOS signal (c)	RESET is strobed (d)
0	1	0	0	A Gate Detect flag	MRESET is strobed (e)
0	1	0	1	B Gate Detect flag	RAM load mode enabled (f)
0	1	1	0	A Gate Detect flag	A/B GATE-detect flags reset
0	1	1	1	B Gate Detect flag	Set A slope output (g)
1	0	0	0	(h)	Forces B1/B2 Source/Slope/Delay (i)
1	0	0	1	(h)	Forces B Slope output (j)
1	0	1	0	(h)	Sets BLANK output HI (k)
1	0	1	1	(h)	Sets THO output HI (k)
1	1	0	0	TDI data	(see description of $\overline{TEST}$ input)
1	1	0	1	TDI data	(see description of $\overline{TEST}$ input)
1	1	1	0	TDI data	Sets norm B Source/Slope/Delay (l)
1	1	1	1	TDI data	$\overline{SOUT}$ pin gets strobed

http://www.ebaman.com

Notes:

(a) Data is clocked into the control register on the rising edge of $\overline{WR}$.

(b) RAM load mode must be enabled; the address increments on the rising edge of $\overline{WR}$.

(c) EOS (end of sequence) goes high for the last state of any display sequence. EOS is read out for test purposes.

(d) The THO output should be set high when RESET is strobed for proper initialization. This does the following:

a. It initializes the display sequencer back to the first display state (RAM address 000). In ALT VERT Mode, all vertical enable, horizontal enable, and trig source outputs are initialized. In CHOP VERT Mode, the horizontal enable and trig source outputs are initialized, but the vertical enable outputs continue to cycle at the chop clock rate.

b. It resets the EOSS (end of single sequence) flag.

c. It resets the trigger holdoff timer.

(e) Used for initialization, during testing of the device.

(f) A rising edge on $\overline{WR}$ with DIO = 1 enables the RAM load mode; a rising edge on $\overline{WR}$ with DIO = 0 disables the RAM load mode.

(g) A rising edge on $\overline{WR}$ with DIO = 1 sets the A Slope output high; a rising edge on $\overline{WR}$ with DIO = 0 sets the A Slope output low.

(h) Used for device testing only.

(i) A rising edge on $\overline{WR}$ with DIO = 1 forces the B1 Trigger Source, the B1 Slope, and sets the DS output high; a rising edge on $\overline{WR}$ with DIO = 0 forces the B2 Trigger Source, the B2 Slope, and sets the DS output low.

(j) A rising edge on $\overline{WR}$ with DIO = 1 forces the B SLOPE output high; a rising edge on $\overline{WR}$ with DIO = 0 forces the B SLOPE output low. This forcing function takes precedence over the force B1/B2 Source/Slope/Delay feature described in note (i) above. This forcing function is canceled by applying a negative strobe to the $\overline{WR}$ input with the address = 1110.

(k) A rising edge on $\overline{WR}$ with DIO = 1 sets the output high; a rising edge on $\overline{WR}$ with DIO = 0 allows the output to behave normally. (l) A negative pulse on $\overline{WR}$ with address = 1110 will cancel the effects of (i) above and allow the B Source, B Slope, and DS outputs to behave normally.

ATS 2, ATS 1, ATS 0: A Trigger Source Select outputs. These bits either correspond to three bits of the control register, or they track with the vertical channel enable outputs (in ALT Vertical Mode with VERT MODE trigger selected). These outputs change state on the rising edge of the THO output, or when RESET is strobed while THO is high. The encoding scheme is shown in Table 3-8.

Table 3-8
A Trigger Source Select Bits

ATS 2	ATS 1	ATS 0	SOURCE
0	0	0	CH 1
0	0	1	CH 2
0	1	0	CH 1 + CH 2
0	1	1	CH 3
1	0	0	CH 4
1	0	1	Line

A SLOPE: A Trigger slope output.

BTS 2, BTS 1, BTS 0: B Trigger Source Select outputs. These bits correspond to either one of two sets of three bits in the control register, or they can track with the vertical channel enable outputs (in ALT Vertical MODE). These outputs normally change state on the rising edge of the THO output, or when RESET is strobed while THO is high. If B1 or B2 Source/Slope/Delay is being forced, the outputs will correspond directly with one of the two three-bit sets in the control register. The encoding scheme matches that used for the A trigger source select bits shown in Table 3-8.

B SLOPE: B Trigger Slope output. This output is set to either one of two bits in the control register. This output normally changes state on the rising edge of the THO output, or when RESET is strobed while THO is high. It may also be forced high or low by the Measurement Processor via the processor interface.

HD1, HD0: Horizontal display enable outputs. These outputs normally change state on the rising edge of the THO output, or when RESET is strobed while THO is high. The encoding scheme is shown in Table 3-9.

Table 3-9
Horizontal Display Mode Select Bits

HD1	HD0	SOURCE
0	0	Readout displayed
0	1	A Sweep displayed
1	0	B Sweep displayed
1	1	X-Y mode

DS: Delay select output. This output normally changes state on the rising edge of the THO output, or when RESET is strobed while THO is high. It may also be forced by the Measurement Processor via the processor interface. DS high selects the first delay (B1), and DS low selects the second delay (B2).

TS: Trace separation output. This output changes state on the rising edge of the THO output, or when RESET is strobed while THO is high. TS goes high to enable trace separation; TS goes low during a readout request cycle.

$\overline{\text{ZEN}}$: Z-Axis enable output (active low). This output goes low when the ZAP control bit is set high, or when the selected B trigger source channel (as presented on the BTS 2, BTS 1, and BTS 0 output pins) is the same as the channel being enabled for display.

$\overline{\text{MGE}}$: Measurement gate enable output (active low). This output behaves the same way as $\overline{\text{ZEN}}$, except in chop vertical mode, in which MGE stays in a low state. Also, the ZAP control bit has no effect on MGE.

THO: Trigger holdoff output (active high). Outputs the variable holdoff pulse. In single sequence mode, this output will go high after the last A Sweep of the sequence and stay high until RESET is strobed. This output may also be forced high via the Measurement Processor interface.

BLANK: This output is controlled from three sources. At the end of a readout request cycle (when $\overline{\text{ROR}}$ goes high), the BLANK output will be asserted for four to six timing clock periods (to hide vertical source switching transients). Chop blanking pulses can be routed to this output (however, when

http://www.ebaman.com

$\overline{ROR}$ is low, chop blanking is automatically inhibited). Lastly, this output may be forced high via the Measurement Processor interface.

$\overline{TEST}$: Test mode enable input (active low). $\overline{TEST}$ is held high and not used in normal operation. This pin is pulled high to force normal operation, but may be pulled low to enable the test mode. Enabling test mode does the following:

1. Disables single sequence and B Ends A modes, no matter what code is in the control register.

2. Reconfigures the trigger holdoff timer to make it more easily testable (see control register description for control bits H4–H0).

3. A3, A2, A1, A0 = 1100 allows a negative-going pulse on $\overline{WR}$ to reset only the control register.

4. A3, A2, A1, A0 = 1101 allows a negative-going pulse on $\overline{WR}$ to preset control register bits B1–B6.

Control Register Description

The Display Sequencer internal control register is a 26-bit, serial-shift register that receives control-bit data from the Measurement Processor. Table 3-10 lists the control signal name(s) associated with each register bit. Bit number 1 receives the data from the DIO pin (via the Processor Interface) after one low-to-high transition on the $\overline{WR}$ input pin (A3 = A2 = A1 = A0 = 0). Bit number 26 receives this data after 25 more low-to-high transitions on the $\overline{WR}$ input. Bit number 26 is the most-significant bit position of the internal shift register.

Table 3-10
Shift Register 1 Control Bit Data

Bit Nr	Control Signal Name(s)		
1	AS2	RD5	AC3
2	AS1	RD4	AC2
3	AS0	RD3	AC1
4	ZAP	RD2	
5	B1S2	RD1	BC3
6	B1S1	RD0	BC2
7	B1S0		BC1
8	B1SLOPE		BC0
9	B2S2		
10	B2S1		
11	B2S0		
12	B2SLOPE		
13	VM1		
14	VM0		
15	HM1		
16	HM0		
17	DD		
18	SSE		
19	B ENDS A		
20	H4		
21	H3		
22	H2		
23	H1		
24	H0		
25	FSEL		
26	CBEN		

RD5–RD0: Data inputs to the internal RAM. The RAM address comes from a three-bit, binary up-counter. To write data into the RAM, the first six bits are loaded into the control register with the RAM data word. With A3, A2, A1, A0 = 0001, a negative-going pulse on the $\overline{WR}$ input will write the data into RAM. To set the RAM address, the RAM load mode must be enabled. In RAM load mode, a low-to-high transition on the $\overline{WR}$ input (with A3, A2, A1, A0 = 0010) will increment the RAM address by one. There are eight consecutive RAM locations (addresses 000 to 111); the address counter will increment to 111, then wrap around to 000. Strobing RESET resets the counter to 000. See the Display Sequencer detailed description to find out what the RAM outputs do.

The RD5–RD0 bits also go to the inputs of an internal RAM comparator. The RAM outputs are sensed by the other comparator input. If the two inputs match, the comparator output will be high. The RAM comparator output can be read by the Measurement Processor through the processor interface.

AC3–AC1: The A Trigger CPLG select bits. BC3–BC0 are the B Trigger CPLG and SLOPE select bits. To write these bits into the trigger coupling circuits, the Measurement Processor loads the control register as follows: Bits 1, 2, and 3 are set to AC3, AC2,

http://www.ebaman.com

and AC1 respectively, and the A SLOPE output is set to AC0. Bits 5, 6, 7, and 8 are set to BC3, BC2, BC1, and BC0 respectively. The RAM load mode is enabled, the force B1/B2 feature is disabled, and THO is strobed once (or RESET is strobed once while THO is high). At this point, output pins ATS2, ATS1, ATS0, and A SLOPE are set to AC3, AC2, AC1, and AC0 respectively; and output pins BTS2, BTS1, BTS0, and B SLOPE are set to BC3, BC2, BC1, and BC0 respectively. The Measurement Processor then strobes the latches in the Trigger Coupling Select Logic circuits to make the trigger coupling selections. The RAM load mode is then disabled to resume normal Display Sequencer operation.

AS2, AS1, AS0: A Trigger SOURCE select bits. See Table 3-11 for the bit encoding of the control signals when not loading the RAM or coupling circuits.

For any binary code except 111; AS2, AS1, and AS0 are presented on output pins ATS2, ATS1, and ATS0 respectively after a THO rising edge. For binary code 111, the data on the three output pins will correspond to the channel being enabled for display; it alternates as the channel displays alternate and change state on the rising edges of THO. The RAM load mode is disabled to get the A Trigger SOURCE to alternate.

http://www.ebaman.com

Table 3-11
Trigger Source Select

AS2	AS1	AS0	SOURCE
0	0	0	CH 1
0	0	1	CH 2
0	1	0	CH 1 + CH 2
0	1	1	CH 3
1	0	0	CH 4
1	0	1	Line
1	1	0	--
1	1	1	VERT MODE

ZAP: Setting this bit high forces the $\overline{ZEN}$ output low. This bit is low for allow normal operation of the $\overline{ZEN}$ output.

B1S2, B1S1, B1S0: B1 Trigger SOURCE select bits. Bit encoding is the same as the encoding for the A Trigger SOURCE select bits.

B2S2, B2S1, B2S0: B2 Trigger SOURCE select bits. Encoded the same as A Trigger SOURCE select bits, except that code 111 does not select VERT Mode trigger. Selection between B1 SOURCE and B2 SOURCE is normally made with the DS (delay select) output signal. DS = 1 selects B1, and DS = 0 selects B2. If the B1 select bits are 111 and the B1 SOURCE is selected (not forced), then the data on output pins BTS2, BTS1, and BTS0 will track with the selected vertical channel (similar to the A Trigger SOURCE select outputs).

B1 SLOPE, B2 SLOPE: B Trigger SLOPE bits. One of these two bits is presented on the B SLOPE output pin (if B SLOPE isn't being forced), in the same way that the B1 and B2 sources are selected. When B1 SOURCE is selected, then B1 SLOPE is also selected, and B2 SLOPE gets selected when B2 SOURCE is selected.

VM1, VM0: Vertical MODE control bits. See Table 3-12 for encoding.

Table 3-12
Vertical MODE Select

VM1	VM0	MODE
0	0	Not used
0	1	Chop Mode
1	0	Alt Mode (with no measurement)
1	1	Alt Mode (with measurement)

HM1, HM0: Horizontal MODE control bits. See Table 3-13 for encoding.

Table 3-13
Horizontal MODE Select

HM1	HM0	MODE
0	0	A only
0	1	ALT
1	0	B only
1	1	X-Y

Table 3-14

Holdoff Counter Encoding

H4	H3	H2	H1	H0	Count Length	H4	H3	H2	H1	H0	Count Length
0	0	0	0	0	1	1	0	0	0	0	10000
0	0	0	0	1	2	1	0	0	0	1	20000
0	0	0	1	0	5	1	0	0	1	0	50000
0	0	0	1	1	5	1	0	0	1	1	50000
0	0	1	0	0	10	1	0	1	0	0	100000
0	0	1	0	1	20	1	0	1	0	1	200000
0	0	1	1	0	50	1	0	1	1	0	500000
0	0	1	1	1	50	1	0	1	1	1	500000
0	1	0	0	0	100	1	1	0	0	0	100000
0	1	0	0	1	200	1	1	0	0	1	200000
0	1	0	1	0	500	1	1	0	1	0	500000
0	1	0	1	1	500	1	1	0	1	1	500000
0	1	1	0	0	1000	1	1	1	0	0	100000
0	1	1	0	1	2000	1	1	1	0	1	200000
0	1	1	1	0	5000	1	1	1	1	0	500000
0	1	1	1	1	5000	1	1	1	1	1	1[a]

[a] Strobing RESET presets the holdoff counter to 499999 to simplify testing.

http://www.ebanman.com

DD: Dual-delay control bit. DD = 1 for dual delay (delta time), and DD = 0 for single delay.

SSE: SGL SEQ enable. SSE = 1 for single sequence mode or 0 for repetitive mode.

B ENDS A: B ends A enable (active high).

H4, H3, H2, H1, H0: Holdoff time. Encoded as in Table 3-14. With the $\overline{\text{TEST}}$ pin held high for normal operation.)

FSEL: Chop frequency select bit. With 10 MHz on the TC input pin, FSEL = 1 provides a chop frequency of 625 kHz; FSEL = 0 produces 1.25 MHz (625 kHz is used).

CBEN: Chop blank enable bit. CBEN = 1 allows the chop blanking signal to be passed out the BLANK output pin (when $\overline{\text{ROR}}$ is high); CBEN = 0 inhibits chop blanking.

Display Sequencer Operation

The internal RAM is programmed for the desired vertical channel display sequence, for both CHOP and ALT Vertical Modes. In ALT mode, the RAM also controls the horizontal display control outputs. In CHOP mode, the RAM still controls the vertical channel displays, but different logic controls the horizontal display selection.

RAM data bits RD5, RD4, and RD3 are programmed for a particular channel display (see Table 3-15).

Table 3-15
Display Sequencer Channel Select Logic Bits

RD5	RD4	RD3	Channel
0	0	0	CH 1
0	0	1	CH 2
0	1	0	CH 1 + CH 2
0	1	1	CH 3
1	0	0	CH 4

Bit RD2 selects between the A Sweep display and the B Sweep display (only used in ALT Vertical Mode (with measurement). The A Sweep is displayed if this bit is set high (outputs HD1, HD0 = 01), otherwise the B Sweep is displayed (outputs HD1, HD0 = 10). Bit RD1 controls the DS (delay select) output pin in ALT Vertical Mode (with or without measurement). Finally, bit RD0 marks the last state in a display sequence. When the RD0 bit goes high, the sequencer finishes its current state and jumps back to the initial state (RAM address 000 is the initial state). In ALT Vertical Mode, the sequencer will advance to the next state either on each rising edge of the trigger holdoff pulse (ALT Vertical Mode with measurement), or on every other rising edge of the trigger holdoff pulse (ALT Vertical Mode with no measurement).

The first type of ALT Mode is used when there is an intensified zone (with or without an accompanying B Sweep) for only one or two of the displayed channel(s); every display state can be completely specified by programming the RAM properly (no more than eight display states are ever needed for any measurement display sequence; hence, the RAM is limited to eight addresses). The second type of ALT Mode is used when there are intensified zones and B Sweeps for all channels displayed. In this mode, HD1 and HD0 automatically alternate between the A sweep and the B Sweep on each rising edge of the trigger holdoff pulse. Whenever HD1 and HD0 switch from the B Sweep back to the A Sweep, the vertical sequencer advances to its next state. This second type of ALT Vertical Mode is used only when more than eight RAM locations are needed to define a long display sequence in ALT Horizontal Mode.

In ALT Vertical Mode, the vertical and horizontal display enable outputs are initialized as follows: the trigger holdoff output is forced high (via the processor interface), RESET is strobed, then trigger holdoff is unforced to allow sweeps to occur. This procedure ensures that the display enable and trigger source outputs are initialized to the first state of the programmed display sequence.

In CHOP Vertical Mode, the leading edge of the chop blanking pulses advance the vertical display enable outputs. RAM bits RD5, RD4, and RD3 still determine the vertical channel displayed, and RAM bit RD0 marks the last display state in the sequence. RAM bits RD2, and RD1 are not used in CHOP Mode. Other circuitry, clocked by the trigger holdoff pulse, drives the horizontal display control outputs. The same initialization procedure as described above for ALT Vertical Mode is used. However, only the trigger source and horizontal display enable outputs are initialized. The vertical-display-enable outputs cycle at the CHOP rate. Table 3-16 specifies the behavior of the horizontal-display-enable outputs for all horizontal and vertical modes.

Trigger Holdoff Timer

When the B ENDS A control bit is low, the holdoff timer is triggered by the rising edge of $\overline{\text{A GATE}}$. When the B ENDS A control bit is high, the holdoff timer is triggered by either the rising edge of $\overline{\text{B GATE}}$, or the rising edge of $\overline{\text{A GATE}}$, whichever occurs first. The THO output pin will go high immediately, and go low after the programmed number of holdoff oscillator cycles. In SGL SEQ Mode (again, with the $\overline{\text{TEST}}$ input pin high), the EOSS (end of single sequence) flag will go high and the THO output will stay high after the last A Sweep of the programmed sequence. Strobing RESET will reset the EOSS flag, and set the THO output back low again, if THO hasn't been forced high via the Measurement Processor interface.

HOLDOFF OSCILLATOR. A relaxation oscillator circuit formed by U601, Q600, Q601 and associated components is connected between the OSC OUT and OSC RST pins to provide the input count pulses to the holdoff timer. The HOLDOFF voltage applied to the base of Q600 sets up a charging current into timing capacitor C600. When the holdoff timer is inactive, the OSC RST output pin is high, and C600 is held discharged. With the capacitor discharged, the output of the oscillator is held high. When a rising edge of $\overline{\text{A GATE}}$ (or $\overline{\text{B GATE}}$ in B ends A mode) occurs, the OSC RST output will go low and allow the voltage across C600 to ramp up. When this voltage crosses an upper threshold, the output of U601 at pin 7 goes low. This negative transition increments the internal holdoff counter, and causes the OSC RST output to go high, again discharging C600. When the voltage drops below a lower threshold, the oscillator output again goes high to repeat the oscillation cycle. After the last negative transition on the OSC OUT pin for a particular count length, the OSC RST output will go high and stay there until the next time the THO timer is triggered.

http://www.tobaman.com

Table 3-16

Horizontal and Vertical Display Response

Delay and Vertical Modes			Signal Names	HORIZONTAL CONTROL SIGNAL OUTPUTS				Readout Active ($\overline{ROR}$ = 0)
				Readout Inactive ($\overline{ROR}$ = 1)				
				Horizontal Modes (HM1 HM0)				
DD	VM1	VM0		A Only (0 0)	A Alt B (0 1)	B Only (1 0)	X/Y (1 1)	
0	0	0	NSSS (a)	1	2	1	(b)	(c)
			DS	HI	HI	HI	HI	(c)
	or		HD0	HI	(d)	HI	LO	LO
0	0	1	HD1	LO	$\overline{HD0}$	HI	HI	LO
			TS	LO	HD1	LO	LO	LO
1	0	0	NSSS (a)	2	4	2	(b)	(c)
			DS	(d)	(e)	(d)	LO	(c)
	or		HD0	HI	(d)	LO	HI	LO
1	0	1	HD1	LO	$\overline{HD0}$	HI	HI	LO
			TS	LO	HD1	LO	LO	LO
0	1	0	NSSS (a)	(f)	(f)	(f)	(b)	(c)
			DS	HI	HI	HI	HI	(c)
			HD0	HI	(d)	LO	HI	LO
			HD1	LO	$\overline{HD0}$	HI	HI	LO
			TS	LO	HD1	LO	LO	LO
0	1	1	NSSS (a)	(g)	(g)	(g)	(b)	(c)
			DS	HI	HI	HI	HI	(c)
			HD0	HI	(h)	LO	HI	LO
			HD1	LO	$\overline{HD0}$	HI	HI	LO
			TS	LO	HD1	LO	LO	LO
1	1	0	NSSS (a)	(f)	(f)	(f)	(b)	(c)
			DS	(i)	(i)	(i)	(i)	(c)
			HD0	HI	(h)	LO	HI	LO
			HD1	LO	$\overline{HD0}$	HI	HI	LO
			TS	LO	HD1	LO	LO	LO
1	1	1	NSSS (a)	(g)	(g)	(g)	(b)	(c)
			DS	(h)	(h)	(h)	(h)	(c)
			HD0	HI	(h)	LO	HI	LO
			HD1	LO	$\overline{HD0}$	HI	HI	LO
			TS	LO	HD1	LO	LO	LO

http://www.ebaman.com

NOTES:

(a) NSSS = Complete A Sweep cycles in a single sequence.

(b) Not applicable in single sequence mode.

(c) Signal state not affected by readout.

(d) Signal changes state after each rising edge of THO; initialized to a high state in single sequence mode.

(e) Signal changes state after every other rising edge of THO; it is initialized to a high state in SGL SEQ mode.

(f) NSSS = Two times the number of states programmed into the vertical sequencer. In ALT Vertical Mode with no measurement, the vertical sequencer advances to its next state at the end of every other A GATE.

NOTES (cont):

(g) NSSS = The number of states programmed into the vertical sequencer.
(h) Programmable with the vertical sequencer.
(i) Programmable with the vertical sequencer. There are two A Sweeps per vertical display state.

Sweep Gate Detection

Display Logic IC U600 also contains sweep gate detect latches that can be read out and reset via the Measurement Processor interface. The A GATE detect latch output will go high on the rising edge of $\overline{\text{A GATE}}$ after a falling edge of $\overline{\text{A GATE}}$, if the $\overline{\text{MGE}}$ signal is low (i.e., the latch is armed by $\overline{\text{MGE}}$). The B GATE detect latch output goes high when $\overline{\text{B GATE}}$ goes low (level sensitive). The A GATE latch is reset on the leading edge of the A/B RESET signal, so that the latch will not miss an A GATE occurring before the end of the latch reset interval. The B GATE latch resets when the A/B RESET signal is low.

Chop Clock

The clock frequency applied to the TC input pin is either divided by 8 (FSEL = 0), or divided by 16 (FSEL = 1), producing a positive-going pulse at the BLANK output pin (when enabled) with a width equal to about two times the period of the clock signal on the TC input. To produce phase skewing, the chop frequency divider circuit is forced to skip ahead by four TC clock periods on a rising edge of $\overline{\text{A GATE}}$. This skipping is gated on and off by applying a low-frequency clock signal (about 1 kHz from the Calibrator circuit) to the LFC (low-frequency clock) input pin. Internally, the LFC signal is divided by two, and when the resulting square wave is high, count skip-ahead is enabled.

Readout Interface

The Readout Interface accepts inputs from the $\overline{\text{ROR}}$ and $\overline{\text{ROB}}$ pins, and drives the BLANK output pin. When $\overline{\text{ROR}}$ is high, the BLANK output is controlled by the chop blank signal (when enabled by the CBEN control bit).

When the $\overline{\text{ROR}}$ input is low, chop blanking is disabled and the $\overline{\text{ROB}}$ input is inverted and allowed to control the BLANK output. When the $\overline{\text{ROR}}$ input goes from low to high, the BLANK output remains connected to the readout blank signal for an additional four to six TC clock periods. Normally, the $\overline{\text{ROB}}$ input will be low during this time so that the BLANK output will be high to mask vertical source-switching transients. The HD1, HD0, and TS outputs are disabled two to four TC periods after $\overline{\text{ROR}}$ goes low, and are again enabled two TC periods before the BLANK output is disconnected from the readout blank signal ($\overline{\text{ROB}}$). For any readout request cycle, the $\overline{\text{ROR}}$ input remains low for greater than six TC clock periods. Relative timing of $\overline{\text{ROR}}$, BLANK, HD0 and HD1 (HDx), TS, and vertical channel enables (CHxEN) is shown in Figure 3-3.

http://www.eBaman.com

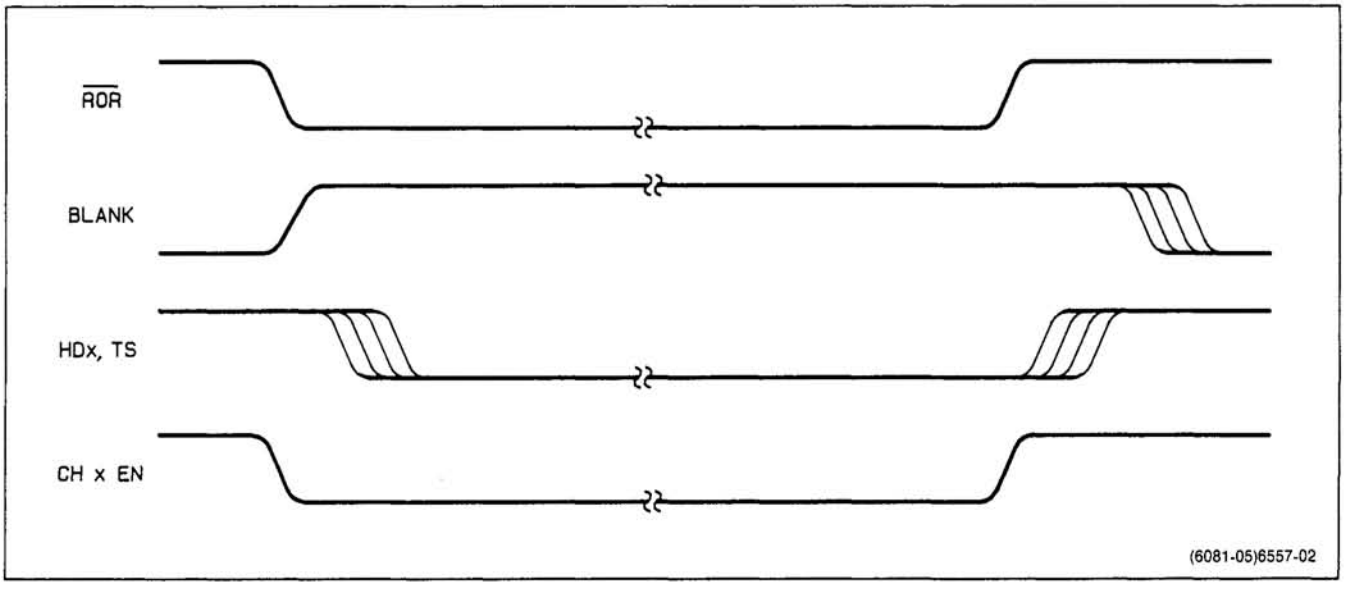

Figure 3-3. Readout interface relative signal timing.

Trigger Logic IC (FLIC)

The Trigger Logic IC or FLIC (fast-logic integrated circuit, U602 Diagram 4) does most of the fast logic functions required to run the oscilloscope. The functions are: A Sweep control, B Sweep control and measurement gate generation, Z-Axis control, and trigger status detection.

The A Sweep logic generates the A Sweep gate signal (A GATE), and provides trigger status information about the state of the A Trigger. The B Sweep logic interfaces to the Delay Time Comparators (Diagram 3) and generates the B Sweep gate (B GATE) and measurement gate signals. There is also some logic that monitors the B Trigger signal status when making voltage measurements with the B Trigger circuit. The Z-Axis control logic provides outputs for controlling the crt beam intensity.

The Trigger Logic circuit is done in an ECL (emitter-coupled logic) gate array, and all inputs and outputs are compatible with standard ECL components.

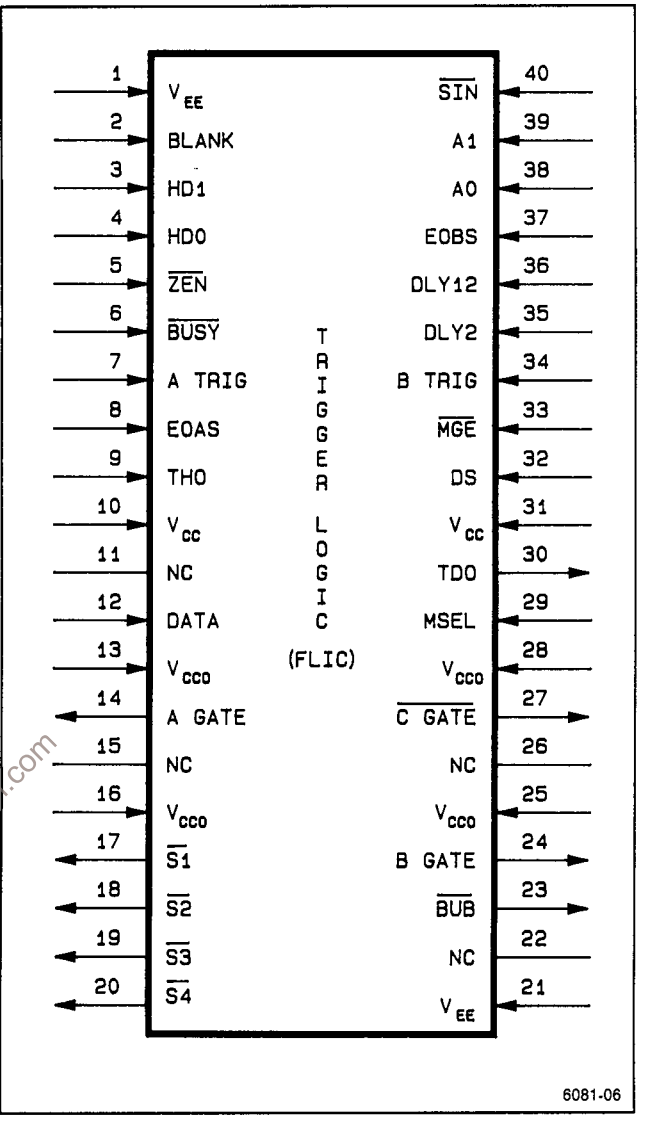

Figure 3-4. Trigger Logic IC (FLIC, U602) pin out diagram.

Pin Description

The following is a description of the fast logic pin outs (see Figure 3-4).

BLANK: Blanking input, from the Display Logic IC (U600).

HD1, HD0: Horizontal display select inputs, from the Display Logic IC.

$\overline{ZEN}$: Z-Axis enable input, from the Display Logic IC. Active low.

$\overline{BUSY}$: Counter busy signal. Not used in the 2245A.

ATRIG: A Sweep trigger input.

EOAS: End of A Sweep. This signal goes high when the A Sweep ramp crosses its end-of-sweep threshold.

THO: Trigger holdoff input from the Display Logic IC.

$\overline{SIN}$: Strobe input. Latches data into the internal register. Active low.

A1, A0: Address inputs. See Table 3-17 for addressing codes.

EOBS: End of B Sweep. This signal goes high when the B Sweep ramp crosses its end-of-sweep threshold.

http://www.ebaman.com

DLY12: Input from first delay comparator. The comparator for the delay input switches from low to high after the end of either the first or the second sweep delay.

DLY2: Input from second delay comparator. This comparator normally switches from low to high after the end of the second sweep delay (in dual-delay mode).

B TRIG: B Sweep trigger input.

$\overline{\text{MGE}}$: Measurement gate enable input from the Display Logic IC. Active low.

MSEL: Measurement select input. MSEL=1 causes the DLY12 signal rising edges to sample the B TRIG input in strobed volts measurements. MSEL=0 selects the DLY2 signal rising edges.

DS: Delay select signal from the Display Logic IC. DS=1 selects first delay.

DATA: Data input to the internal, control shift register.

$\overline{\text{S1}}$: Crt beam-intensity control output. Turns on the beam current for the A Sweep displays. Active low.

$\overline{\text{S2}}$: Crt beam-intensity control output. Turns on the beam current for the B Sweep displays. Active low.

$\overline{\text{S3}}$: Crt beam-intensity control output. Turns on the beam current for the A Sweep intensified zone displays. Active low.

$\overline{\text{S4}}$: Crt beam-intensity control output. Turns on the beam current for the Readout displays. Active low.

A GATE: A Sweep gate output. Starts the A Sweep ramp. Active high.

TDO: Trigger data output. Data to be read is selected via the A1 and A0 inputs (see Table 3-17).

B GATE: B Sweep gate output. Starts the B Sweep ramp. Active high.

$\overline{\text{BUB}}$: B Sweep unblanking output. Active low.

$\overline{\text{C GATE}}$: Measurement gate output. Not used externally in the 2245A.

Table 3-17

Trigger Logic IC Addressing Logic

A1	A0	Output of TDO pin	Action when $\overline{\text{SIN}}$ Strobed
0	0	Strobed Volts Latch	DATA clocked into Control Reg
0	1	Auto baseline Latch	Resets Auto baseline Latch
1	0	A Trigger Latch	Resets A Trigger Latch
1	1	Peak Volts Latch	Resets Peak Volts Latch

http://www.ebaman.com

Trigger Logic IC Control Register Description

The control register of U602 is an 8-bit shift register that receives input from the DATA pin. Bit 1 receives the data on a low-to-high transition on the $\overline{\text{SIN}}$ pin (A1 = A0 = 0). Bit 8 receives this data after seven more low-to-high transitions on the $\overline{\text{SIN}}$ pin. Bit 8 is the msb of the control register. Table 3-18 lists the control signal name associated with each control register bit.

DM1, DM0: These bits select the delay mode (see Table 3-19).

BRUN: This bit determines whether the B Sweep is in RUNS AFTER delay mode or Triggered After delay mode. BRUN=1 selects RUNS AFTER Mode.

PM1, PM0: These bits select the peak volts detection mode as shown in Table 3-20.

ZM1, ZM0: These bits determine the intensified zone mode. See the Z-Axis logic discussion.

ARUN: This bit determines whether the A Sweep is in the free-run mode or in the triggered mode. ARUN=1 selects the free-run mode.

Table 3-18
Control Register Signal-bit Names

Bit	Name
1	DM0
2	DM1
3	BRUN
4	PM0
5	PM1
6	ZM0
7	ZM1
8	ARUN

Table 3-19
Delay Mode Selection Control Bits

DM1	DM0	Delay Mode
0	0	First delay set to zero
0	1	First and second delays set to zero
1	0	Normal delay mode
1	1	B Sweep disabled

Table 3-20
Peak Volts Detection Mode Logic

PM1	PM0	Peak Detection Mode
0	0	Nongated
0	1	Gated from end of delay to end of A Sweep
1	0	Gated with $\overline{\text{C GATE}}$ [a]
1	1	Gated with A GATE

[a] $\overline{\text{C GATE}}$ not used externally.

A Sweep Logic

When ARUN is high, the A Sweep logic works as follows. A high on the THO input causes the A GATE output to go low. As soon as THO goes low, the A GATE output will go high and the A Sweep runs. At the end of the A Sweep there is a low-to-high transition on the EOAS input. That sets the the internal end-of-A-sweep latch causing the A GATE output to go low, and the A Sweep shuts off. This state exists during sweep retrace and the baseline stabilization period until the end of holdoff when the THO input once again goes high. That resets the end-of-A-sweep latch and starts another A Sweep cycle. Normally, the falling edge of A GATE will cause an externally generated pulse to be presented on the THO input, thus completing the loop and allowing the A Sweep to free-run (auto-level and auto triggered mode when the sweep is not triggered).

When ARUN is low, the operation is similar except that after a pulse on the THO input, A GATE won't go high until a low-to-high transition is presented on the A TRIG input (triggered sweep mode).

For either free-run or triggered modes, THO going high will cause the A GATE output to immediately go low, if the end-of-A-Sweep latch is set or not. Once the end-of-A-Sweep latch has been set, no more A Sweeps can happen until the THO input is pulsed (at the end of the holdoff). The end-of-A-Sweep latch can only be set with the EOAS input when A GATE is high.

The A Sweep logic of U602 also monitors the A TRIG input to latch certain A Trigger events. One latch (the auto-baseline latch) will set on any low-to-high transition on the A TRIG input. Another latch (the A Trigger latch) is level sensitive and will set when the A TRIG input is high. Both latches may be read out through the TDO (trigger-data out) pin, selected by the A1 and A0 address input pins. That data is applied to the TDI (trigger data in) pin of U600 and placed in the Display Logic IC's internal register to be read by the Measurement Processor. Both latches may also be reset via the $\overline{\text{SIN}}$ pin (see description of A1, A0, and $\overline{\text{SIN}}$ input pins).

http://www.ebaman.com

B Sweep Logic

The B Sweep logic functions about the same as the A Sweep logic, except that more signals must be monitored to determine when the B Sweep can run. When DM1 and DM0 = 11, the B Sweep can't run at all. When DM1 and DM0 = 10, the B Sweep won't be allowed to run or trigger until the DLY12 input goes high while the A GATE signal is also high (the normal delayed sweep mode). When DM1 and DM0 = 01, the B Sweep will be allowed to run or trigger immediately after the A GATE signal goes high (no B Sweep delay). When DM1 and DM0 = 00, then the B Sweep will be allowed to run or trigger immediately after the A GATE signal goes high, if the DS (delay select) input is high. If DS is low, the B Sweep is allowed to run or trigger as soon as the DLY12 input goes high while the A GATE signal is also high.

The B Sweep logic behaves as follows. The B GATE signal goes high and $\overline{\text{BUB}}$ (B Sweep unblanking) goes low together when the appropriate conditions (described in the preceding paragraph) are met. A low-to-high transition on the EOBS input will then set the end-of-B-sweep latch, causing $\overline{\text{BUB}}$ to go high. B GATE doesn't go low until the A GATE signal goes low. This is used internally to generate the $\overline{\text{S2}}$ and $\overline{\text{S3}}$ outputs in some modes, and is used externally to carry out the B ends A mode.

The DLY12 input goes to a level-sensitive latch; if A GATE is high and DLY12 momentarily goes high, the latch will be set, so that the DLY12 input does not need to be held high throughout the sweep cycle. A high level on the THO input will cause the A GATE signal to go low. That resets this latch and causes the reset of the rest of the sweep logic, forcing B GATE low and $\overline{\text{BUB}}$ high.

The DLY2 input also goes to a level sensitive latch. This second latch also gets reset when A GATE goes low. Together with the DLY1 latch output, A GATE, and the $\overline{\text{MGE}}$ input, the $\overline{\text{C GATE}}$ output signal gets generated (not used externally in the 2245A). $\overline{\text{C GATE}}$ goes low if A GATE is high, the DLY1 latch has been set, the DLY2 latch is still reset, and the $\overline{\text{MGE}}$ input is low.

Z-Axis Logic

This logic drives the Z-Axis control outputs ($\overline{\text{S1}}$ – $\overline{\text{S4}}$). These outputs have the following control action:

- $\overline{\text{S1}}$ Turns on the A intensity current switch (active low).
- $\overline{\text{S2}}$ Turns on the B intensity current switch (active low).
- $\overline{\text{S3}}$ Turns on the A intensified current switch (active low).
- $\overline{\text{S4}}$ Turns on the Readout intensity current switch (active low).

Table 3-21 describes what the $\overline{\text{S1}}$ – $\overline{\text{S4}}$ outputs do as a function of ZM1, ZM0, HD1, HD0, $\overline{\text{A GATE}}$, $\overline{\text{BUB}}$, $\overline{\text{C GATE}}$, $\overline{\text{BUSY}}$, BLANK, and $\overline{\text{ZEN}}$.

ECL-to-CMOS Level Shifters

The Trigger Logic IC U602 is an ECL device. Its output signal swing is the standard ECL range of about 0.6 V. All the ECL logic devices in the 2245A are powered from the +5 V supply rather than a -5 V supply. The resulting output voltage swing is from about 4.5 V to about 3.9 V between the high and low ECL logic levels. As U602 must pass signals to the Display Sequencer IC (U600) at CMOS highs and lows (about 3.9 V and 0 V respectively in this application), logic level translators are required. That job is done by an identical translator circuit for each of the three signals that must be sent. The circuit action of U603C, Q604, and Q605 (the $\overline{\text{A GATE}}$ translator) is described.

http://www.ebaman.com

Table 3-21
Z-Axis Switching Logic

ZM1	ZM0	HD1	HD0	$\overline{S1}$	$\overline{S2}$	$\overline{S3}$	$\overline{S4}$	Display Mode
0	0	0	0	1	1	1	(c)	Readout
0	0	0	1	(a)	1	(e)	1	A Sweep intensified by BUSY
0	0	1	0	1	(b)	1	1	B Sweep
0	0	1	1	(c)	1	1	1	X/Y
0	1	0	0	1	1	1	(c)	Readout
0	1	0	1	(a)	1	(d)	1	A Sweep intensified by C GATE
0	1	1	0	1	1	1	1	Blank
0	1	1	1	(c)	1	1	1	X/Y
1	0	0	0	1	1	1	(b)	Readout
1	0	0	1	(a)	1	(b)	1	A Sweep intensified by BUB
1	0	1	0	1	(b)	1	1	B Sweep
1	0	1	1	(c)	1	1	1	X/Y
1	1	0	0	1	1	1	(c)	Readout
1	1	0	1	(a)	1	1	1	A Sweep no intensified zone
1	1	1	0	1	1	1	1	Blank
1	1	1	1	(c)	1	1	1	X/Y

Notes

(a) = BLANK or $\overline{\text{A GATE}}$
(b) = BLANK or $\overline{\text{A GATE}}$ or $\overline{\text{BUB}}$ or $\overline{\text{ZEN}}$
(c) = BLANK
(d) = BLANK or $\overline{\text{A GATE}}$ or $\overline{\text{C GATE}}$ or $\overline{\text{ZEN}}$
(e) = BLANK or $\overline{\text{A GATE}}$ or $\overline{\text{BUSY}}$ or $\overline{\text{ZEN}}$
or is a logical-or function.

http://www.ebaman.com

The single-ended A GATE output signal of U602 at pin 14 is applied to pin 4 of U603B. With its other input pin left open, U603B is used as a line driver only to produce a differential output signal. That differential signal is applied to the bases of a differential amplifier pair of pnp transistors (Q604 and Q605). The output signal is taken across R612 in the emitter of Q604. The emitter of Q605 is connected directly to ground. When the A GATE output of U602 is high (at 4.5 V), the voltage applied to the base of Q604 is 4.5 V, and the voltage on the base of Q605 is 3.9 V. These voltage levels bias Q605 on and Q604 off, with a resulting output level across emitter resistor R612 of 0 V to the $\overline{\text{A GATE}}$ (active low) input of U600. When the A GATE output of U602 goes low at the end of the sweep, the bias voltage levels on Q604 and Q605 reverse, and Q604 is biased on (and Q605 off). Signal current through emitter resistor R612 develops a voltage of about 3.9 V (the unasserted level) to the $\overline{\text{A GATE}}$ input of U600.

Display Logic Clock

The Display Logic clock signal at 10 MHz is generated by a transistor oscillator circuit composed of Q608, Y600, and associated components. The frequency of oscillation is controlled by a ceramic resonator, Y600, in the feedback path from the collector to the base of Q608.

A AND B SWEEPS AND DELAY COMPARATORS (Diagram 5)

Sweep Control Shift Registers

Two serial shift registers provide the control interface between the Measurement Processor and the A and B Sweep circuitry. Control bits loaded into registers U302 for A Sweep and U303 for B Sweep are serially clocked from the SR DATA line by the SR1 CLK pulse. The states of the loaded bits select the A and B Sweep timing by choosing the correct charging current and timing capacitor to provide the full range of sweep speeds. Other control bits loaded into the two registers select the delay voltage applied to the Delay Comparators and the output voltage from the VOLTS CAL circuit (used for measurement SELF CAL). Extra bits are shifted through the two shift registers into the Auxiliary Data Register (U1103, Diagram 3) via the AUX DATA signal line to control the trigger bandwidth, the TV Sync Detector switching, and the functions of 10X MAG, X-Y display, and Vertical Comparator enabling.

A and B Sweep Timing

Refer to Figure 3-5 for a simplified schematic of the A Sweep circuitry.

TIMING RESISTORS. The Sweep Timing resistors in resistor pack R313 are shared between the A Sweep and the B Sweep circuitry; those in resistors pack R321 are divided between the two sweep circuit. Timing Resistor selection is done by multiplexers U308 and U307 for the A Sweep and by U310 and U311 for the B Sweep. The multiplexers are driven by the Measurement Processor via control bits loaded into Shift Register 1 (U302 and U303). (See Table 3-22 for the control bit coding.)

SEC/DIV VAR CIRCUIT. Variable sweep speed is controlled by the TIME VAR voltage applied to operational amplifier U309B. The amplifier controls the current passing through Darlington transistor Q301 to the voltage divider formed by resistor pack R313. The voltages at the taps of the voltage divider set the forward bias on the charging-current pass transistor, Q307, via operational amplifier U304. When the SEC/DIV VAR control is in its detent (calibrated) position, diode CR301 is reverse biased, and the divider formed by R311 and R314 between the +2.5 V reference and ground precisely sets the input voltage to the noninverting input of U309B. With a fixed voltage output from U309B, the current through Q301 and R313 is also a fixed value. When the SEC/DIV VAR control is rotated out of its detent position, the voltage at the junction of R309 and R310 decreases to forward bias CR301. The input voltage to U309B and, therefore, the current to R313 decreases in proportion to the amount of rotation of the SEC/DIV VAR control. A decreasing voltage at the output taps of R313 decreases the charging current through Q307 to increase the sweep ramp time.

A AND B SWEEP TIMING CAPACITORS. The timing capacitor selection circuitry is similar for the A and the B Sweep, but the B Sweep has fewer range steps and doesn't require two selectable capacitors. Only the A Sweep timing capacitor selection is described; like components in the B Sweep circuit do the same job.

http://www.ebaman.com

Timing capacitance for the A Sweep is made up of a combination of fixed, variable, stray, and selectable components. Sweep timing for the fastest A Sweep speeds is done with a combination of the fixed, variable, and stray capacitance and the selectable charging current supplied through R321, U308, Q307 and Q330. When the slower sweep speeds are selected, additional capacitors must be switched into the circuit to produce a longer charging time. The capacitors that are always in the A Sweep charging path are C315 (a fixed capacitor), C314 (a variable capacitor used to adjust the A Sweep timing at the fastest sweep speeds), and the stray circuit capacitance.

The base-to-collector junction capacitance Q330 changes as the voltage between the base and collector of Q330 increases during ramp up. At the fastest A Sweep speeds, that change would affect the timing at the start of the charging ramp. To compensate for the junction-capacity effect of Q330, transistor Q328 (connected as a diode) is added between the charging current path and the A Sweep Buffer output. The capacitive current through the reverse-biased junction of Q328 adds current to the output to make up for the current required to charge the base-to-collector capacity of Q330 in the input of the Sweep Buffer.

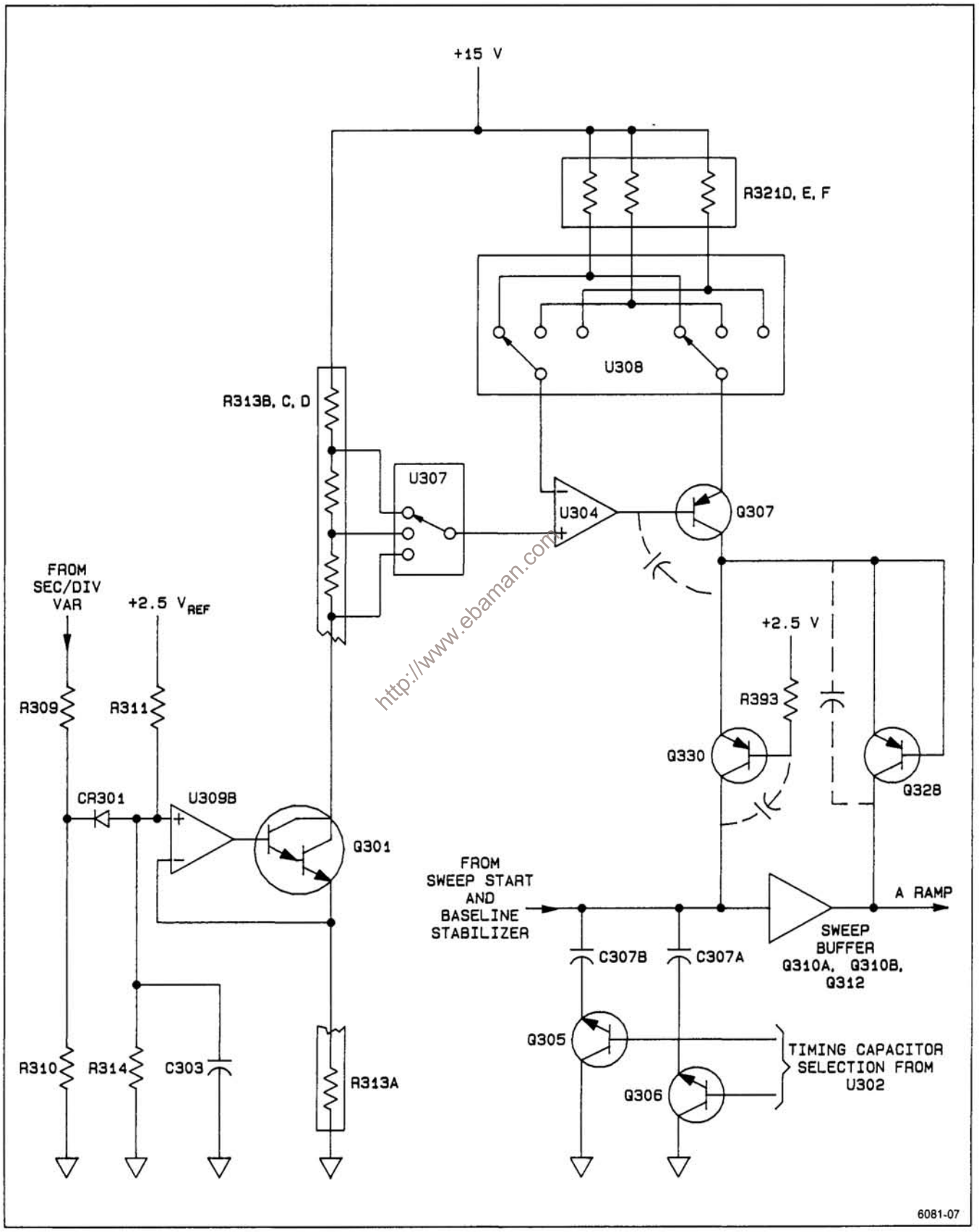

http://www.ebaman.com

Figure 3-5. Simplified Sweep Circuit.

The selectable sweep timing capacitors come in a matched set of three capacitors, two for the A Sweep timing (C307A and C307B) and one for the B Sweep timing (C307C). When added capacitance is needed for a sweep speed setting, the Measurement Processor loads selection control bits into Shift Register 1 (U302 for the A Sweep) that turn on either Q305 or Q306 or both. Assume that Q305 is biased on by a high control bit from pin 5 of U302. Capacitor C307B is then added in parallel to the capacitors in the charging path, and a longer ramp time is needed to reach the end-of-sweep voltage level. Control bits selecting the charging current are also loaded at the same time. See Table 3-22 for the A Sweep timing and control bit selections (as0-as5) and Table 3-23 for the B Sweep bit selections (bs0-bs4).

Baseline Stabilizer

The job of the Baseline Stabilizer circuit (Q302, Q303, and Q304 for the A Sweep and Q315, Q316, and Q317 for the B Sweep) is to tie the start of the sweep ramps to the same fixed level for each sweep. Operation of the A Sweep stabilizer is described.

A differential circuit formed by Q302 and Q303 compares the A Sweep feedback signal on the base of Q303 against the reference voltage on the base of Q302 to control the base bias current to Q304 and, thereby, the sweep baseline level. Operational amplifier U309A generates the fixed reference that the baseline voltage level is compared against. The reference voltage amplifier has a gain of -0.8 (less than one and inverted); and, with +2.5 V applied to the inverting input and the noninverting input grounded, the output level is -2 V. Capacitor C305 filters the output to eliminate noise that could cause sweep start jitter. The filtered voltage is applied to the junction of R317, R354, and C305 and references both Baseline Stabilizer circuits.

A and B Sweep Start

The A and B Sweep Start circuits operate the same way, with like components in each doing the same job; only the A Sweep Start circuit is described. Sweep time may be divided into three periods: baseline, run-up, and retrace (see Figure 3-6). Sweep start and length of sweep run-up is controlled by the A GATE and $\overline{\text{A GATE}}$ signals from the Trigger Logic IC (U602, Diagram 4).

A GATE SIGNALS. The A GATE and $\overline{\text{A GATE}}$ signals are applied via 8.2 V zener diodes (VR301 and VR302) to the bases of Q308 and Q309 in a differential amplifier configuration. The input circuit to the differential pair level shifts the ECL signals (4.3 V to 3.4 V) to the proper biasing levels (-3.9 V to -4.8 V) for the bases of the differential amplifier transistors. Transistor Q326 in the emitter circuit of Q308 and Q309 is the current source for the differential pair. Transistor Q311 is part of the bias circuit for Q326 and provides feedback to the base of Q326 that controls the current provided to Q308 while the sweep is being held at the baseline level.

BASELINE STATE. In the baseline state (during sweep holdoff), Q308 and Q304 are on and Q309 is off, and the level at the collector of Q308 is held at -2.8 V. That voltage is buffered by the A Sweep Buffer (with about a 0.7 V rise across the base-to-emitter junction of Q312) and fed back to the base of Q303 where it is compared with the -2 V reference produced by operational amplifier U309A. If the baseline voltage is too low compared to the output of U309A, Q303 (the retrace current regulator) is biased on a little harder. Additional base current is available to Q304, and it conducts harder to raise the output baseline voltage to the reference voltage level. The opposite action occurs if the baseline voltage is too high.

A smaller feedback loop formed by Q311 and R305 controls the gain of Q326 so that the standing current available (about 3 mA) is just enough to keep Q304 biased on during the baseline state. When the states of the gate signals reverse, Q309 is turned on and Q308 turns off. The standing current then conducts through Q309 to rapidly pull the base of Q304 down to shut it off. When the base voltage reaches about -2.7 V, Q333 conducts. That action clamps the base voltage of Q304 (and the collector voltage of Q309) at that level and prevents Q309 from saturating so that it will have a short turn-off time when the sweep ends.

http://www.ebamanuals.com

Table 3-22

A Sweep Timing Selections

SPEED	I_{timing}	C_{timing}	as5	as4	as3	as2	as1	as0	Min H.O.
10 ns	4 mA	C314/C315	0	0	1	0	1	0	2.0 µs
20 ns	2 mA	"	0	0	0	1	1	0	2.0 µs
50 ns	800 µA	"	0	0	0	0	1	0	2.0 µs
100 ns	400 µA	"	0	0	1	0	0	1	2.0 µs
200 ns	200 µA	"	0	0	0	1	0	1	2.0 µs
500 ns	80 µA	"	0	0	0	0	0	1	2.0 µs
1 µs[a]	40 µA	"	0	0	1	0	0	0	2.0 µs
2 µs[a]	20 µA	"	0	0	0	1	0	0	4.0 µs
5 µs[a]	8 µA	"	0	0	0	0	0	0	10 µs
1 µs	4 mA	C307B	0	1	1	0	1	0	2.0 µs
2 µs	2 mA	"	0	1	0	1	1	0	4.0 µs
5 µs	800 µA	"	0	1	0	0	1	0	10 µs
10 µs	400 µA	"	0	1	1	0	0	1	20 µs
20 µs	200 µA	"	0	1	0	1	0	1	40 µs
50 µs	80 µA	"	0	1	0	0	0	1	100 µs
100 µs	40 µA	"	0	1	1	0	0	0	200 µs
200 µs	20 µA	"	0	1	0	1	0	0	400 µs
500 µs	8 µA	"	0	1	0	0	0	0	1.0 ms
1 ms	4 mA	C307A	1	0	1	0	1	0	2.0 ms
2 ms	2 mA	"	1	0	0	1	1	0	4.0 ms
5 ms	800 µA	"	1	0	0	0	1	0	10 ms
10 ms	400 µA	"	1	0	1	0	0	1	20 ms
20 ms	200 µA	"	1	0	0	1	0	1	40 ms
50 ms	80 µA	"	1	0	0	0	0	1	100 ms
100 ms	40 µA	"	1	0	1	0	0	0	200 ms
200 ms	20 µA	"	1	0	0	1	0	0	400 ms
500 ms	8 µA	"	1	0	0	0	0	0	1 s

[a] Used only during horizontal characterization.

http://www.ebaman.com

Table 3-23

B Sweep Timing Selections

SPEED	I_{timing}	C_{timing}	bs4	bs3	bs2	bs1	bs0
10 ns	4 mA	C329/C330	0	1	0	1	0
20 ns	2 mA	"	0	0	1	1	0
50 ns	800 µA	"	0	0	0	1	0
100 ns	400 µA	"	0	1	0	0	1
100 ms	200 µA	"	0	0	1	0	1
100 ms	80 µA	"	0	0	0	0	1
1 µs	40 µA	"	0	1	0	0	0
2 µs	20 µA	"	0	0	1	0	0
5 µs	8 µA	"	0	0	0	0	0
10 µs	4 mA	C307C	1	1	0	1	0
20 µs	2 mA	"	1	0	1	1	0
50 µs	800 µA	"	1	0	0	1	0
100 µs	400 µA	"	1	1	0	0	1
100 µs	200 µA	"	1	0	1	0	1
100 µs	80 µA	"	1	0	0	0	1
1 ms	40 µA	"	1	1	0	0	0
2 ms	20 µA	"	1	0	1	0	0
5 ms	8 µA	"	1	0	0	0	0

http://www.ebaman.com

RUNUP STATE. With Q304 and Q308 off, the charging current from the timing circuit can begin charging the timing capacitors, and the voltage at the emitter of Q304 ramps up linearly. That ramp is buffered by the A Sweep Buffer (U310A and B and Q312) to drive the Horizontal Output Amplifier. As the ramp is running up, it is being compared with a fixed reference level by the Sweep End Comparators. When the ramp level reaches the comparison level, the A SWP END signal goes high. That signals the Trigger Logic IC, U602, to end the A GATE signal, and the sweep is switched to the retrace state. The sweep ramp is also being fed back to the base of Q303. At the point in the ramp that the base voltage of Q303 exceeds that on the base of Q302 (the −2 V baseline reference), Q303 is biased off and Q302 conducts. This biasing condition disables the feedback loop that stabilizes the baseline voltage level, and it remains off until the feedback voltage during the retrace period falls back to near the −2 V baseline reference voltage on the base of Q302.

RETRACE STATE. At the end of the sweep, the gate signals reverse state. Transistor Q309 is biased off, and Q308 is biased on. Retrace current supplied by Q308 quickly returns the voltage across the timing capacitor to a little below the baseline voltage level. That retrace current is regulated by Q311 and Q326 to produce a rapid, yet rate-controlled retrace. At the point of the fall in feedback voltage where Q303 starts to turn on, base current becomes available to Q304 to turn it on, and the feedback loop that stabilizes the voltage at the baseline level again becomes active.

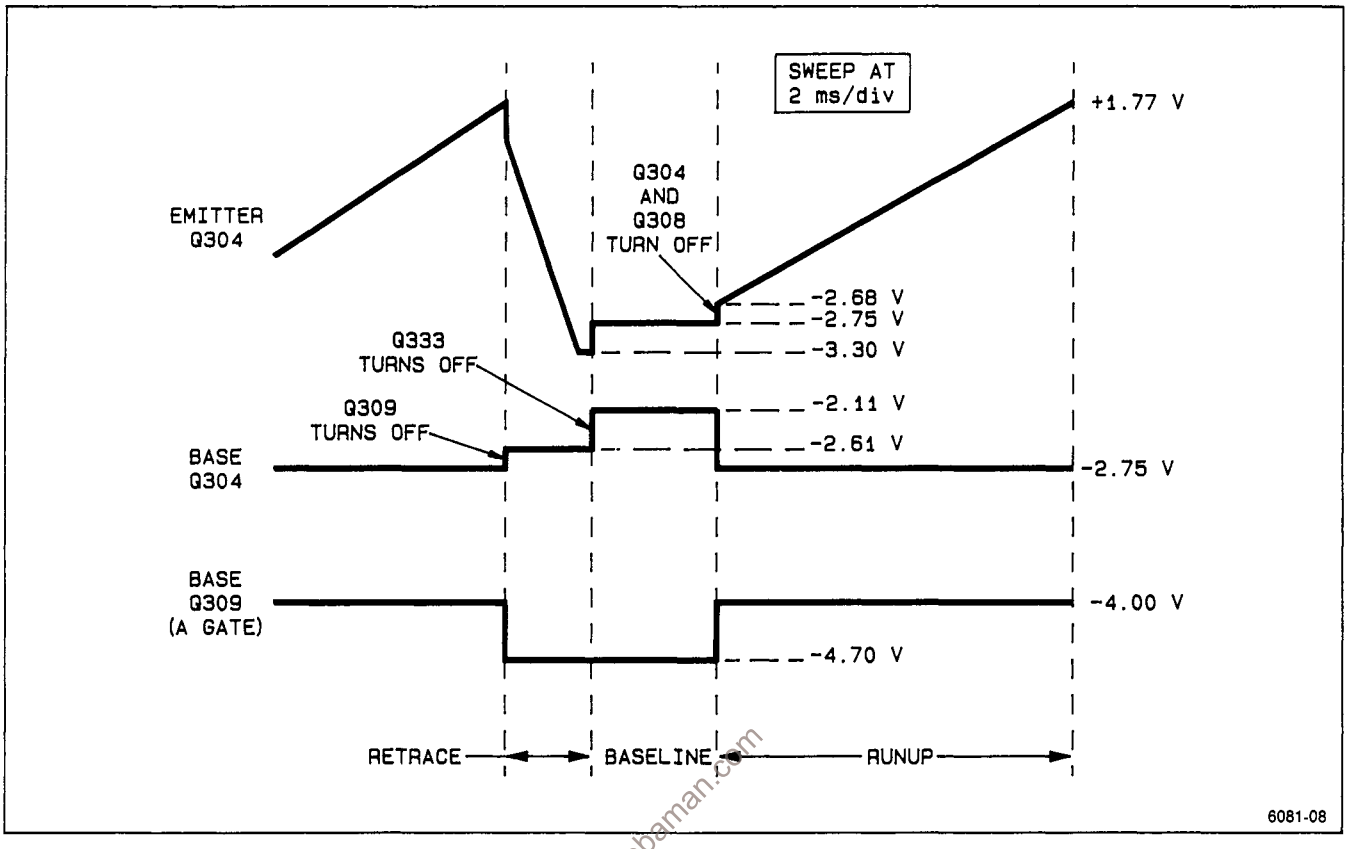

Figure 3-6. A Sweep Start circuit waveforms.

http://www.ebaman.com

A and B Sweep Buffers

The A Sweep Buffer (Q310A and B, and Q312) and B Sweep Buffer (Q323A and B, and Q325) buffer the voltage ramp as the timing capacitors charge. In the A Sweep circuit, Q310A and Q310B are high-impedance FET amplifiers driving emitter follower Q312. The output signal from the emitter of Q312 is applied to the Delay Time Comparators, the End-of-Sweep Comparators, fed back to the Baseline Stabilizer circuit, and sent to the Horizontal Output Amplifier (Diagram 6) as the A RAMP horizontal deflection signal.

Sweep End Comparators

The sweep ramp signals must horizontally deflect the electron beam across the entire face of the crt. Comparators U316A, B, C, and D determine when the A and B Sweeps have reached the required amplitude. These comparators check the sweep voltage against the reference level that defines the end of the sweep and generate the A SWP END and B SWP END signals when that level is reached. The sweep-end signals are applied to the Trigger Logic IC (U602) so that device knows when the sweeps are done. The Trigger Logic IC then switches the states of the A GATE or the B GATE signal (as appropriate) to reset the sweep circuitry to its baseline level.

Delay Time Comparators

When the A Sweep ramp runs, its amplitude is compared against two delay levels by the comparators of U313. The differential outputs of the REF delay comparator change states when the A Sweep crosses the first delay level. The differential output signal from the delay comparator is applied to ECL line receiver U315C. That device has a high gain and produces a fast-rise signal at an ECL level. When the DLY END 0 (reference delay completed) is received by the Trigger Logic IC (U602, Diagram 4), a B GATE is produced to start the B Sweep in RUNS AFTER B Trigger mode. That B Sweep displays the applied waveform at the first (reference) delay setting. At the end of the delay in RUNS AFTER mode, the Trigger Logic IC begins watching for a B Trigger signal that must occur before a B GATE is produced.

The differential output of the second delay comparator in U313 changes states when the A Sweep

ramp at pin 9 crosses the second (delta) delay level applied to pin 6. At that point, the DLY END 1 signal is produced at the output of U315A (pin 2) and applied to U602. A second B GATE signal is then produced to start another B Sweep ramp to display the signal at the delta delay setting.

Delay Time Switching

The DELTA DELAY and REF DELAY voltage level are applied to multiplexer U301 from the DAC circuit. The Measurement Processor established those voltages based on the settings of the CURSOR/TIME POSITION controls made by the user from the front panel. Switch section U301A is held permanently switched to direct the DELTA DELAY signal to its output pin.

HORIZONTAL OUTPUT AMPLIFIER (Diagram 6)

Horizontal Preamplifier

Horizontal Preamplifier IC U802 converts single-ended horizontal signals (A sweep, B sweep, horizontal readout, and X-Axis) into differential outputs to drive the crt horizontal deflection plates. The horizontal preamplifier signals are selected by the HD0 and HD1 logic signals from Display Sequencer U600 on Diagram 4. Magnified sweep, beam find, horizontal positioning, and horizontal gain adjustments (X1 and X10) are provided in U802 and associated components.

The function of each pin of U802 is as follows:

RO (Pin 1): RO HORIZ. Input for horizontal component of the readout display.

GA1 (Pin 2): Adjustment of R825 sets the horizontal X1 gain.

A RAMP (Pin 3): Input for the A Sweep signal.

GND (Pin 4): Ground connection for U802.

B RAMP (Pin 5): Input for the B Sweep signal.

MAG (Pin 6): Selects X10 magnified sweep when high or normal sweep when low. Magnified mode is selected when in X-Y horizontal mode.

X (Pin 7): X-AXIS. This is the X-Axis signal input when in X-Y horizontal mode. The signal source is the CH 1 trigger signal from U421A (Diagram 3). Adjustment of R827 sets the gain of the X-Axis signal.

HD0 (Pin 8): Pin 8 (HD0) and pin 11 (HD1) are logic lines that select the horizontal input signal to output differentially at pins 18 and 19. Table 3-24 gives the selection logic.

Table 3-24
HD0 and HD1 Logic

HD1	HD0	Horiz Signal Selected
0	0	RO HORIZ
0	1	A SWEEP
1	0	B SWEEP
1	1	X-AXIS

V_{EE} (Pin 9): -5 V supply to U802.

GA10 (Pin 10): Adjustment of R826 sets the horizontal X10 gain.

HD1 (Pin 11): See the description for HD0 above.

ROUT (Pin 12): Horizontal Preamplifier differential output signal for the right deflection plate.

LOUT (Pin 13): Horizontal Preamplifier differential output signal for the left deflection plate.

BF (Pin 14): The BEAM FIND signal from U503 (Diagram 4) switch the Beam Find feature on or off. BEAM FIND on reduces the horizontal deflection to within the graticule area. Vertical deflection is also reduced and the intensity is set to a fixed viewing level to aid in locating off-screen, over-deflected, or under-intensified displays.

POSITION (Pin 15): Input for the horizontal position control signal. Multiplexer section U301B switches to reduce the range of the Horizontal POSITION control to match that of the Vertical POSITION controls when in X-Y horizontal mode. When X-Y display mode is selected, a low $\overline{XY}$ signal on Pin 9 of U301B connects the pin 5 input to the horizontal position input of U802. The signal at pin 5 is a reduced horizontal positioning signal produced by the R353/R358 voltage divider.

V_{CC} (Pin 16): +7 V supply to U802.

http://www.tabaman.com

Driver Amplifiers

The differential output current signal from U802 passes through common-base current amplifiers Q809 and Q810. These transistors drive current-to-voltage converters Q803-Q804 and Q807-Q808. Emitter followers Q804 and Q803 convert the current signal to a voltage signal to drive the complementary-FET output amplifiers, Q801 and Q802, to produce the negative-going deflection voltage. Emitter followers Q808 and Q807 convert the other side of the differential current to drive Q805 and Q806 to produce the positive-going horizontal deflection voltage.

The circuit of Q804 and Q803 is configured to respond rapidly to a negative-going feedback signal; the circuit of Q807 and Q808 is configured to respond quickly to the positive-going feedback signal. Zener diode VR802 and associated resistors R843 and R844 maintain the collector bias of Q803 and Q808 at 24 V.

Magnifier registration and horizontal readout centering is set by MAG REG potentiometer R809. Adjustment of R809 is done to balance the currents into the emitters of Q809 and Q810 to obtain the correct horizontal position of the readout within the graticule display area.

Output Amplifier

The differential circuitry of both sides of the Horizontal Output Amplifier is similar; operation of only one side of the amplifier is described. Complementary-FET amplifiers Q801 and Q802 produce the negative-going horizontal signal to drive the left deflection plate. Two transistors are used to provide adequate power handling. Since the two gates are at different bias levels, signal voltage is applied to the gate of transistor Q801 via C803. Resistor R828, connected between the source and drain of Q801, is a parallel current path around Q801 that balances the power-handling requirements of the two FETs. The amplifier FETs are high gain devices, and the overall gain must be reduced to maintain circuit stability at the faster sweep rates. To provide the high-frequency gain reduction, resistor R850 is in series with C802, from the source of Q802 to the drain of Q801, to damp the driving-energy to Q801 supplied by C802 during the sweep retrace transitions. Feedback resistor R806 provides positive feedback and sets the overall gain of the output amplifier stage. A parallel trimmer capacitor across the feedback resistor, C807, adjusts the 2 ns sweep timing for its best linearity. Impedance matching to the deflection plate and additional signal damping is provided by R802.

As the gate voltage of Q802 increases to follow the input ramp signal, the drain voltage goes negative from about 87 V toward the 15 V source voltage. At the same time, the signal on the gate of complementary-FET Q801 is reducing the current through Q801, thereby allowing its source voltage to fall. At the end of the ramp signal, the input voltage falls, and through the positive feedback, Q802 is rapidly biased off. That also biases Q801 on, and the energy stored in C802 quickly returns the deflection plate voltage back to its starting point.

Common-Mode Stabilizer

Operation amplifier U801A compares the node voltage at the junction of R820, R821, and R822 to ground. Its output drives the amplifier input common-mode point (at the junction of R811 and R812). The purpose of this dc feedback circuit is to keep the average voltage level on the right and left horizontal deflection plates set to the center of the amplifier's dynamic operating range (about 70 V).

Z-AXIS, CRT, PROBE ADJUST, AND CONTROL MUX (Diagram 7)

Z-Axis and Auto Focus Amplifiers

The Z-Axis and Auto Focus Amplifiers circuits operate on the same principle and both get their drive signal from the Z-Axis Focus Driver. However, the differences are enough that both circuits are described.

Z-AXIS AMPLIFIER. Intensity-control signal current from the Z-Axis/Focus driver is applied to the Z-Axis amplifier via Q2707. That transistor acts as a current buffer amplifier. The input signal line is clamped at 5.4 V by Q2715 to prevent an overdrive of the Z-Axis circuit. The Z-Axis Amplifier output transistors consist of Q2701 and Q2702 on one side of the complementary-symmetry totem-pole output amplifier and Q2703 and Q2704 on the other side. Two transistors are used on each side to divide the power handling requirements needed to drive the crt control grid. The crt grid capacity is large and requires a relatively large amount of power to change the intensity level quickly.

In the base circuit of Q2704, CR2705 prevents the base-to-emitter voltage from exceeding 0.6 V. Zener diode VR2701 dc level-shifts the signal voltage level at the emitter of Q2705 for proper biasing of Q2704. The ac signal components are bypassed around VR2701 by C2703. Base biasing for Q2702 and Q2703 is taken from a series-resistance divider formed by R2711, R2712, R2713, and R2714 between ground and the +130 V supply. Base

http://www.ebaman.com

biasing for Q2701 is provided by R2715 and R2716 in series between ground and the +130 V supply.

A negative-going input signal to the base of Q2705 causes that transistor to decrease conduction, and the voltage at the top of C2705 goes negative following the input signal. Transistor Q2701 is biased on harder by the negative transition, and Q2704 decreases in conduction. At the Z-Axis output signal line (collector of Q2702), the increasing conduction causes the voltage to rise towards the +130 V supply level. A positive-going input signal has the reverse effect on the output signal. The full output-voltage swing of about 60 V is produced by a 3 mA current change of the Z-Axis Focus/Driver signal current.

Gain of the Z-Axis Amplifier stage is set by the feedback through R2708 and R2709 from the collector of Q2702 to the base of Q2705. The amplifier is compensated by the variable capacitor (C2704, Z-Axis Response) in parallel with the feedback resistors.

BEAM FIND. The Z-Axis portion of the BEAM FIND circuit consists of R2705 and Q2706. When BEAM FIND is active, Q2706 is biased on. This clamps the Z-Axis signal line via R2706 and raises the voltage at the base of Q2705 to a level that produces a bright trace.

Auto Focus Amplifier

The Auto Focus Amplifier (Q2708, Q2709, Q2711, Q2712, and Q2713) uses a sample of the Z-Axis/Focus Driver signal current from W2701 to drive the auto-focus circuit. The input signal is inverted by Q2708 to drive Q2711 in a complementary fashion to Q2705 in the Z-Axis Amplifier circuit (as the opposite circuit action must happen to produce the correct auto-focus response). The auto-focus output amplifier is similar to the Z-Axis amplifier, but it uses only one complementary transistor on each side (not as much power is needed to drive the focus grid as needed to drive the intensity grid).

Dc Restorers

The Z-Axis and the Auto Focus DC Restorers are similar in operation. Both circuits are described, but only the added portions of Auto Focus circuitry are included in the discussion of the Auto Focus circuit.

The Dc Restorers set the crt control-grid and focus-grid biases and couple the ac and dc components of the Z-Axis and the Auto Focus Amplifier outputs to the crt grids. Direct coupling of the Z-Axis and Auto Focus signals to the crt control grid is not employed because of the high potential differences involved. Refer to Figure 3-7 during the following discussion.

Z-AXIS DC RESTORER. Ac drive to the Z-Axis Dc Restorer circuit is obtained from pin 12 of T2204. The drive voltage has a peak amplitude of about ±130 V at a frequency of about 18 kHz and is coupled into the Z-Axis Dc Restorer circuit through R2722 and C2713. The cathode of diode CR2704 is biased by Grid Bias potentiometer R2719 and referenced to ground via R2720. The ac-drive voltage is clamped to the voltage set by the Grid Bias potentiometer wiper whenever the positive peaks forward bias diode CR2704. Capacitor C2710 prevents significant loading of the potentiometer wiper voltage when CR2704 conducts.

The Z-Axis Amplifier output voltage, which varies between +16 V and +66 V, is applied to the Dc Restorer at the anode of CR2703. The ac-drive voltage holds CR2703 reverse biased until the voltage falls below the Z-Axis Amplifier output voltage level. At that point, CR2703 becomes forward biased and clamps the junction of CR2703, CR2704, and C2713 to the Z-Axis output level. Thus, the 18 kHz ac-drive voltage is clamped at two levels to produce a roughly square-wave 18 kHz signal with a positive dc-offset level.

The Dc Restorer is referenced to the -2750 V crt cathode voltage through CR2702 and R2723. Initially, both C2712 and C2711 charge up to a level determined by the difference between the Z-Axis output voltage and the crt cathode voltage. Capacitor C2712 charges from the Z-Axis output through R2721, R2723, CR2702, and CR2703, to the crt cathode. Capacitor C2711 charges through R2723 (a series damping resistor), CR2702, and CR2701 to the crt cathode.

During the positive transitions of the ac drive (from the lower clamped level toward the higher clamped level) the charge on C2712 increases due to the rising voltage. The voltage increase across C2712 is equal to the amplitude of the positive transition. The negative transition is coupled through C2712 to reverse bias CR2702 and forward bias CR2701. The increased charge of C2712 is then transferred to C2711 as C2712 discharges toward the Z-Axis output level. Successive cycles of the ac input to the Dc Restorer charge C2711 to a voltage equal to the initial level plus the amplitude of the clamped square-wave input.

http://www.ebaman.com

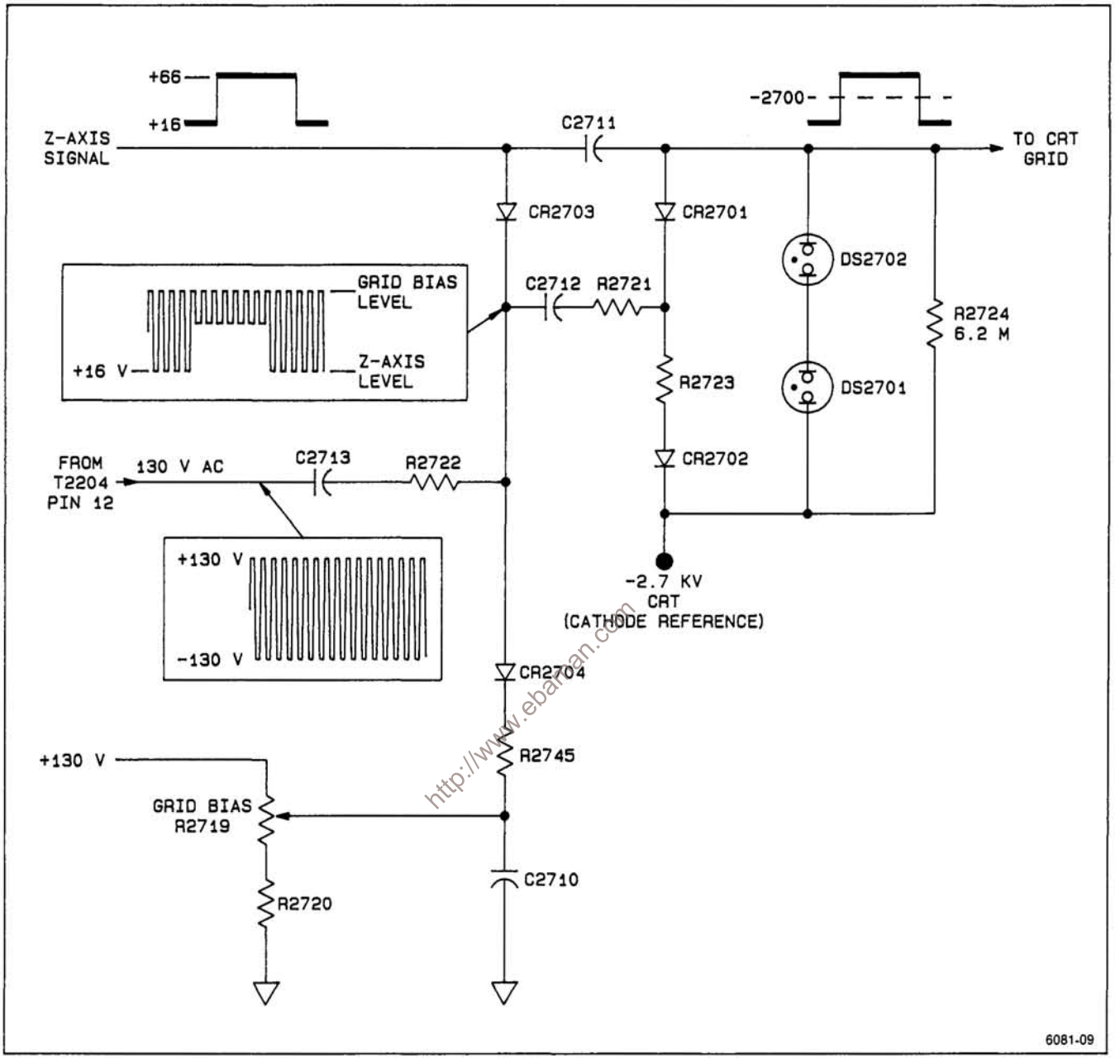

Figure 3-7. Simplified diagram of the DC Restorer circuitry.

The charge held by C2711 sets the control-grid bias voltage. If more charge is added to that already present on C2711, the control grid becomes more negative (display dimmer). Conversely, if less charge is added, the control-grid voltage level becomes closer to the cathode-voltage level, and the display becomes brighter. During periods that C2712 is charging, the crt control-grid voltage is held constant by the long time-constant discharge path of C2711 through R2724.

Fast-rise and fast-fall transitions of the Z-Axis output signal are coupled to the crt control grid through C2711 to start the crt writing-beam current toward the new intensity level. The Dc Restorer output level then follows the Z-Axis output-voltage level to set the new bias voltage for the crt control grid.

Neon lamps DS2702 and DS2701 protect the crt from excessive grid-to-cathode voltage if the potential on either the control grid or the cathode is lost for any reason.

AUTO FOCUS DC RESTORER. The action of the Auto Focus circuit has to be in reverse of the action of the Z-Axis circuit. The differential transistor pair of Q2708 and Q2709 provides drive to the Auto Focus Amplifier that is inverted in polarity to the Z-Axis signal. As the intensity increases (more beam current), the focus grid bias must become more positive to maintain the focus of the beam. Also, since the focus grid operates at a less negative level than the control grid, the Auto Focus DC Restorer is referenced to the -2750 V supply via a voltage divider chain.

The FOCUS potentiometer (R2758) voltage is taken across the middle resistor of the divider string to provide an adjustable focus voltage that sets the nominal focus level. Capacitor C2758 filters the reference supply voltage for the focus circuit.

Volts Cal Signal Source

This circuit provides the precision voltages required for setting the voltage measurement constants during the SELF CAL routine. Ground is connected to the vertical input when GND Input Coupling is selected.

Five voltages are selected from a precision voltage divider, R921, and multiplexed through U931 to the vertical inputs at the appropriate time during the SELF CAL routine. Selection is controlled by three binary coded lines (VOLT CAL 0, 1, 2) from U303. Those control bits and the selected output voltage may be checked one at a time by running the VOLT REF exerciser from the Service Menu.

Control Multiplexer

Multiplexer U506, controlled by Data Latch U2313 on Diagram 11, selects the A INTEN, B INTEN, and READOUT control levels and probe code voltages to be sent on the PROBE MUX signal line to multiplexer U2309 on Diagram 11. The bit coding is shown in Table 3-25. The selected output from U2309 is applied to the A-to-D Converter (U2306, Diagram 11) where it is digitized and sent to the Measurement Processor.

Table 3-25
Front-Panel Multiplexer Channel Select Bits

CONTROL LINE			Analog Signal Selected
POT7	POT6	POT5	
0	0	0	A INTEN
0	0	1	RO INTEN
0	1	0	CH 1 PROBE
0	1	1	CH 2 PROBE
1	0	0	CH 3 PROBE
1	0	1	CH 4 PROBE
1	1	0	B INTEN
1	1	1	ANALOG GND

http://www.tbmanuals.com

Scale Illumination

Front-panel SCALE ILLUM control R905 varies the base current of Q905, Q907, and Q908 to set the intensity levels of the scale illumination bulbs (DS901, DS902, DS903).

NOTE

Bulb life is extended by keeping SCALE ILLUM control set low or off except when full intensity is required.

Probe Adjust Circuit

The Probe Adjust circuit generates a 0.5 V square wave signal at about 1 kHz. Operational amplifier U930A has a gain of about 4. The +2.5 V reference on its noninverting input produces a little over 10 V at the output pin. That voltage is divided by the voltage divider formed by R936, CR936, and R937 for a peak amplitude of the signal of 0.5 V during the time CR936 is forward biased. When CR936 is reverse biased by the output of U930B, the Probe Adjust output voltage is pulled down to 0 V through R937 to ground.

Operational amplifier U930B is a free-running oscillator circuit with a period of about 1 ms. The oscillator frequency is determined mainly by the charging time constant of C935 and R935. The voltage divider formed by R938, R934, and R939 divides the +15 V supply to provide a positive voltage on pin 5 of the oscillator to get the circuit into oscillation. (When the circuit is oscillating, the feedback signal switches the pin 5 voltage between about +8 V to 0 V.) The gain of the amplifier is high enough to drive pin 7 to the positive supply voltage level at about 14 V, and the signal voltage level on pin 5 rises to a little over 8 V from the feedback current supplied by R933. The CLK 1K signal taken from the junction of R934 and R939 is supplied to U600 and is used to skew the chop-clock frequency. The skew prevents the oscilloscope from triggering on the chop frequency when displaying multiple traces in CHOP Mode.

At that level CR935 is reverse biased, and CR936 is forward biased (by the output of U930A) to pass the Probe Adjust high level output signal current. Charging current through feedback resistor R934 charges C935 up from 0 V toward the output voltage level. As soon as the charge on C935 (and the voltage on pin 6 of U930B) reaches the voltage level on pin 5, the output level at pin 7 drops to about −5 V, and C935 must then begin discharging to the new voltage level. At that point CR935 is forward biased and that reverse biases CR936 so that the Probe Adjust output voltage drops to 0 V. Resistor R940, in series with CR935, limits current flow to protect U930 and CR935 in the event of a static discharge to the Probe Adjust output connector.

Crt

The Trace Rotation adjustment, R911, varies the current through the Trace Rotation coil. The Trace Rotation coil is located between the crt face and the vertical and horizontal deflection plates, and it affects both the vertical and horizontal alignment of the trace.

The Geometry adjustment, R2784, varies the voltage level on the horizontal deflection-plate shields to control the overall geometry of the display (minimizes bowing of the display).

The Astigmatism adjustment, R2788, varies the voltage level on the astigmatism grid to obtain the best-focused display over the whole face of the crt.

MEASUREMENT PROCESSOR (Diagram 8)

The Measurement Processor circuitry includes the Processor (U2501), the System RAM (U2521), the System ROM (U2519), communication bus latches and transceivers, the Address Decoding circuitry, and the Power-On Reset IC (U2502).

Power-On Reset

The +5 V supply is monitored by U2502 to generate the reset signals throughout the instrument. These reset signals initialize the states of the logic devices and ensure that memory writes to any of the RAM spaces cannot occur until the +5 V supply is up to its correct operating level. The RESET signal output at pin 6 is initially high during power up (as soon as the voltage has reached the operating level of the RESET IC, U2502). That high signal is inverted by U2506C to produce the $\overline{\text{SYS RESET}}$ signal. The $\overline{\text{SYS RESET}}$ signal holds Processor U2501 in its reset state.

The $\overline{\text{SYS RESET}}$ signal also resets and initializes the Readout Processor (U2400, Diagram 9). At pin 5 of U2502, a $\overline{\text{RESET}}$ signal is generated. That signal biases Q2507 off to prevent System RAM U2521 from being selected by any random states that might occur on the address lines during reset as the voltage is rising.

About 5 ms after the +5 V supply reaches the operating level required for the Processor, the RESET condition is removed, allowing the Processor to operate. At power off (and for a momentary drop in the +5 V supply), when the +5 V supply falls below the safe operating level of the logic devices, the RESET condition occurs to prevent random operation.

Measurement Processor

FUNCTION. Measurement Processor U2501 is a multitask device. Its major functions are the following:

1. Continually refreshes the front-panel indicator LEDs. One column of the six-column LED matrix is refreshed every 2.048 ms.
2. Continually scans the front-panel switch settings, sensing rotation of rotary switches and closures or openings of momentary-contact switches. One column of the six-column switch matrix (the same column number of LEDs being refreshed) is read every 2.048 ms.
3. Communicates with the Readout Processor and Readout RAM to set attributes for each readout field, put text into each field, and turn the readout fields on or off.
4. Scans the front-panel pots and sets control voltage levels. The Measurement Processor

http://www.obaman.com

selects a pot to be scanned by connecting it to Comparator U2306 (Diagram 11) in the D-to-A circuitry. The Measurement Processor does a successive-approximation A-to-D conversion on each pot, using the DAC (U2302) to output the search values to the Comparator. Pot values are scanned, processed, and converted to analog control values by the DAC. The analog levels from the DAC are output to the controlled devices via sample-and-hold circuits (U2304, U2305 on Diagram 11).

5. Sets up the hardware state of the instrument, including shift registers 0 and 1, BEAM FIND, and the operating states of U600 (SLIC) and U602 (FLIC). This setup takes place as needed for every change of a front-panel momentary-contact or rotary-contact switch.

6. Keeps track of trigger status and controls the trigger levels when in AUTO LEVEL mode. It uses FLIC (U602) to find the A Trigger status (writing to FLIC to reset the A Trigger latch, and reading from it to get the status). It uses SLIC (U600) to find the B Trigger status (writing to SLIC to reset the B Gate latch, and reading from it to get the status). To reacquire the trigger level (positive and negative peaks of the trigger source waveform) it uses the Trigger ICs (U421 and U431), and the Trigger Comparators in FLIC (it writes to FLIC to reset the Trigger comparator latches, and reads from FLIC to get the status of the latches). To switch between free-running and triggered mode in AUTO LEVEL and AUTO trigger modes, it writes to the control register in FLIC; it switches to triggered mode when trigger frequency is sufficiently high and to free-run mode when too low.

7. When ⊢ SEC ⊣, ⊢ 1/SEC ⊣, and ⊢ VOLTS ⊣ measurements are running, a new digital value is displayed, and the cursor or delay-zone position is changed only when the user changes the setting of one of the continuous-rotation CURSOR/TIME POSITION controls.

8. Controls the AUTOSET function by setting up the vertical, horizontal, triggering, and crt controls to obtain a usable display based on the input signal characteristics.

9. Calibrates the measurement system. The vertical and horizontal gains of the instrument are set by manual potentiometer adjustments; therefore, the Processor does not control the match between the waveform display and the graticule. However, it does adjust the measurement results to compensate for any error in the vertical or horizontal gain. (An example of this is that there could be more than 0.5% error in matching a time base signal to the graticule, but less than 0.5% error in a time measurement done on that signal).

In the Time Base calibration routine, the Measurement Processor uses the TB Cal signal, the Trigger circuitry, the A Sweep system, and U602 (FLIC) to find the match between the delay levels (REF DELAY and DELTA DELAY) and edges of the calibration signal. In the Vertical System calibration, the Processor uses the Voltage Reference Generator (U931, Diagram 7), the Readout System, the Vertical Preamplifiers, the Delay Line Driver, and the Vertical Comparator (U702) to find the match between Readout REF CURSOR and DELTA CURSOR levels and vertical outputs generated by the preamplifiers. It uses the Voltage Reference Generator, the Vertical Preamplifiers, and the Trigger circuitry to find the match between trigger levels and trigger signals picked off from the Vertical Preamplifiers.

MEASUREMENT PROCESSOR SIGNALS. Table 3-26 is a listing of signal name and function of the Measurement Processor signals.

http://www.ebamanuals.com

Data Buffers

BUS 0 BIDIRECTIONAL BUFFER. Buffer U2515 communicates the serial bit data to and from the Measurement Processor. Seven data lines of the eight available are used in this application. The remaining one is connected to the +5 V supply to prevent random states and noise from affecting the other data lines in the device. The buffer is enabled via U2503B when both pins 38 (MCS0) and 39 ($\overline{DEN}$) of the Processor are low. The direction of transfer is controlled by the DT/$\overline{R}$ output of the processor.

BUS 1 BIDIRECTIONAL DATA BUFFER. Data communication to and from the Measurement Processor is via Buffer U2514. Direction of the data transfer is controlled by the DT/$\overline{R}$ (Data Transmit/$\overline{Received}$) output from the Measurement Processor. Data enabling occurs when pin 39 ($\overline{DEN}$) goes low while pin 38 (MCS0) is high.

BUS ARBITRATION GATES. The Bus Arbitration logic (U2503A and B, and U2506D) controls which Bus Buffer is enabled for communication with the Measurement Processor. This control logic is

necessary since both buffers cannot be active at the same time. Bus 1 (U2514) is the eight-bit data communication bus, and Bus 0 (U2515) uses seven bits to communicate single-bit data to the Measurement Processor. On the Bus 0 AD0 signal line, the Measurement Processor sends the serial MB DATA to each of the operating mode Shift Registers and to SLIC (U600) and FLIC (U602). Additional arbitration is provided by U2503C to produce a $\overline{\text{SLIC RD}}$ strobe when the Measurement Processor wants to read the status of the Display Controller.

Address Latches

MULTIPLEXED AD BUS ADDRESS LATCH. Since the AD0 through AD7 bits are multiplexed between address and data information, the addressing information needs to be latched to hold it for stable addressing (demultiplexed). The ALE (Address Latch Enable) signal from the Measurement Processor (pin 61) goes high when the address bits are stable, and the bits are latched into U2513. The device is permanently enabled by the grounded enable pin.

NONMULTIPLEXED ADDRESS BUS ADDRESS LATCH (U2512). Some of the nonmultiplexed address bits are also latched to maintain them between ALE strobes. The latching also prevents address line problems on the Main board from locking up the Measurement Processor. From U2512, latched addresses ADDR0–ADDR3 (A12–A15) are routed to the Display Controller (U600) for addressing the internal registers in that device. Those address lines are also applied to U501 (Diagram 4) for additional decoding to load the Analog Control Shift Registers with the serial data supplied from the MB DATA signal line. Two address lines (A16–A17) are latched in U2512 for use by the System ROM U2519.

Table 3-26
Measurement Processor Signals

http://www.ebamar.com

Signal Name	Signal Function
$\overline{\text{SYS RESET}}$	Master reset for the Processor board.
CLK 8M	8 MHz clock for the Readout and DAC Processors.
AD0–AD7	Multiplexed address/data lines for the Measurement Processor.
A8–A15	Address lines for the Measurement Processor.
A16–A17	Multiplexed address/status lines.
D0–D7	Data lines for Bus 1 (to memory and readout).
ADDR3–ADDR0	Latched addresses to Main board.
$\overline{\text{RO INTR}}$	Indicates the Readout System is busy when asserted.
$\overline{\text{DAC INTR}}$	Indicates the DAC Subsystem is busy when asserted.
MB RETURN	Return data from the Main board Shift Register 2.
SW BD DATA	Data from the switch board.
AD COMP	Output of the A-to-D Converter Comparator, U2306.
MB DATA	Bidirectional data line to/from the Main board.
TB CAL	Time-base calibration signal to trigger circuit.

Measurement Processor ROM

The operating code for the Measurement Processor is stored in the System ROM (U2519). Immediately after the Power On Reset ends, the Measurement Processor fetches the first command from the reset vector and begins running the program.

Measurement Processor RAM

The Measurement Processor RAM (U2521) provides storage space for intermediate-step calculation results, the front-panel settings, store/recall system setups, and the system calibration constants. The Processor RAM is battery backed up so that data stored during operation remains intact during periods of power off. When the instrument is turned on again, the stored front-panel settings return the oscilloscope to the same operating state that was present at power off. The stored calibration constants preserve the accuracy of the measurement system (assuming the instrument is warmed up and was warmed up when the SELF CAL routine was last done). If the backup battery is dead, or if the stored calibration constants are lost for some other reason, the instrument will do a SELF CAL at power on. This restores accuracy to the instrument (unless the problem is a RAM fault, in which case the instrument cannot SELF CAL), but the battery circuitry should be checked and the battery replaced if necessary. Also, the SELF CAL routine should be run again after the instrument is warmed up to generate accurate calibration constants at the operating temperature. If the power-off front-panel settings are lost for any reason, the power-on conditions that are set up are only restored in valid states (but not any predefined setup).

Address Decoder

The Address Decoders (U2517 and U2518) allow the Measurement Processor to enable any device on the busses for communication. Enabling signals $\overline{\text{BUS0 SEL}}$ and $\overline{\text{DAC SEL}}$ from the processor select the Address Decoder (either U2517 or U2518) that is actively decoding when the $\overline{\text{WR}}$ signal is low.

Backup Battery

To keep the data stored in the Measurement Processor RAM (U2521) during power off, a back-up battery system (BT2501, CR2502, and R2506) is used. The battery supplies the energy to maintain the memory states of the static RAM. The lithium battery is not rechargeable and has an operating life of over three years. When the instrument is on, CR2502 becomes reverse biased to prevent any reverse current; when off, CR2501 is reverse biased to isolate the back-up battery from the +5 V supply. If the battery requires replacement, observe the proper safety precautions in the handling and disposition of the replaced battery (see the WARNING under "Battery" in the Specification).

READOUT SYSTEM (Diagram 9)

Readout Processor

The Readout Processor (U2400) is an eight-bit microcomputer, containing its own internal ROM and RAM. The Readout Processor controls the display of text and cursors on the crt. It refreshes each character in the display every 16 ms. When the refresh rate becomes too high, refresh stops until the rate is low enough again. When the refresh rate becomes too low, refresh is done by taking control of the crt beam for a character at a time (Fast mode) until the refresh catches up. When the refresh rate is just right, refresh is done a dot at a time (Slow mode).

Each refreshed dot or character is refreshed with the appropriate display position attributes. The attributes define the characters or dots as:

Stationary text that stays put at a fixed point on screen (examples are scale factor and menu displays);

Cursor-level offset characters whose position is determined by the REF CURSOR or DELTA CURSOR control levels only (examples are the time-measurement cursors); or

Cursor-level and position-level offset characters whose display position is determined by both the cursor levels and the vertical position controls.

The Readout Processor also communicates with the Measurement Processor system to obtain its RAM programming (for determining the display types) and report its status.

Measurement/Readout Processor Communication Protocol

A data byte is transmitted between the Measurement Processor and Readout Processor as follows:

1. The Measurement Processor waits until $\overline{\text{RO INTR}}$ is unasserted (the Readout Processor is ready to receive).

manuals4you.com

2. The Measurement Processor writes a byte to tri-state Write Latch U2401 by strobing RO BUF WR; this asserts RO INTR (from Interrupt Latch U2417C and D) and causes an interrupt to the Readout Processor.

3. The Readout Processor, when interrupted, reads the Write Latch (U2401); it then unasserts RO INTR by clocking the Interrupt Latch to reset it. (This is the same clock used when the Readout Processor writes to tri-state Read Latch U2402.)

Communication from the Readout Processor to the Measurement Processor is done for diagnostics only and can be started only by the Measurement Processor. The Measurement Processor may check the communication link by comparing bytes sent to bytes received, query the Character Code RAM contents, and check the Character ROM identification header. The replies are all sent between the Readout Processor and Measurement Processor a byte at a time as follows.

1. The Readout Processor waits until RO INTR is asserted (the Measurement Processor is ready to receive).

2. The Readout Processor writes a byte to tri-state latch U2402; the clock that does the write also unasserts RO INTR.

3. The Measurement Processor waits until RO INTR is unasserted, then reads tri-state latch U2402. It then strobes RO BUF WR to assert RO INTR (if another byte is coming from the Measurement Processor).

Display Refreshing

READOUT FIELD. A Readout field is refreshed in this way:

1. The display field is selected by latching the top address bits for the field into U2411 (FLD2–FLD0).

2. The mixing attributes for the field are latched into U2411 (MIX3–MIX0).

3. The position-tracking attributes for the field are latched into U2403 (CH 4 POS EN through CH 1 POS EN and RO TRACE SEP EN).

4. The starting address for the field (set by communication with the Measurement Processor) is latched into counters U2404 and U2405 (CH7–CH0).

5. One character at a time, all the characters in the field are refreshed until the top address for the field (set by communication with the Measurement Processor) has been refreshed.

READOUT CHARACTER. A Readout character is refreshed in this way:

1. RO RUN is asserted. This tells the Dot Refresher PAL (U2410) to begin the character refresh and releases the reset on the Dot Counter (U2407) and the Dot Refresher divider (U2409B).

2. For each dot in the character, the next dot is refreshed.

3. When the final dot is refreshed, EOCH (end-of-character at U2408 pin 17) becomes asserted, and Q EOCH (the latched version) becomes asserted. The Readout Processor unasserts RO RUN, and increments the character address counter lines CH7–CH0.

READOUT DOT. A Readout dot is refreshed in this way:

1. RO REQ is unasserted (this causes RO HORIZ and RO VERT to control the crt horizontal and vertical) briefly to show the dot.

2. RO BLANK is unasserted then asserted (this unblanks then blanks the crt beam).

3. DOT CLK is asserted and unasserted (this increments the dot counter lines DOT4–DOT0).

FAST REFRESH. Fast refresh occurs when the Processor asserts FAST (whenever the refresh rate is too low) or when A GATE is unasserted (the sweep is in holdoff). In this mode, RO REQ is asserted at the start of a character, and unasserted at the end. Whenever RO REQ is asserted, the Readout system controls the crt beam intensity and the vertical and horizontal position of the beam. Dots are refreshed every 1.6 µs during fast refresh.

SLOW REFRESH. Slow refresh occurs when the Processor unasserts FAST (when the refresh rate is not falling behind in refreshing the readout) and A GATE is asserted. In this mode, RO REQ is asserted before each dot in a character, and unasserted after each dot.

http://www.tebaman.com

Data flow for the dots in a character is roughly this:

1. FLD2–FLD0 give the current field being refreshed.

2. CH7–CH0 give the position of the character within that field. CH7–CH5 gives the row within the Readout (row 0 at the bottom, and 7 at the top), and CH4–CH0 gives the column (column 0 at the left, column 1f hex at the right).

3. Given the field and character position, the RAM (U2406) outputs the character code (the code for the character that is to be displayed at that position) on R7–R0.

4. DOT4–DOT0 gives the dot that is being refreshed within the character.

5. Given the character code and dot number, ROM U2408 outputs the position of the dot within the character. There are up to 31 dots in a character, in an array of 128 possible dot positions (16 vertical by 8 horizontal). DD6–DD3 gives the vertical position of the dot, and DD2–DD0 gives the horizontal position.

6. Given the row and column containing the character, and the vertical and horizontal position of the dot, U2412 generates the vertical analog current for the dot, and U2413 the horizontal analog current.

7. U2414 sets up the mixing for the vertical output signal (see Readout Position Mixer).

8. U2415 sets up the mixing for the horizontal output signal.

Interrupt Request Latch

When the Measurement Processor wants to write new display data to the Readout Processor or Character Codes RAM (U2406), it latches the new data into the Readout Write Latch (U2401) from the D0–D7 bus lines by issuing the $\overline{\text{RO BUF WR}}$ (readout buffer write) strobe to the Interrupt Request Latch (U2417). The output of U2417D (pin 11) is latched low and the Readout Processor is interrupted from its display processes ($\overline{\text{RO INTR}}$ goes low). The Readout Processor enables the Readout Write Latch and reads in the new data. When the character is received, the Readout Processor transfers the byte to the Character Code RAM and resets the Interrupt Request Latch (U2417D) to let $\overline{\text{RO INTR}}$ go high again.

Communication Latches

Communication from the Measurement Processor and the Readout Processor is done via the Readout Write Latch (U2401). The Readout Read Latch (U2402) is used only for diagnostics communication.

Character Position Address Counter

The starting address of a readout field to be displayed is loaded into the Character Position Address Counter (U2404 and U2405). The counter then sequences through the addresses of the characters loaded in Character Code RAM U2406. The vertical and horizontal position of the character being displayed is also defined by the output of the counter and is supplied to the Vertical and Horizontal DACS on the CH0–CH7 bus lines.

Character Codes RAM

The ASCII codes needed to display a field of readout are loaded into the Character Codes RAM (U2406) from the Measurement Processor via the Readout Writer Buffer (U2401) on the R0–R7 bus lines. When the field is displayed, the RAM is addressed in sequence by the Character Position Address Counter to output those codes for a display refresh. The field of codes accessed by the FLD0–FLD2 address lines defines either text (menus, measurement readouts, and error messages), vertical cursors, or horizontal cursors. Each field has space for up to 255 characters, and each field can be superimposed over the others on the crt. The difference between the horizontal and vertical cursors is a 90° rotation of the character field. Hexadecimal addresses for a field are shown in Figure 3–8.

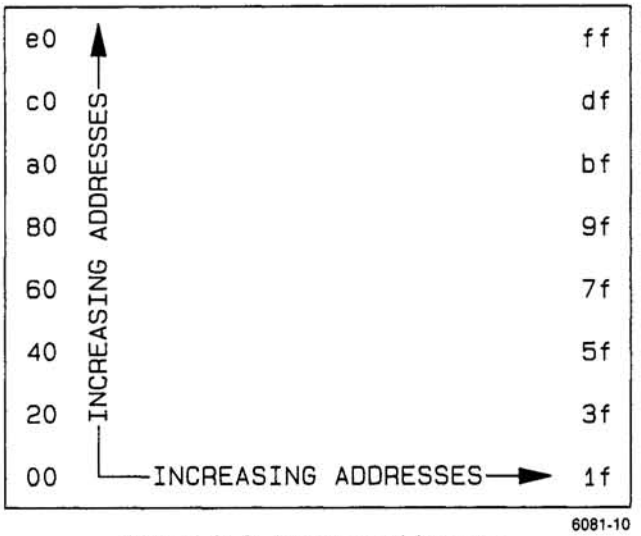

Figure 3–8. Display addresses.

Character Dot Counter

The Character Dot Counter (U2407A and B) is reset before the start of each character display. When $\overline{\text{RO RUN}}$ goes low (the start of a refresh cycle), the reset is released and the Dot Clock (active low) from the Dot Refresher (U2410) clocks the output of the counter through the number of counts needed to address all the dots in a character stored in the Character Dot Position ROM (U2408).

Character Dot Position ROM

The dot sequence and dot position to display each character is stored in the Character Dot Position ROM (U2408). Character addressing for the display is provided by the Character Codes RAM (U2406) on the R0–R6 bus lines. Addressing of the individual dots within a character is provided from the Character Dot Counter (U2407A and U2407B) on the DOT0–DOT4 signal lines. The pixel information output by the Character Dot Position ROM defines the vertical and horizontal position of the dot to be displayed. At the end of a character display, the $\overline{\text{EOCH}}$ signal is generated from U2408 pin 17 to the Dot Refresher (U2410) to let that device know that the character is finished and the next character can be started.

Dot Refresher

Dot Refresher U2410 is a programmable-AND, fixed-OR logic (PAL) device. It monitors $\overline{\text{RO RUN}}$ for its low states to determine when a refresh cycle starts. It then assert $\overline{\text{RO REQ}}$ to take control of the display for refreshing the displayed character dots. $\overline{\text{RO BLANK}}$ goes high then low again for each displayed dot. The Dot Clock signal then goes low and high again to clock the Character Dot Counter (U2407A and U2407B) to the address of the next dot in the character being refreshed. In Fast mode (when there is low demand for display time or the refresh rate is getting too slow), each character is completely refreshed. In Slow mode, the dots are refreshed at the rate of only one dot per each readout request.

When all the dots in a character have been refreshed, the $\overline{\text{EOCH}}$ (end-of-character) signal from Character Dot Position ROM U2408 tells U2410 that there are no more pixels to be refreshed in that character. $\overline{\text{RO REQ}}$ is then unasserted to release control of the display system and $\overline{\text{Q EOCH}}$ (U2410, pin 18) is sent to the Readout Processor to tell it that the Dot Refresher is finished with the character.

The Dot Refresher also asserts the $\overline{\text{POS EN}}$ signal low (pin 19) when readout associated with any of the traces is being displayed. That signal enables the Readout Position Enable Latch (U2403).

Divider/Counter

The 8 MHz System Clock is divided down to 4 MHz by Divider/Counter U2409A for clocking the Readout Processor and to 2 MHz to clock the Dot Refresher (after inversion by U2417B). The 2 MHz signal also clocks U2409B, a second divider that produces the signals that cycle the Dot Refresher through its internal states.

Readout Position Enable Latch

When the readouts must follow the Channel Vertical POSITION controls or the TRACE SEP control, the vertical position information must be added to the readout position. This job is done in the Vertical Position Switching circuitry (Diagram 2). The time of enabling and the readout position that is enabled is determined by the Readout Processor. The correct enabling data for the next field of characters to be displayed is latched into U2403 from the R0–R7 (bits 0–4 only) bus by the $\overline{\text{POS STB}}$ signal (U2403, pin 11). See Table 3–27. When a field is being refreshed, the outputs of U2403 are enabled by the $\overline{\text{POS EN}}$ signal from the Dot Refresher, U2410 pin 19.

http://www.ebamanuals.com

Table 3–27
Position Enable Bit Assignment

b4	b3	b2	b1	b0	Value
x	x	x	x	0	Disable CH 1 position current
x	x	x	x	1	Enable CH 1 position current
x	x	x	0	x	Disable CH 2 position current
x	x	x	1	x	Enable CH 2 position current
x	x	0	x	x	Disable CH 3 position current
x	x	1	x	x	Enable CH 3 position current
x	0	x	x	x	Disable CH 4 position current
x	1	x	x	x	Enable CH 4 position current
0	x	x	x	x	Disable Trace Sep current
1	x	x	x	x	Enable Trace Sep current

Readout DACs

Vertical Character and Dot position data bytes are converted to analog current for eventual application to the Vertical Delay Line by Vertical Readout DAC U2412. The vertical signal current is applied to both signal mixer multiplexers (U2414 and U2415). When fixed position text is displayed, the output mixer selects a fixed position value to mix with the horizontal output signal to define the readout position on the display. When positionable text is displayed (such as time cursors), the cursor position signal is mixed with the horizontal output signal. That summed signal then defines (vertically) where a character (dot) is displayed on the crt. Vertical Readout that follows the Channel Vertical POSITION controls (tracking cursors and associated text) has summed its position information in the Vertical Position Switching circuitry (Diagram 2).

Horizontal Character and Dot position data bytes are converted to analog current for application to the Horizontal Preamplifier (U802, Diagram 6) by Horizontal Readout DAC U2413. The horizontal signal current is applied to both signal mixer multiplexers (U2414 and U2415). When fixed position text is displayed, the output mixer selects a fixed position value to mix with the horizontal output signal to define the readout position on the display. When positionable characters are displayed (such as time cursors), the cursor position signal is mixed with the horizontal character position signal. That summed signal then defines (horizontally) where a character dot is displayed on the crt. None of the readout (text or cursors) is positionable using the Horizontal POSITION control.

Field and Mixer Control Latch

Selection signals for switching the Readout Position Mixer multiplexers (U2414 and U2415) are latched into Field and Mixer Control Latch U2411 by the MIX STB output from the Readout Processor (U2400 pin 25). Three field selection bits used in addressing the Character Code RAM are also loaded from the data byte output from U2400 on the R0–R7 data bus. The MIX3–MIX0 bits select the combination of fixed, positionable, and character (dots) signals that are mixed to produce the required readout positions on the crt.

The Field signals (FLD0, FLD1, and FLD2) access the type of characters that are displayed (menus and readout labels, vertical cursors, or horizontal cursors). Each of the three fields contains space for 255 characters. Characters from each field are superimposable over the other field's characters in the display. The attributes implicitly affect the field specified by b0, b1, and b2 (b2 is always handled as if zero, even if not communicated as zero).

Readout Position Mixers

The Readout Position Mixer (U2414, U2415) selects either fixed or cursor-position voltages to mix with the character signals to position them in the display. Selection is done by the MIX0–MIX3 signal levels set up by the Measurement Processor for the particular field of characters being displayed (see Table 3-28).

http://www.obaman.com

Table 3-28

Field and Mixer Attribute Bit Assignment

MIX3	MIX2	MIX1	MIX0	NC	FLD2	FLD1	FLD0	Value
x	x	x	x	x	b2	b1	b0	Field number (0,1, or 2)
x	x	0	0	x	x	x	x	Route Horiz DAC to Horiz Ampl
x	x	0	1	x	x	x	x	Route Cursor0 to Horiz Amplifier
x	x	1	0	x	x	x	x	Route Cursor1 to Horiz Amplifier
x	x	1	1	x	x	x	x	Unassigned
0	0	x	x	x	x	x	x	Route Vert DAC to Vert Ampl
0	1	x	x	x	x	x	x	Route Vert DAC + Cursor0 to Vert Amplifier
1	0	x	x	x	x	x	x	Route Vert DAC + Cursor1 to Vert Amplifier
1	0	x	x	x	x	x	x	Route Horiz DAC to Vert Ampl

The 2245A Readout Output Mixer allows three modes of display to present the text and vertical or horizontal cursors.

TEXT OUTPUT MODE. The vertical output displays vertical text information, locked to crt vertical screen position. The horizontal output displays horizontal text information, locked to crt horizontal screen position.

HORIZONTAL CURSOR MODE. The vertical output displays vertical text information, whose position is controlled by an analog cursor level control. The horizontal output displays horizontal text information, locked to crt horizontal screen position.

VERTICAL CURSOR MODE. The vertical output provides a ramp signal, locked to crt vertical screen position. The horizontal output matches the voltage of an analog cursor level control.

MIXER OPERATION. The readout system displays text in a pixel-type representation. For example, an underlined letter "A" may be represented as in Figure 3-9. Blackened spaces in the illustration denote a displayed pixel.

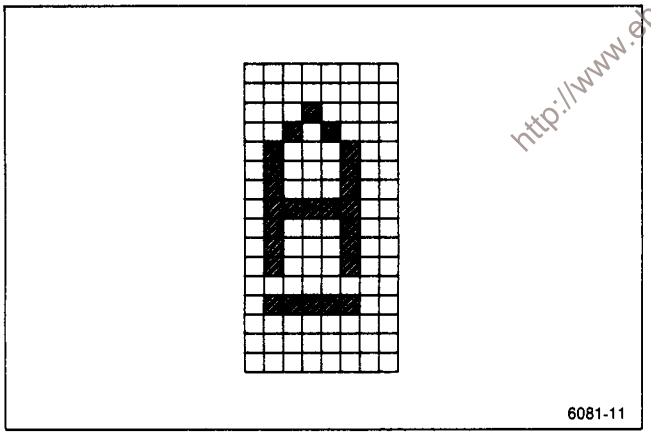

Figure 3-9. Character pixel arrangement.

For each character, one pixel at a time is displayed by driving the vertical and horizontal outputs to values representing the vertical and horizontal position of a pixel within a character and then unblanking the Z-Axis.

Multiplexers U2414 and U2415 are ganged electronic switches that mix current and voltage settings. Vertical Readout DAC U2412 (vertical text generator) provides an output current from pin 2 that is proportionate to the vertical position of the pixel being displayed; the minimum output is 0 mA. Horizontal Readout DAC U2413 (horizontal text generator) provides an output current that is proportionate to the horizontal position of the pixel being displayed. Its minimum output is also 0 mA. The REF CURSOR and DELTA CURSOR levels are voltages that offset the text output for the type of cursor being displayed (vertical TIME cursors or horizontal VOLTS cursors). When straight text is to be displayed, dc levels for offsetting the vertical and horizontal text display outputs are added. Horizontal and vertical signals to be mixed for a particular readout are selected by the MIX0-3 outputs of latch U2411. The data is latched from the Readout Processor bus when $\overline{\text{MIX STB}}$ clock is generated by the Readout Processor.

Output Buffers

The Output Buffers (U2416A and U2416D—vertical, and U2416B and U2416C—horizontal) are voltage follower circuits that mix the signals selected by the Readout Position Multiplexers and buffer them for application to the vertical delay line (RO VERT) and the Horizontal Preamplifier (RO HORIZ).

http://www.ebamanuals.com

The voltage at U2416 pin 14 depends on two things: the current from U2414 pin 13, and the voltage at U2414 pin 3. The possible displays are given in Table 3-29.

The voltage at U2416 pin 8 depends on two things: the current from U2415 pin 13, and the voltage at U2415 pin 3. The possible conditions are shown is Table 3-30.

SWITCH BOARD AND INTERFACE (Diagram 10)

The front-panel LEDs that backlight the switches and panel labels are schematically arranged in a matrix of eight rows and six columns. The front-panel switches are arranged in a matrix of 16 rows and six columns. Each LED and switch is connected to a distinct row/column intersection, with a column of LEDs and a column of switches being common and enabled by the same signal.

At intervals of about 2 ms, a column of LEDs is refreshed (turned on or off) and the status (open or closed) of the connected column of switches is read. All six columns of LEDs and the six columns of switches are completely refreshed and checked every 12 ms. The timing is fast enough to prevent flicker of the LEDs and to catch a push-button closure.

Table 3-29

Display Possibilities

Readout Type	U2414-3	U2414-13
Stationary Text	0.6 V	U2412 output
Horizontal Ref Cursor	REF CURSOR	U2412 output
Horizontal Delta Cursor	DELTA CURSOR	U2412 output
Vertical Ref Cursor	0.6 V	U2413 output
Vertical Delta Cursor	0.6 V	U2413 output

Table 3-30

Possible Signal Conditions to U2416

Readout Type	U2415-3	U2415-13
Stationary Text	2.0 V	U2413 output
Horizontal Ref Cursor	2.0 V	U2413 output
Horizontal Delta Cursor	2.0 V	U2413 output
Vertical Ref Cursor	REF CURSOR	0 mA
Vertical Delta Cursor	DELTA CURSOR	0 mA

http://www.obaman.com

LED Refresh

Assume LED column AS0 is being refreshed. First, the LED Cathode Register, U2524, is loaded with a data byte from the Measurement Processor. That byte defines the LEDs that are on for that column, and the outputs of Cathode Driver U2525 for the "on" LEDs are low. Then, a high on the D0 bit of the Measurement Processor Data Bus is latched into LED Anode Register U2523 with the $\overline{\text{LED ANODE CLK}}$ signal. That high turns on the associated Darlington transistor (Q2506 for the AS0 column), and the LEDs in that column that also have their cathodes low from U2525 are turned on.

Switch Reading

At the same time the AS0 LED column is refreshed, the connected AS0 switch column is pulled high through CR2006. The switch status (low for open or high for closed) for the active switch column is parallel loaded into the Switch Board Shift Registers (U2001 and U2002). This switch status data is then shifted out serially (by 15 $\overline{\text{SW BD SR SHIFT}}$ clocks) to the Measurement Processor on the SW BD DATA return line. The position of a high in the serial data stream, and knowing the active column, tells the Measurement Processor the switch in column AS0 that is closed (the CH 1 VOLTS/DIV setting). Columns with push-button switches may or may not have a switch closed. A switch closure is interpreted by the Measurement Processor, and any new operating conditions needed (determined from the firmware routines called up to handle a particular switch closure) are set up.

At the next 2 ms interrupt, the Measurement Processor loads new data into Cathode Register U2524 to enable the LED rows, and the column is advanced to enable the A01 column for refresh and switch reading. The process described is continual while the oscilloscope is on.

Part of the Measurement Processor routine stores the new front-panel settings in the System RAM each time a change is made. At power on (after being turned off), the stored front-panel settings are recalled from the System RAM to return the oscilloscope to the same operating state that existed at power off (with some exceptions).

Diagnostic

When the Measurement Processor is running the register checks during the DIAGNOSTIC, it can check the condition of registers U2001 and U2002. Serial data is placed on the AS0 line from the D0 bit of the Measurement Processor data bus. That data is serially shifted through the two registers to the SW BD DATA return line. The Measurement Processor compares the returned data stream with what was sent. A difference in the data bits shows an error; a correct comparison passes the test.

ADC AND DAC SYSTEM (Diagram 11)

The ADC and DAC System permits the Measurement Processor to provide analog control voltages to the circuitry under its control and to find out certain analog voltage levels that it must have to do its control and measurement functions.

http://www.tobaman.com

Pot Multiplexer Latch

Latch U2313 latches data from the data bus (D0-D7) to control multiplexers U2308 and U2309 on this diagram and U506 on Diagram 7.

Front-Panel Control Multiplexers

Multiplexers U2308 and U2309, controlled by the Measurement Processor via Pot Mux Latch U2313, select the front-panel control levels that are compared with the output of the D-to-A Converter (U2302). The result of that comparison is sent via signal line AD COMP to the Measurement Processor (U2501, Diagram 8).

Input Data Latches

Binary data bytes to be converted to analog voltages are loaded into two latches (U2300 and U2301). Data Latch U2301 latches data to the DAC Multiplexer U2303 and U2302. Data Latch U2300 latches data to D-to-A Converter U2302.

Digital-to-Analog Converter

The D-to-A Converter (U2302), using 12 data bits, can produce 4096 discrete output signal current levels from 0 to 2 mA. Signal current flows through R2303 to the +2.5 V reference voltage. The resulting voltage drop across the resistor moves the voltage at pin 3 of voltage follower U2314 away from +2.5 V toward 0 V and below. When there is 0 mA output, the voltage at pin 3 is +2.5 V. At maximum output current, the voltage at pin 3 is -2.5 V. Voltage follower U2314 buffers the voltage and applies it to the input pin of analog multiplexer U2303, where it is directed to the control circuit selected by the Measurement Processsor.

A-TO-D CONVERSION. The output from U2314 is also applied to comparator U2306. When analog-to-digital conversion is being done, the Measurement Processor drives the DAC to produce comparison voltage levels in a binary search pattern. The output of U2306 is monitored to determine the smallest DAC input change that will produce an output change from the comparator. That value is then used as the digital representation of the analog voltage applied to the other pin of the comparator from the output of Multiplexer U2308 or U2309. Signals on that multiplexed line are the front-panel-potentiometers wiper voltages and the probe-code levels.

Sample-and-Hold Circuits

The analog voltages from the multiplexer U2303 remain stable only for the short period of time that the DAC is at a fixed output level. Control voltages to the analog circuitry must remain constant except for changes to the control settings. Those control voltages are held constant between refreshes by sample-and-hold circuits formed by a capacitor (to hold the voltage) and a voltage follower (to buffer the voltage held by capacitor). The voltage follower circuits are provided by the operational amplifiers of U2304 and U2305. Each of the hold voltages are protected from humidity degradation of the voltage follower's high-impedance input by an active guard shield on the circuit board. Extra noise filtering for two of the control voltages (REF DELAY and DELTA DELAY) is provided by using an RC pi-type filter input circuit to the voltage follower.

Analog Control Auto Setup

The auto-setup circuitry presets many of the analog front-panel controls to predetermined settings. Pressing the AUTO SETUP button starts the setup function. Auto-ranging on the signal is part of the setup procedure not discussed here. However, as part of that setup procedure, the settings of TRACE SEP, CH 1 - CH 4 POSITION, READOUT, and A and

B INTEN are set to levels that provide a good starting point for making measurement setups. Those settings remain at the SNAP setting level until the front-panel potentiometer setting crosses the preset SNAP level. After that level is crossed, control is returned to the front-panel potentiometer.

When AUTO SETUP is pressed, the Measurement Processor loads the SNAP0 - SNAP7 data bits into the SNAP latch, U2307, on the rising edge of SNAP CLK at pin 11. The latch is permanently enabled by the ground on pin 1, the enable input. The SNAP bits switch multiplexors U2311, U2310, and U2312 to apply fixed analog levels to the front-panel control output lines at J2304. The fixed control values remain switched in until the microprocessor determines the movement of a front-panel control has crossed the SNAP control level. At that time, the Measurement Processor resets the SNAP bit level to switch the multiplexor to return control to the front-panel potentiometer. SNAP bits for the unchanged controls remain set to levels that hold the fixed voltages on the control lines.

POWER SUPPLY (Diagram 12)

The Power Supply (Diagram 12) provides the various low-voltages needed to operate the 2245A and the high-voltage required by the cathode-ray tube (crt). The supply circuitry is arranged in the following functional blocks: AC Input, Primary Power Rectifier, Start-Up circuit, Preregulator Control circuit, Preregulator Power Switching circuit, Inverter Control circuit, Inverter Power Switching circuit, Low-Voltage Secondary Supplies, and High-Voltage Supply (see Figure 3-10).

Ac power via the power cord is rectified and filtered by the Primary Power Rectifier to supply the dc voltage to Preregulator circuitry. The output voltage level from the Primary Power Rectifier depends on the ac supply voltage level and may vary between about 125 V and 350 V. This unregulated, filtered, dc voltage is supplied to the Preregulator Start-Up circuit and the Preregulator Switching circuit. The Preregulator Power Switching circuit supplies +44 Vdc output power to drive the Inverter Power Switching circuit.

The +44 V Preregulator output voltage is switched by the Inverter Power Switching circuit to produce an alternating current through the primary of the Inverter power transformer. The current source to the Inverter switching transistors is monitored and regulated by the Inverter Control circuit to maintain a constant output voltage level across the transformer secondaries.

The Low-Voltage Secondary Supplies rectify and filter the low-voltage secondary ac voltages to provide the dc power requirements for the instrument. Two other secondary windings on the Inverter Power Transformer are used in the High-Voltage Supply, a high-voltage winding and a crt filament winding. Voltage from the high-voltage winding is further multiplied and converted to dc voltage for the crt anode, cathode, and intensity-grid voltages.

Both overvoltage and overcurrent protection are provided to protect the oscilloscope circuitry from further damage if a circuit component fails.

Ac Input

Applied source voltage is input to the Primary Power Rectifier via surge protection circuitry and noise filtering circuitry. A sealed line filter (FL2201), L2207, L2208, C2214, C2213, C2216, C2215, R2260, R2227, and R2228 form a low-pass filter designed to prevent transmission of high-frequency noise signals either into or out of the instrument. Bleeder resistor R2215 across the input line filter drains off any charge retained by the capacitors in the input circuitry when the power is disconnected. Thermistor RT2201 prevents a sudden rush of input current into the rectifier and filter capacitor, C2202, when the power switch is turned on. The thermistor presents a relatively high resistance when cold, then quickly reduces to a low value when warmed up. Varistor VR2204 acts as a surge limiter to reduce the effects of any power line surges that may damage the input circuit components. The varistor is a voltage-sensitive device that quickly reduces its resistance value when its voltage limits are exceeded. Line fuse F2201 protects the instrument from additional damage in case of of a severe short in the power supply.

Primary Power Rectifier

Rectification of the input ac source voltage is done by bridge rectifier CR2233. Simple capacitive filtering of the rectifier output is done by C2202. The filtered output voltage may range between about 125 Vdc and 350 Vdc, depending on the amplitude of the ac input voltage. A line trigger signal is picked off by T2206 for use when the Trigger SOURCE is set to LINE. Bleeder resistor R2256 drains off the charge on C2202 when the instrument is turned off.

http://www.tobaman.com

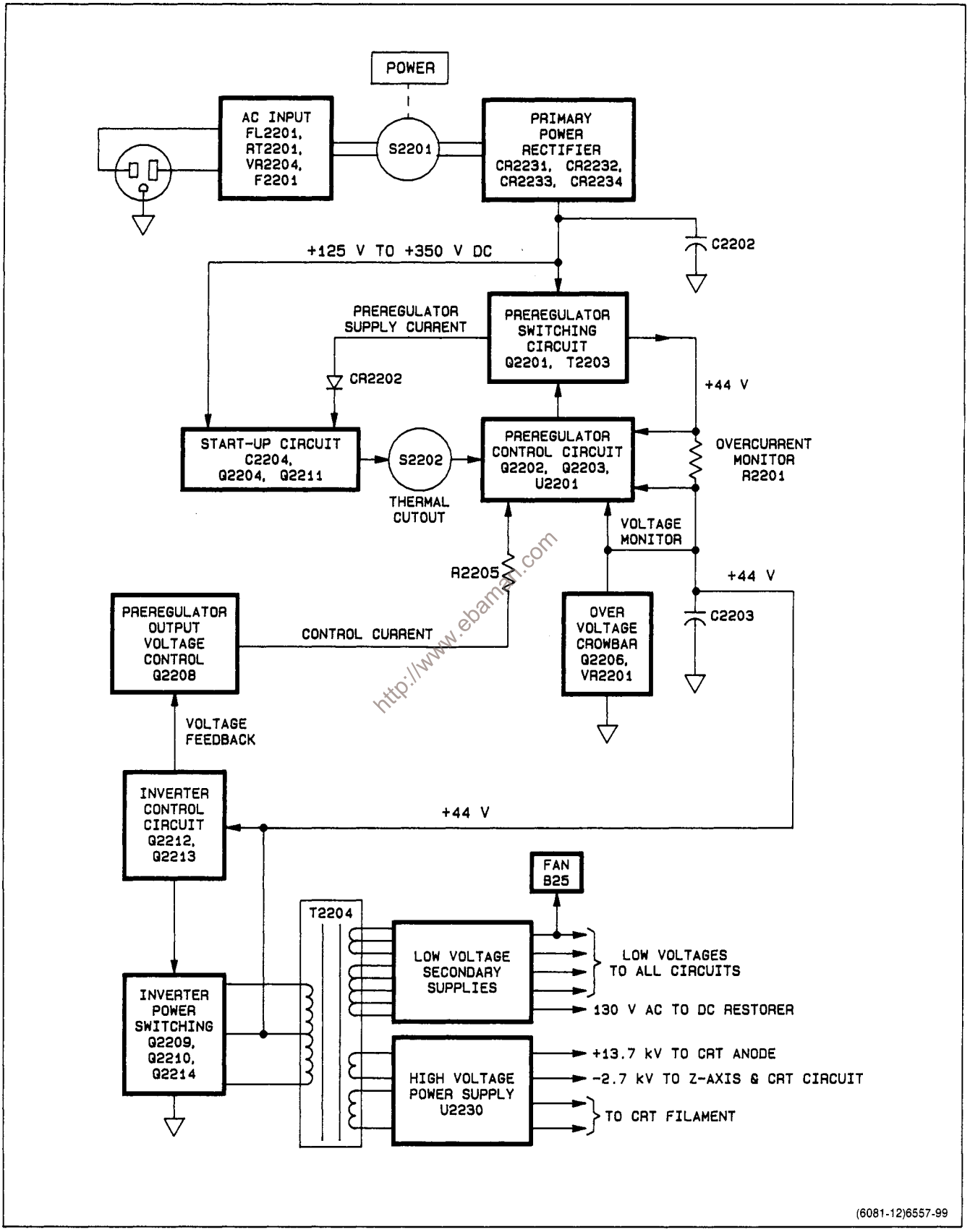

Figure 3-10. Power Supply block diagram.

Start-Up Circuit

The Start-Up circuit provides the operating supply voltage to the Preregulator. At power on, C2204 in the Start-Up circuit begins charging through R2203 and R2204 from the output of the Primary Power Rectifier. When the voltage across C2204 reaches 20 V, the voltage at the base of Q2204 is about 6.8 V. This base voltage level causes Q2204 to conduct (there is a 6.2 V zener diode in the emitter path), and Q2211 also is then biased on. Positive feedback to the base of Q2204 (from the collector of Q2211 through R2220) then keeps both transistors on. The dc voltage to U2201 (Vcc) for start up (and continued running after start up) is provided by the charge on C2204 via Q2211.

With U2201 on and drawing current from C2204, the voltage across C2204 begins to fall. If the Preregulator output rises to +44 V before the voltage across C2204 falls to 10 V, then CR2202 becomes forward biased, and current pulses are supplied by a winding (pins 8 and 9) on T2203 to keep C2204 charged (and U2201 operating).

If the Preregulator output does not rise to +44 V within the time it takes to discharge C2204 below 10 V (about 1/10 of a second), the voltage at the base of Q2204 will drop too low for the feedback voltage to keep it on. That will cause Q2211 to also shut off. The start-up cycle repeats when the voltage across C2204 again reaches 20 V (recharging from the output of the Primary Power Rectifier output via R2203 and R2204). Continued failure of the Preregulator to start up and the repeated attempts to do so is called the "Chirp" mode. Zener diode VR2206 prevents the voltage across C2204 from exceeding about 30 V if no start-up attempt occurs.

Preregulator Control Circuit

The Preregulator Control IC, U2201, is a pulse-width modulator used to control the on time of Preregulator Switching FET Q2201. It contains an oscillator, comparators, voltage and current error amplifiers, and logic circuitry that controls its operation. The modulated output pulses drive switching transistor Q2201 through a buffer amplifier composed of Q2202 and Q2203. Pulse width (the time that FET Q2201 is on) is inversely proportional to the control voltage at pin 3 of U2201 (i.e., a lower voltage at pin 3 makes the pulse width wider to keep Q2201 on longer.

Pin 7 of U2201 is the IC ground reference, and it is tied directly to the +44 V output voltage. Therefore, the Preregulator IC and the Start-Up circuitry operating potentials "float" on the regulated output voltage (developed across C2203).

Pin 2 of U2201 is the current-summing node to the voltage-error amplifier. The error amplifier will try to keep the voltage on pin 2 equal to the voltage on pin 1 (the +44 V supply voltage). The error amplifier maintains pin 2 at +44 V by raising (or lowering as necessary) the voltage at pin 3. This raises (or lowers) the voltage across C2203 so that less (or more) current will be drawn out of the current-summing node.

The major current injected into the summing node is from the regulated 5 V output, from pin 12 of U2201, via R2212. That current is about 0.6 mA. The current through R2206 adds to the current shunted by the Preregulator Output Voltage Control transistor, Q2208, to produce about 0.6 mA to keep the current into and out of the summing node balanced. The actual current through R2206 is the output voltage (+44 V across C2203) divided by the resistance value of R2206 (100 kΩ) or about 0.4 mA.

SOFT START. At the initial turn-on of the instrument, C2203 is discharged. If no action were taken to prevent it, the initial charging current to that capacitor would exceed safe limits. To avoid such a problem, a "soft start" of the charging path is done.

http://www.tbaman.com

At turn-on, the +5 V output of U2201 steps to +5 V immediately. A +5 V pulse is coupled to pin 4 of U2201 via C2207. This pin is the "dead time control" input, and when it is high, the dead time between switching pulses to Q2201 is increased to 100%. Switching transistor Q2201 does not turn on, and no charging of C2203 occurs. Then, as C2207 charges, the voltage on pin 4 begins to decrease toward the ground reference value (on pin 7). This decreases the dead time, allowing increasingly wider conduction pulses to occur.

The on-time gradually increases until the charging current is limited by the internal current limit amplifier of U2201. At that point, the Preregulator is acting as a current source. When the voltage across C2203 reaches +44 V, the voltage error amplifier starts to limit the output, and the Preregulator has reached its operating level and acts as a voltage source.

CURRENT LIMIT. The output current of the Preregulator switching FET, Q2201, is limited to a safe value. If the current exceeds 2.4 amperes, the voltage dropped across R2201 causes pin 14 of U2201 (one input of the current limit amplifier) to exceed the voltage on pin 13 of U2201 (the other input pin of the current limit amplifier). The output of the current limit amplifier then goes high, raising the voltage on pin 3 of U2201. Increased voltage on

pin 3 narrows the width of the turn-on pulses to switching FET Q2201 and limits the output current.

Usually, with a circuit failure, the excess loading remains, and the pulses remain narrow. The Preregulator Control IC then shuts down because the charge on C2204 is not maintained via the Preregulator supply winding on T2203, and the Preregulator goes into the chirp mode (continual shut down and restart attempts).

OVERVOLTAGE CROWBAR. If the output voltage across C2203 exceeds about +51 V, VR2201 in the crowbar circuit conducts. The gate of SCR Q2206 then rises; and, if the rise is enough, the SCR latches on. When on, Q2206 shorts out C2203, and the current limit circuit causes the switching pulses to Q2201 to become very narrow. Preregulator IC U2201 then shuts down (as described in the Current Limit discussion). The Preregulator will attempt a restart after about half a second, but will shut down again if the overvoltage condition continues (this is the "chirp" mode).

PREREGULATOR OUTPUT CONTROL. The voltage across the Inverter current source transistor, FET Q2214, is monitored by Q2208 (from the collector voltage of either Q2209 or Q2210). That voltage has to be maintained at the proper level to provide enough regulation room for the secondary supply voltages and still not dissipate more power than necessary in Q2214. If the voltage across Q2214 is too high, Q2209 is biased on harder and draws more current from the input summing node (pin 2 of U2201) of the voltage error amplifier in U2201, the Preregulator Control IC. The output of the error amplifier at pin 3 of U2201 then rises, and the width of the switching pulse to the Preregulator Switching circuit narrows to decrease the +44 V output.

The Inverter Control circuit (Q2212 and Q2213) senses the decreased voltage across the primary of the Inverter power transformer (T2204) and responds by driving Q2214, the Inverter current-source transistor, harder; thereby decreasing the voltage across it.

Control response time in the feedback loop just described is long; but it does not need a fast response time, since the circuit only determines the power dissipation in Q2214. Compensation of the circuit to prevent oscillation is done by a low-pass filter (10 Hz cutoff) formed by C2238, R2205, and R2246.

Preregulator Switching Circuit

The Preregulator Switching circuit provides the energy required to keep C2203 charged up to +44 V. Switching FET Q2201 is driven by the pulse-width modulated output of the Preregulator IC (U2201) via a buffer amplifier circuit. The Preregulator IC controls the on-time to maintain the voltage across C2203 at +44 V.

For the following discussion of the switching circuit, assume that Q2201 is off, C2201 is charged to the rectified line voltage (160 V from the Primary Power Rectifier), and the +44 V supply is up and driving a circuit load.

When the Preregulator IC turns on Q2201, the drain of Q2201 is immediately clamped to 44 V. This forces 116 V (160 V – 44 V) across pins 6 and 7 of T2203. Current begins increasing linearly in that coil as Q2201 supplies current to the +44 V supply. With the one end of C2201 clamped to +44 V, and C2201 being charged to +160 V, the other end of C2201 is pushed down with the anode of CR2201 going to –116 V (44 V – 160 V). This places 116 V (0 – 116 V) across pins 1 and 2 of T2203 and current begins increasing linearly in that coil, also flowing through Q2201 to the +44 V supply. After a time determined by Preregulator IC U2201, the drive signal to Q2201 is switched low, and the switching FET is turned off.

http://www.tboman.com

The current flowing in both coils of T2203 must continue as the magnetic field collapses, but it cannot flow through Q2201. The only available path is through CR2201 (previously biased off). The polarity reversal of the voltage across T2203 that occurs forward biases CR2201, and permits the energy in the magnetic field to be released to the +44 V supply.

When CR2201 is forward biased its cathode is clamped to the +44 V supply level. With C2201 still charged to +160 V (the supply voltage), its positive end is pushed up to 204 V (44 V + 160 V). Now there is –44 V (160 V – 204 V) across the coil of T2203 from pin 7 to pin 6 and –44 V (0 – 44 V) from pin 2 to pin 1 (see Figure 3-11). Since C2201 is in parallel with C2202 for dc voltages (coils are shorts to dc), the dc voltage across C2201 can change very little. The capacitance of C2201 is large enough that the charging and discharging currents do not have enough time to change the voltage across C2201 in normal operation.

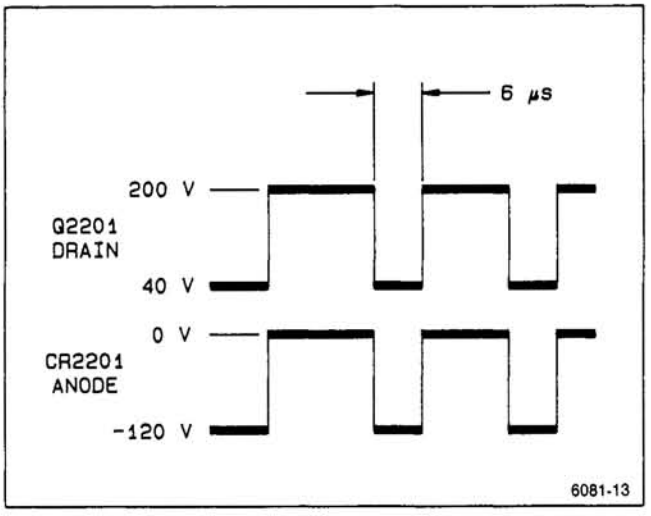

Figure 3-11. Preregulator switching waveforms.

The two coils of T2203 need not be coupled magnetically for the circuit to operate. Both coils are wound on the same core for convenience. Transformer action is minimal because the waveforms impressed across both coils are nearly identical.

After a time controlled by the Preregulator IC (the dead time), the on-time cycle for Q2201 repeats. On-time depends on the line voltage level; a higher line voltage level means a shorter on-time of Q2201 is needed to maintain +44 V across C2203.

http://www.tobamanuals

Inverter Power Switching Circuit

The Inverter Power Switching circuit is composed of switching transistors Q2209 and Q2210, current source transistor Q2214, inverter power transformer T2204, base-drive transformer T2205, and associated components. Current supplied by the +44 volts output from the Preregulator circuit is alternately switched through each side of the center-tapped primary of T2204 to drive the loads on the secondary windings of the inverter transformer.

INVERTER STARTER. As the Preregulator turns on, the +44 V supply increases from 0 V. The increasing voltage forward biases CR2236 and charges C2248 through the base-emitter junctions of Q2209 and Q2210. Current is drawn through each side of T2204, from the center tap, as the transistors conduct. One of the two transistors will have a slightly higher gain than the other, and its collector voltage will decrease more than the other. The voltage difference across the primary of T2204 also appears across the primary winding of T2205, and a feedback voltage is induced in the secondary winding of T2204. The polarity of the transformer is such that the conduction of the higher gain transistor is reinforced (positive feedback), and that transistor quickly saturates while the other is cut off. One end of the primary of T2204 is driven toward ground while the other end is opened. After about half a second, C2248 charges up, CR2236 becomes reverse biased, and that path for current through the conducting transistor is blocked.

If the Inverter Power Switching circuit stops, the Inverter Starter circuit will not restart it until C2248 is discharged. Furthermore, C2248 will not discharge until the +44 V supply falls.

INVERTER POWER SWITCHING. Switching is started by one or the other of either Q2209 or Q2210 conducting more that the other, and circuit action biases the other one off. Assume for this discussion that Q2210 is biased on and Q2214 is off. Current flows through current-source FET Q2214, on-transistor Q2210, and half of the primary of T2204 (pins 9 and 11). The voltage drop across current-source transistor Q2214 holds the emitter voltage of Q2209 and Q2210 at 3 V. Voltage across pins 9 and 11 is therefore 41 V (44 V - 3 V).

Through autotransformer action, 41 V is induced in the other half of the primary winding of T2204 from pin 8 to the center-tap pin. That voltage adds to the 41 V from pins 9 to 11 to produce a potential of 82 volts across the primary of switching transformer T2205. Current rapidly ramps up through the primary of T2205 and induces a positive feedback base current in one-half of its center-tapped secondary that keeps Q2210 turned on. Current in the other half of the secondary biases on CR2227 to prevent a high reverse base-to-emitter voltage from being developed across Q2209.

After about 25 µs, the current through the primary of T2205 saturates the magnetic core and the primary impedance of the transformer drops to a low value. When saturation occurs, the impedance presented by L2206 by comparison to that of T2205 is large, and most of the voltage applied from the secondary of T2204 is then dropped across L2206. The secondary voltage of T2205 drops to zero, and with no base-drive current to Q2210, that transistor switches off.

With both Q2209 and Q2210 off, the magnetic energy stored in the primary of T2205 and in L2206 causes current to flow in the primary of T2204, reversing the voltage polarity on this winding. The voltage reversal is not instantaneous because of the parasitic capacitance of the T2204 windings. When the reverse voltage gets high enough, base current flows to Q2204 and that transistor turns on. The inverter current flow cycle through T2204 then repeats but in the opposite direction to induce ac

current in the various secondary windings of the inverter power transformer.

INVERTER CONTROL LOOP. Whenever either Q2209 or Q2210 is on, the collector voltage of the on transistor forward biases either CR2205 (if Q2209 is on) or CR2204 (if Q2210 is on). Capacitor C2219 is then charged to nearly the same voltage that is applied to the center tap of the primary winding of Inverter Transformer T2204.

A resistive voltage divider formed by R2239, R2238, and potentiometer R2252 (+7.5 V ADJUST) applies a fraction of the voltage across C2219 to the base of Q2213 (one-half of a differential amplifier formed by Q2212 and Q2213). The voltage on the base of Q2213 is compared to a voltage on the base of Q2212 that is referenced back to the +44 V center tap voltage of T2204. If the collector voltage of the conducting inverter-switching transistor (Q2009 or Q2210) is not the correct level (about 3 V), the gate voltage of current-source FET Q2214 will be raised or lowered as needed to correct the error.

Low-Voltage Secondary Supplies

The low-voltage power supply circuitry on the pin 12 to pin 22 and pin 13 to pin 15 secondary windings of the Inverter power transformer consist of rectifier and filter components only. All the regulation is done by the Preregulator and Inverter Control circuitry in the primary side of the transformer. Both half-wave and full-wave rectifiers are used, and either simple capacitor or capacitive-input PI filter circuits are used. Rectifier and filter type used for each of the secondary voltages depends on the load requirement. A single 130 Vac output from pin 12 of T2204 supplies the drive to the Z-Axis dc restorer circuitry. Power for the blower fan is supplied by the -15 V power supply line.

The center-tapped secondary winding from pins 13 to 15 of T2204 is used for the +5 V and -5 V supplies. Both are full-wave rectified and filtered using capacitive-input PI filters.

High-Voltage Supply

The high-voltage power supply uses two secondary windings of T2204: one for high-voltage multiplier U2230 and the other for the crt filament. Flying leads from the top of the transformer make the circuit connections into the high-voltage circuitry. The crt filament winding consists of a few turns of insulated wire.

The high-voltage winding attaches directly to the HV Multiplier. Outputs from HV Multiplier U2230 are the 13.7 kV to the crt anode via a high-voltage-insulated connecting lead and the -2.7 kV supplied to the crt cathode, focus grid, and intensity grid. The -2.7 kV supply is filtered by a two-section capacitive input RC filter. A neon lamp across the second section of the filter provides protection against arcing if there is a failure that can cause a large difference of potential to develop between the crt heater and cathode circuits.

MAIN BOARD POWER DISTRIBUTION (Diagram 13)

The Main Board Power Distribution diagram schematically displays the distribution paths and decoupling circuits for the low voltages from the Power Supply. The supply and ground connections to the various integrated circuits in the instrument are also shown. Use this diagram to aid circuit tracing when trying to locate a power supply loading problem associated with the Main Board.

http://www.tboamap.com

PROCESSOR BOARD POWER DISTRIBUTION (Diagram 14)

The continuing power distribution from the Main Board to the top board (Processor Board, A16) is shown in the Processor Board Power Distribution schematic diagram. Use Diagram 14 to aid in locating power supply loading problems that are isolated to the Processor Board.

INTERCONNECTION DIAGRAM (Diagram 15)

Circuit board interconnections with the plug, jack, pin numbers, and signal names shown are found in schematic Diagram 15. The diagram is useful in checking continuity of cable runs and signal paths from board to board through the instrument.

PERFORMANCE CHECK PROCEDURE

INTRODUCTION

The Performance Check Procedure is used to verify the Performance Requirements listed in Table 1–1 and to help determine the need for readjustment. These checks may also be used as an acceptance test or as a troubleshooting aid.

You do not have to remove the wrap–around cabinet from the 2245A to do this procedure. All checks can be made with controls and connectors accessible from the outside.

TEST EQUIPMENT REQUIRED

Table 4–1 lists the test equipment required for both the Performance Check Procedure in this section and the Adjustment Procedure in Section 5. Test equipment specifications described are the minimum necessary to provide accurate results. For test equipment operating information, refer to the appropriate test equipment instruction manual.

If the exact equipment given as an example in Table 4–1 is not available, use the Minimum Specification column to determine if any other test equipment can be used for the check. When you use equipment other than that recommended, you may have to make some changes to the test setups.

PERFORMANCE CHECK INTERVAL

To ensure instrument accuracy, check the performance of the 2245A after every 2000 hours of operation, or once each year if used infrequently. If the checks indicate a need for readjustment or repair, refer the instrument to a qualified service person.

PREPARATION

This procedure is divided into subsections so that individual sections of the instrument may be checked whenever a complete Performance Check is not needed. An "Equipment Required" block at the beginning of each subsection lists the equipment from Table 4–1 that is needed to do the checks in that subsection.

The initial front–panel control settings at the beginning of each subsection prepare the instrument for the first step of the subsection. Do each of the steps in a subsection completely and in order, to ensure the correct control settings for steps that follow.

To ensure the performance accuracies given in Table 1–1, let the instrument warm up for 20 minutes and then run the SELF CAL MEASUREMENTS routine. To run the SELF CAL MEASUREMENTS routine:

Press the CH 1 and CHOP/ALT VERTICAL MODE buttons at the same time to display the SERVICE MENU. Underline and select SELF CAL MEASUREMENTS by pressing the ADD (down–arrow) button. Press the CH 2 (RUN) button to start the routine, then CH 4 (QUIT) button to return to the normal oscilloscope mode.

NOTE

Performance accuracies are ensured only when the SELF CAL MEASUREMENTS routine is done AFTER the 20–minute warmup.

http://www.tbaman.com

Table 4-1
Test Equipment Required

Item and Description	Minimum Specification	Use	Example of Test Equipment
Leveled Sine-Wave Generator	Frequency: 250 kHz to above 150 MHz. Output amplitude: variable from 10 mV to 5 V p-p. Output impedance: 50 Ω. Amplitude accuracy: constant within 1.5% of reference frequency to 100 MHz.	Vertical, horizontal, triggering, measurement bandwidth, and Z-Axis checks and adjustments.	TEKTRONIX SG 503 Leveled Sine-Wave Generator.[a]
Calibration Generator	Standard-amplitude signal levels (dc and square wave): 5 mV to 50 V. Accuracy: ±0.25%. High-amplitude signal levels: 1 V to 60 V. Repetition rate: 1 kHz. Fast-rise signal level: 1 V. Repetition rate: 1 MHz. Rise time: 1 ns or less. Flatness: ±0.5%.	Signal source for gain and transient response checks and adjustments.	TEKTRONIX PG 506 Calibration Generator.[a]
Time-Mark Generator	Marker outputs: 5 ns to 0.5 s. Marker accuracy: ±0.1%. Trigger output: 1 ms to 0.1 µs, time-coincident with markers.	Horizontal checks and adjustments, display adjustment, and time cursor checks.	TEKTRONIX TG 501 Time-Mark Generator.[a]
Function Generator	Range: less than 1 Hz to 1 kHz; sinusoidal output; amplitude variable up to greater than 10 V p-p open circuit with dc offset adjust.	Low-frequency checks.	TEKTRONIX FG 502 Function Generator.[a]
Coaxial Cable (2 required)	Impedance: 50 Ω. Length: 42 in. Connectors: BNC.	Signal interconnection.	Tektronix Part Number 012-0057-01.
Precision Coaxial Cable	Impedance: 50 Ω. Length: 36 in. Connectors: BNC.	Used with PG 506 Calibration Generator and SG 503 Sine-Wave Generator.	Tektronix Part Number 012-0482-00.

[a]Requires a TM500-series power module.

http://www.ebanman.com

Table 4-1 (cont)

Item and Description	Minimum Specification	Use	Example of Test Equipment
Termination (2 required)	Impedance: 50 Ω. Connectors: BNC.	Signal termination.	Tektronix Part Number 011-0049-01.
10X Attenuator	Ratio: 10X. Impedance: 50 Ω. Connectors: BNC.	Triggering checks.	Tektronix Part Number 011-0059-02.
2X Attenuator	Ratio: 2X. Impedance: 50 Ω. Connectors: BNC.	Triggering checks.	Tektronix Part Number 011-0069-02.
Adapter	Connectors: BNC male-to-miniature-probe tip.	Signal interconnection.	Tektronix Part Number 013-0084-02.
Alignment Tool	Length: 1-in shaft. Bit size: 3/32 in. Low capacitance; insulated.	Adjust TRACE ROTATION pot. Adjust variable capacitors and resistors.	Tektronix Part Number 003-0675-00.
Test Oscilloscope	Bandwidth: 20 MHz.	Z-Axis response adjustment.	TEKTRONIX 2246A.
Dual-Input Coupler	Connectors: BNC female-to-dual-BNC male.	Signal interconnection.	Tektronix Part Number 067-0525-01.
T-Connector	Connectors, BNC.	Signal interconnection.	Tektronix Part Number 103-0030-00.
Precision Normalizer	Input resistance: 1 MΩ: Input capacitance: 20 pF.	Input capacitance adjustments.	Tektronix Part Number 067-1129-00.
TV Signal Generator	Provide composite TV video and line sync signals.	Check TV Trigger circuit.	Tektronix 067-0601-00. Calibration fixture with 067-5002-00 (525/60) and 067-5010-00 (1201/60) plug-ins.
Digital Multimeter (DMM)	Dc volts range: 0 to 140 V. Dc voltage accuracy: ±0.15%. 4 1/2 digit display.	Power supply voltage checks and adjustments.	Tektronix DM 501A Digital Multimeter.[a]

[a]Requires a TM500-series power module.

http://www.ebanian.com

INDEX TO PERFORMANCE CHECK PROCEDURE

Display

1. TRACE ROTATION 4-5
2. Geometry 4-5

Vertical

1. Input COUPLING Functional Check 4-6
2. CH 1 and CH 2 VOLTS/DIV Trace Shift 4-6
3. CH 3 and CH 4 VOLTS/DIV Trace Shift 4-7
4. CH 1 and CH 2 VAR VOLTS/DIV Trace Shift 4-7
5. CH 1 and CH 2 Input COUPLING Trace Shift 4-7
6. CH 2 INVERT Trace Shift 4-7
7. CH 1 and CH 2 VAR VOLTS/DIV Range ... 4-7
8. Low-Frequency Linearity 4-8
9. CH 1 and CH 2 Vertical Deflection Accuracy 4-8
10. CH 3 and CH 4 Vertical Deflection Accuracy 4-8
11. ADD Mode and CH 2 INVERT Deflection Accuracy 4-9
12. Vertical POSITION Range (all channels) ... 4-9
13. CH 1 to CH 2 Signal Delay Match 4-10
14. CH 1 to CH 4 Signal Delay Match 4-10
15. CH 3 to CH 4 Signal Delay Match 4-10
16. CH 1 and CH 2 Vertical Bandwidth 4-10
17. CH 3 and CH 4 Vertical Bandwidth 4-11
18. SCOPE BW (Bandwidth Limit) Accuracy .. 4-11
19. Common-mode Rejection Ratio 4-11
20. Channel Isolation 4-12
21. AC-Coupled Lower -3 dB Point 4-12
22. Vertical ALT and CHOP Modes 4-12
23. BEAM FIND Functional Check 4-13
24. A and B Trace Separation 4-13

Triggering

1. 500 Hz Trigger Sensitivity 4-14
2. 500 kHz Trigger Sensitivity 4-15
3. 25 MHz Trigger Sensitivity 4-15
4. 150 MHz Trigger Sensitivity 4-15
5. Single Sweep Mode 4-16
6. Trigger LEVEL Control Range 4-16
7. TV Field Trigger Sensitivity 4-17
8. TV Line Trigger Sensitivity 4-17
9. Line Trigger Functional Check 4-17

Horizontal

1. A and B Sweep Length 4-18
2. Horizontal POSITION Range 4-18
3. VAR SEC/DIV Range 4-18
4. Magnifier Registration 4-19
5. A and B Timing Accuracy and Linearity . 4-19
6. A and B Magnified Timing Accuracy and Linearity 4-19
7. Delay Time Jitter 4-21
8. Delay Time Accuracy 4-21
9. Delay Time Position Range 4-21
10. X-Axis Gain Accuracy 4-21
11. X-Y Phase Difference 4-22
12. X-Axis Bandwidth 4-22

Measurement Cursors

1. |← SEC →| and |← 1/SEC →| Cursor Accuracy 4-23
2. |← VOLTS →|Cursor Accuracy 4-23

External Z-Axis, Probe Adjust, and Auto Setup Functions

1. Check External Z-Axis Input 4-24
2. PROBE ADJUST Output 4-24
3. AUTO SETUP Functional Check 4-24

http://www.soaman.com

DISPLAY

Equipment Required (See Table 4-1)

Time-mark generator
50 Ω BNC termination
50 Ω BNC coaxial cable

1. TRACE ROTATION

a. Set:

READOUT (Intensity)	For a viewable readout
A INTEN	For a viewable trace
VERTICAL MODE	CH 1
CH 1 VOLTS/DIV	0.1 V
CH 1 COUPLING	AC
SCOPE BW	Off
A/B SELECT	A Trigger
TRIGGER MODE	AUTO LEVEL
TRIGGER SOURCE	VERT
TRIGGER CPLG	DC
TRIGGER SLOPE	⌐ (positive-going)
TRIGGER HOLDOFF	Min
TRIGGER LEVEL	12 o'clock
Horizontal MODE	A
Horizontal POSITION	12 o'clock
A SEC/DIV	2 μs
CLEAR MEAS'MT	Press to remove measurement cursors.
FOCUS	For best defined display

b. Position trace vertically to the center graticule line.

c. CHECK—trace rotation control range is adequate to align trace with center graticule line using a small straight-bladed alignment tool.

d. ADJUST—trace parallel to center horizontal graticule line.

2. Geometry

a. Connect time-mark generator (TG 501) to CH 1 via a 50 Ω BNC coaxial cable and a 50 Ω BNC termination.

b. Set generator for 0.2 μs time markers.

c. Position the bottom of the CH 1 signal below the bottom graticule line.

d. CHECK—deviation of any vertical line within the center eight horizontal divisions does not exceed 0.1 division (half a minor division).

e. Set CH 1 COUPLING to GND.

f. Position trace slowly from the bottom graticule line to the top graticule line while making the following check.

g. CHECK—bowing or tilt of baseline trace doesn't exceed 0.1 division (half a minor division) within the eight vertical divisions.

h. Disconnect test signal from the 2245A.

http://www.ebaman.com

VERTICAL

Equipment Required (See Table 4-1)

Leveled sine-wave generator	50 Ω precision BNC coaxial cable
Calibration generator	50 Ω termination
Function generator	Adapter BNC-male-to-miniature probe tip
50 Ω BNC coaxial cable	Dual-input coupler

1. Input COUPLING Functional Check

a. Set:

READOUT (Intensity)	For a viewable readout
A INTEN	For a viewable trace
VERTICAL MODE	CH 1 and CH 2
CH 1 and CH 2 VOLTS/DIV	1 V
CH 1 and CH 2 Input COUPLING	DC
SCOPE BW	Off
CH 2 INVERT	Off
A/B SELECT	A TRIGGER
TRIGGER MODE	AUTO LEVEL
TRIGGER SOURCE	VERT
TRIGGER CPLG	DC
TRIGGER SLOPE	⎍ (positive-going)
TRIGGER LEVEL	12 o'clock
TRIGGER HOLDOFF	Min
Horizontal POSITION	12 o'clock
Horizontal MODE	A
SEC/DIV	0.5 ms
FOCUS	For best-defined display
CLEAR MEAS'MT	Press to remove measurement cursors

b. Connect function generator (FG 502) sine-wave output to the CH 1 input via a 50 Ω BNC coaxial cable and a 50 Ω BNC termination.

c. Set function generator output for 1 kHz sine-wave signal of five divisions peak-to-peak with maximum positive dc offset.

d. Position the bottom of the signal to the center horizontal graticule line.

e. Set CH 1 Input COUPLING to AC.

f. CHECK—display is centered about the center horizontal graticule line.

g. Move the test signal to the CH 2 input.

h. Set CH 2 VERTICAL MODE to on (CH 1 off).

i. Repeat the procedure for CH 2.

j. Disconnect the test signal from the 2245A.

2. CH 1 and CH 2 VOLTS/DIV Trace Shift

a. Set:

CH 1 and CH 2 VERTICAL MODE	On
CH 1 and CH 2 VOLTS/DIV	2 mV
CH 1 and CH 2 Input COUPLING	GND

b. Set VERTICAL MODE to CH 1 (CH 2 off).

c. Position trace to center horizontal graticule line.

d. Switch CH 1 VOLTS/DIV through all positions from 2 mV to 5 V.

e. CHECK—trace shift does not exceed 0.2 division between steps.

f. Set VERTICAL MODE to CH 2 (CH 1 off).

g. Position CH 2 trace to the center horizontal graticule line.

h. Switch CH 2 VOLTS/DIV through all positions from 2 mV to 5 V.

http://www.ebamanuals.com

i. CHECK—trace shift does not exceed 0.2 division between steps.

3. CH 3 and CH 4 VOLTS/DIV Trace Shift

a. Set VERTICAL MODE to CH 3 (CH 2 off).

b. Position trace to the center horizontal graticule line.

c. Switch CH 3 VOLTS/DIV between 0.1 V and 0.5 V.

d. CHECK—trace shift does not exceed one division.

e. Set VERTICAL MODE to CH 4 (CH 3 off).

f. Position trace to the center horizontal graticule line.

g. Switch CH 4 VOLTS/DIV between 0.1 V and 0.5 V.

h. CHECK—trace shift does not exceed one division.

4. CH 1 and CH 2 VAR VOLTS/DIV Trace Shift

a. Set:

VERTICAL MODE	CH 1 (CH 4 off)
CH 1 VOLTS/DIV	2 mV

b. Position trace to center graticule line.

c. Set CH 1 VAR VOLTS/DIV fully CCW (counter-clockwise).

d. CHECK—trace shift does not exceed one division.

e. Set:

CH 1 VAR VOLTS/DIV	Detent (calibrated)
VERTICAL MODE	CH 2 (CH 1 off)
CH 2 VOLTS/DIV	2 mV

f. Position trace to center graticule line.

g. Set CH 2 VAR VOLTS/DIV fully CCW.

h. CHECK—trace shift does not exceed one division.

i. Set CH 2 VAR VOLTS/DIV to detent (calibrated) position.

5. CH 1 and CH 2 Input COUPLING Trace Shift

a. Position trace to center graticule line.

b. Set CH 2 Input COUPLING to DC.

c. CHECK—trace shift does not exceed 0.25 division.

d. Set:

VERTICAL MODE	CH 1 (CH 2 off)
CH 1 Input COUPLING	GND

e. Position trace to center graticule line.

f. Set CH 1 Input COUPLING to DC.

g. CHECK—trace shift does not exceed 0.25 division.

6. CH 2 INVERT Trace Shift

a. Set:

VERTICAL MODE	CH 2 (CH 1 off)
CH 2 Input COUPLING	GND

b. Position trace to center horizontal graticule line.

c. Set CH 2 INVERT On.

d. CHECK—trace shift does not exceed one division.

e. Set:

CH 2 INVERT	Off
CH 2 Input COUPLING	DC

7. CH 1 and CH 2 VAR VOLTS/DIV Range

a. Set VERTICAL MODE to CH 1 and CH 2.

b. Position CH 1 and CH 2 traces to the center horizontal graticule line.

c. Connect calibration generator (PG 506) Std Ampl output to the CH 1 input via 50 Ω precision BNC coaxial cable. Set generator Std Ampl output to 50 mV.

d. Set:

CH 1 and CH 2 VOLTS/DIV	10 mV
CH 1 VAR VOLTS/DIV	Fully CCW

e. CHECK—the signal amplitude is two divisions or less.

http://www.ebaman.com

f. Set:

CH 1 VAR VOLTS/DIV	Detent (calibrated)
CH 1 VERTICAL MODE	Off

g. Move the test signal to the CH 2 input.

h. Set CH 2 VAR VOLTS/DIV fully CCW.

i. Repeat the CHECK procedure for CH 2.

j. Set CH 2 VAR VOLTS/DIV to detent (calibrated) position.

8. Low-Frequency Linearity

a. Set:

VERTICAL MODE	CH 1
CH 1 VOLTS/DIV	10 mV
SCOPE BW	On

b. Set calibration generator to Std Ampl output, 20 mV.

c. Move the test signal to the CH 1 input.

d. Position the top of the signal to top graticule line.

e. Check the signal amplitude is between 1.9 and 2.1 divisions.

f. Set bottom of the signal to bottom graticule line.

g. Check the signal amplitude is between 1.9 and 2.1 divisions.

h. Repeat the procedure for CH 2.

9. CH 1 and CH 2 Vertical Deflection Accuracy

a. Set CH 2 VOLTS/DIV to 2 mV.

b. Set calibration generator to Std Ampl output, 10 mV.

c. CHECK—all positions of the VOLTS/DIV settings for correct signal to graticule accuracy, using the settings in Table 4-2, Signal-to-Graticule Accuracy, for the checks.

d. Set calibration generator to Std Ampl output, 10 mV.

e. Move the test signal to the CH 1 input.

f. Set:

VERTICAL MODE	CH 1 (CH 2 off)
CH 1 VOLTS/DIV	2 mV

g. Repeat CHECK procedure for CH 1.

Table 4-2
Signal-to-Graticule Accuracy

VOLTS/DIV Setting	Std Ampl Setting	Deflection Accy (in divisions)
2 mV	10 mV	4.90 to 5.10
5 mV	20 mV	3.92 to 4.08
10 mV	50 mV	4.90 to 5.10
20 mV	100 mV	4.90 to 5.10
50 mV	200 mV	3.92 to 4.08
0.1 V	500 mV	4.90 to 5.10
0.2 V	1 V	4.90 to 5.10
0.5 V	2 V	3.92 to 4.08
1 V	5 V	4.90 to 5.10
2 V	10 V	4.90 to 5.10
5 V	10 V	3.92 to 4.08

http://www.ebaman.com

10. CH 3 and CH 4 Vertical Deflection Accuracy

a. Set:

VERTICAL MODE	CH 3 and CH 4 on; CH 1 off
CH 3 and CH 4 VOLTS/DIV	0.1 V

b. Position CH 3 and CH 4 traces to the second graticule line down from the center horizontal graticule line.

c. Move CH 1 test setup to the CH 3 input.

d. Set calibration generator to Std Ampl output, 0.5 V.

e. CHECK—the signal amplitude is between 4.90 and 5.10 divisions.

f. Move the test signal to the CH 4 input.

g. Set CH 3 VERTICAL MODE to Off.

h. Repeat CHECK for CH 4.

i. Set CH 3 and CH 4 VOLTS/DIV to 0.5 V.

j. Set calibration generator to Std Ampl output, 2 V.

k. CHECK—the signal amplitude is between 3.92 and 4.08 divisions.

l. Set CH 3 VERTICAL MODE On (CH 4 off).

m. Move the test signal to the CH 3 input.

n. Repeat CHECK procedure for CH 3.

o. Disconnect the test setup from the 2245A.

11. ADD Mode and CH 2 INVERT Deflection Accuracy

a. Set:

VERTICAL MODE	ADD (all others off)
CH 1 and CH 2 VOLTS/DIV	0.1 V
CH 1 and CH 2 Input COUPLING	DC

b. Connect calibration generator Std Ampl output to the CH 1 and CH 2 inputs via 50 Ω precision BNC coaxial cable and a BNC dual-input coupler.

c. Set the calibration generator to Std Ampl output, 0.2 V.

d. Position the ADD signal to the center of the crt graticule with the CH 1 and CH 2 POSITION controls.

e. CHECK—that the ADD signal amplitude is between 3.92 and 4.08 divisions.

f. Set CH 2 INVERT On.

h. CHECK—that the ADD signal amplitude is 0.08 division (less than half a minor graticule division) or less excluding trace width (sweep will free run).

g. Disconnect the test setup from the 2245A.

12. Vertical POSITION Range (all channels)

a. Set:

A SEC/DIV	0.1 ms
VERTICAL MODE	CH 1 On (ADD off)
CH 1 VOLTS/DIV	1 V
CH 2 INVERT	Off
SCOPE BW	Off
CH 1 and CH 2 Input COUPLING	AC

b. Connect leveled sine-wave generator (SG 503) output to the CH 1 and CH 2 inputs via a 50 Ω BNC coaxial cable, a 50 Ω BNC termination, and a BNC dual-input coupler.

c. Position trace to center horizontal graticule line.

d. Set leveled sine-wave generator output for two-division signal at 50 kHz.

e. Set:

CH 1 VOLTS/DIV	0.1 V
CH 1 POSITION	Fully CW (clockwise)

f. CHECK—that the bottom of the waveform is at least one division above the center horizontal graticule line.

g. Set CH 1 POSITION fully CCW.

h. CHECK—that the top of the waveform is at least one division below the center horizontal graticule line.

i. Set:

CH 1 POSITION	12 o'clock
VERTICAL MODE	CH 2 (CH 1 off)
CH 2 POSITION	Fully CW

j. CHECK—that the bottom of the waveform is at least one division above the center horizontal graticule line.

k. Set CH 2 POSITION fully CCW.

l. CHECK—that the top of the waveform is at least one division below the center horizontal graticule line.

m. Set CH 2 POSITION to 12 o'clock.

n. Move the BNC dual-input coupler from the CH 1 and CH 2 inputs to the CH 3 and CH 4 inputs.

http://www.ebaman.com

o. Set:

VERTICAL MODE	CH 3 (CH 2 off)
CH 3 and CH 4 VOLTS/DIV	0.1 V
CH 3 POSITION	Fully CW

p. CHECK—that the bottom of the waveform is at least one division above the center graticule line.

q. Set CH 3 POSITION fully CCW.

r. CHECK—that the top of the waveform is at least one division below the center graticule line.

s. Set:

CH 3 POSITION	12 o'clock
VERTICAL MODE	CH 4 (CH 3 off)

t. Repeat the procedure for CH 4.

u. Set CH 4 POSITION to 12 o'clock.

v. Disconnect the test setup from the 2245A.

13. CH 1 to CH 2 Signal Delay Match

a. Set:

VERTICAL MODE	CH 1 and CH 2
CH 1 and CH 2 Input COUPLING	DC
CH 1 and CH 2 VOLTS/DIV	0.1 V
SEC/DIV	20 ns
TRIGGER SOURCE	CH 3

b. Superimpose the CH 1 and CH 2 traces at the 100% graticule marking.

c. Connect calibration generator (PG 506) fast rise, rising-edge signal to the CH 1 and CH 2 inputs via a 50 Ω precision BNC coaxial cable, a 50 Ω BNC termination, and a BNC dual-input coupler.

d. Connect calibration generator trig out signal to the CH 3 input via a 50 Ω BNC coaxial cable and a 50 Ω BNC termination.

e. Set the calibration generator output for five divisions of signal amplitude at 1 MHz.

f. Position the rising edges of the superimposed waveforms horizontally to the center vertical graticule line.

g. Set X10 MAG On (for 2 ns/div sweep speed).

h. CHECK—that the leading edges of the two waveforms have less than 0.1 horizontal division separation at the center graticule line excluding trace width.

14. CH 1 to CH 4 Signal Delay Match

a. Set VERTICAL MODE to CH 1 and CH 4 (CH 2 off).

b. Move the CH 2 signal to the CH 4 input connector.

c. Superimpose the CH 4 waveform on the CH 1 waveform.

d. CHECK—that the leading edges of the two waveforms have less than 0.1 horizontal division separation at the center graticule line excluding trace width.

15. CH 3 to CH 4 Signal Delay Match

a. Set:

VERTICAL MODE	CH 3 and CH 4 (CH 1 off)
TRIGGER SOURCE	CH 2

b. Move the CH 1 signal to the CH 3 input and the CH 3 trigger signal to the CH 2 input.

c. Superimpose CH 3 and CH 4 waveforms at the center graticule line.

d. CHECK—that the leading edges of the two waveforms have less than 0.1 horizontal division separation at the center graticule line.

e. Disconnect the test setup.

16. CH 1 and CH 2 Vertical Bandwidth

a. Set:

X10 MAG	Off
VERTICAL MODE	CH 1 (CH 3 and CH 4 off)
SEC/DIV	0.1 ms
CH 1 VOLTS/DIV	2 mV
CH 1 and CH 2 Input COUPLING	DC
TRIGGER SOURCE	VERT
Horizontal POSITION	12 o'clock

http://www.ebaman.com

b. Connect leveled sine-wave generator (SG 503) output to the CH 1 input via a 50 Ω precision BNC coaxial cable and a 50 Ω BNC termination.

c. Set the leveled sine-wave generator output for a six-division signal amplitude at 50 kHz.

d. Set the generator Frequency Range and Frequency Variable controls for a 90 MHz output signal.

e. CHECK—the displayed signal amplitude is 4.2 divisions or more.

f. Repeat the frequency setup and CHECK procedure for VOLTS/DIV settings of 5 mV through 1 V, except perform CHECK at 100 MHz.

g. Move the test signal to the CH 2 input.

h. Set:

VERTICAL MODE	CH 2 (CH 1 off)
CH 2 VOLTS/DIV	2 mV

i. Repeat the complete Bandwidth check procedure for Channel 2.

17. CH 3 and CH 4 Vertical Bandwidth

a. Set:

VERTICAL MODE	CH 3 (CH 2 off)
CH 3 and CH 4 VOLTS/DIV	0.1 V

b. Connect leveled sine-wave generator (SG 503) output to the CH 3 input via a 50 Ω precision BNC coaxial cable and a 50 Ω BNC termination.

c. Set the generator output for a six-division signal display at 50 kHz.

d. Set the generator Frequency Range and Frequency Variable controls for a 100 MHz output frequency.

e. CHECK—that the signal display amplitude is 4.2 divisions or more.

f. Repeat the procedure for 0.5 VOLTS/DIV setting.

g. Move the test signal to the CH 4 input.

h. Set VERTICAL MODE to CH 4

i. Repeat the procedure for CH 4.

18. SCOPE BW (Bandwidth Limit) Accuracy

a. Set:

VERTICAL MODE	CH 1 (CH 4 off)
CH 1 VOLTS/DIV	10 mV
SCOPE BW	On

b. Move test signal from the CH 4 input to the CH 1 input.

c. Set leveled sine-wave generator (SG 503) output for a six-division signal amplitude at 50 kHz.

d. Set the leveled sine-wave generator Frequency Range and Frequency Variable controls to produce a signal display amplitude of 4.2 divisions.

e. CHECK—that the sine-wave generator output frequency is between 17 MHz and 23 MHz.

f. Disconnect the test setup.

19. Common-mode Rejection Ratio

a. Connect leveled sine-wave generator (SG 503) output to the CH 1 and CH 2 input connectors via a 50 Ω precision BNC coaxial cable, a 50 Ω BNC termination, and a BNC dual-input coupler.

b. Set the leveled sine-wave generator output for an eight-division signal-display amplitude at 50 kHz.

c. Set:

ADD MODE	On
CH 2 VOLTS/DIV	10 mV
CH 2 INVERT	On
CH 1 VERTICAL MODE	Off
SCOPE BW	Off

d. Adjust CH 1 or CH 2 VAR VOLTS/DIV (as needed) for smallest signal amplitude.

e. Set the leveled sine-wave output frequency to 50 MHz.

f. Set:

CH 1 VERTICAL MODE	On
ADD MODE	Off

g. Set the leveled sine-wave output amplitude for an eight-division display.

h. Set:

ADD MODE	On
CH 1	Off

http://www.ebaman.com

i. CHECK—the signal is less than 0.8 division in amplitude.

j. Disconnect the test setup.

20. Channel Isolation

a. Set:

CH 1 and CH 2 VERTICAL MODE	On (ADD off)
CH 2 INVERT	Off
CH 1, CH 2, CH 3, and CH 4 VOLTS/DIV	0.1 V
TRIGGER SOURCE	CH 1

b. Connect the leveled sine-wave generator (SG 503) output to the CH 1 input via a 50 Ω precision BNC coaxial cable and a 50 Ω BNC termination.

c. Set the leveled sine-wave generator (SG 503) output for a five-division signal display amplitude at 100 MHz.

d. Set CH 2, CH 3, and CH 4 VERTICAL MODE On (CH 1 off).

e. CHECK—display amplitude is 0.1 division or less, excluding trace width, on the CH 2, CH 3, and CH 4 traces.

f. Move sine-wave generator signal to the CH 2 input.

g. Set:

CH 1, CH 3, and CH 4 VERTICAL MODE	On (CH 2 off)
TRIGGER SOURCE	CH 2

h. CHECK—display amplitude is 0.1 division or less, excluding trace width, on the CH 1, CH 3, and CH 4 traces.

i. Move sine-wave generator signal to the CH 3 input.

j. Set:

CH 1, CH 2, and CH 4 VERTICAL MODE	On (CH 3 off)
TRIGGER SOURCE	CH 3

k. CHECK—display amplitude is 0.1 division or less, excluding trace width, on the CH 1, CH 2, and CH 4 traces.

l. Move sine-wave generator signal to the CH 4 input.

m. Set:

CH 1, CH 2, and CH 3 VERTICAL MODE	On (CH 4 off)
TRIGGER SOURCE	CH 4

n. CHECK—display amplitude is 0.1 division or less, excluding trace width, on the CH 1, CH 2, and CH 3 traces.

o. Disconnect the test setup.

21. AC-Coupled Lower -3 dB Point

a. Set:

A SEC/DIV	10 ms
VERTICAL MODE	CH 1 (all others off)
TRIGGER SOURCE	VERT
TRIGGER MODE	NORM
TRIGGER HOLDOFF	Fully CW

b. Connect function generator (FG 502) output to the CH 1 input via a 50 Ω BNC coaxial cable and a 50 Ω BNC termination.

c. Set the function generator output controls to produce a six-division sine-wave display at 10 Hz (with no dc offset).

d. Set CH 1 Input COUPLING to AC.

e. CHECK—display amplitude is 4.2 divisions or more.

f. Set VERTICAL MODE to CH 2 (CH 1 off).

g. Repeat the procedure for CH 2.

h. Disconnect the test equipment from the 2245A.

22. Vertical ALT and CHOP Modes

a. Set:

VERTICAL MODE	CH 1, CH 2, CH 3, CH 4 On
CHOP VERTICAL MODE	Off (ALT mode)
CH 1 and CH 2 VOLTS/DIV	10 mV
CH 3 and CH 4 VOLTS/DIV	0.1 V
CH 1 and CH 2 Input COUPLING	DC

http://www.ebaman.com

Horizontal MODE	A
SEC/DIV	1 ms
TRIGGER MODE	AUTO LEVEL

b. Position all traces for two divisions of separation with the CH 1 trace near the top; then in order down the graticule area with the CH 4 trace near the bottom.

c. Set SEC/DIV to 10 ms.

d. CHECK—that four traces are sweeping across the screen alternately.

e. Set CHOP VERTICAL MODE On.

f. CHECK—that four traces are sweeping across the screen simultaneously.

23. BEAM FIND Functional Check

a. Push BEAM FIND in and hold.

b. CHECK—the signal is visible and compressed fully within the graticule area as the horizontal and vertical position controls are rotated through their ranges.

c. Release the BEAM FIND button.

d. Set all Vertical and Horizontal POSITION controls at the 12 o'clock position.

24. A and B Trace Separation

a. Set:

A SEC/DIV	1 ms
VERTICAL MODE	CH 1 (others off)
Horizontal MODE	ALT
B SEC/DIV	0.5 ms
A/B SELECT	B
B Trigger MODE	RUNS AFTER
TRACE SEP	Fully CW

b. Position the CH 1 trace below the center horizontal graticule line to display the separated B trace.

c. CHECK—for at least four divisions of upward trace separation between the B trace and the A trace.

d. Set TRACE SEP fully CCW.

e. Position the CH 1 trace above the center horizontal graticule line to display the separated B trace.

f. CHECK—for at least four divisions downward trace separation of the B trace from the A trace.

http://www.obamanual.com

TRIGGERING

Equipment Required (See Table 4-1)

Leveled sine-wave generator	Function generator
50 Ω BNC coaxial cable	10X BNC attenuator
2X BNC attenuator	50 Ω BNC termination
Dual-input coupler	TV signal generator

1. 500 Hz Trigger Sensitivity

a. Set:

READOUT (Intensity)	For a viewable readout
A INTEN	For a viewable trace
VERTICAL MODE	CH 1
SCOPE BW	On
CH 1 and CH 2 Input COUPLING	DC
CH 1 VOLTS/DIV	0.1 V
Horizontal MODE	A
A SEC/DIV	2 ms
Horizontal POSITION	12 o'clock
A/B SELECT	A Trigger
TRIGGER MODE	AUTO LEVEL
TRIGGER SOURCE	VERT
TRIGGER CPLG	AC
TRIGGER SLOPE	⌐ (positive-going)
TRIGGER HOLDOFF	Min
FOCUS	For best-defined display
CLEAR MEAS'MT	Press to remove measurement cursors.

b. Connect function generator (FG 502) output to the CH 1 input via a 50 Ω BNC coaxial cable and a 50 Ω BNC termination.

c. Set function generator (FG 502) output to produce a 7.0 division sine-wave display at 500 Hz.

d. Add a 10X and a 2X BNC attenuator before the 50 Ω BNC termination (for a 0.35 division display).

NOTE

The TRIGGER LEVEL control may be used to obtain a stable display.

e. CHECK—that the display is stably triggered with DC, HF REJ, and AC Trigger CPLG; and that the display will not trigger on NOISE REJ or LF REJ Trigger CPLG.

f. Set:

Horizontal MODE	B
TRIGGER CPLG	DC
A/B SELECT	B Trigger
TRIGGER MODE	NORM
TRIGGER SOURCE	VERT
TRIGGER SLOPE	⌐ (positive-going)
B SEC/DIV	0.5 ms
DELAY Time	?0.000 ms (minimum delay time)
B INTEN	For viewable display

NOTE

It may be necessary to adjust the TRIGGER LEVEL control to obtain a display.

g. CHECK—that, using the Trigger LEVEL control, the display can be stably triggered in DC, HF REJ, and AC Trigger CPLG; and that the display cannot be triggered in NOISE REJ or LF REJ Trigger CPLG.

h. Disconnect the test setup from the CH 1 input.

http://www.ebaman.com

2. 500 kHz Trigger Sensitivity

a. Set:

SCOPE BW	Off
Horizontal MODE	A
A/B SELECT	A Trigger
A SEC/DIV	2 μs

b. Connect leveled sine-wave generator (SG 503) output to the CH 1 input via a 50 Ω BNC coaxial cable and a 50 Ω BNC termination.

c. Set leveled sine-wave generator output to produce a 7.0 division sine-wave display amplitude at 500 kHz.

d. Add a 10X and a 2X BNC attenuator before the 50 Ω BNC termination (for a 0.35 division display amplitude).

e. CHECK—that the display cannot be triggered in either HF REJ of NOISE REJ CPLG.

f. Set:

Horizontal MODE	B
A/B SELECT	B Trigger
B SEC/DIV	1 μs

g. CHECK—that the display cannot be triggered in HF REJ or NOISE REJ CPLG by adjusting the Trigger LEVEL control.

3. 25 MHz Trigger Sensitivity

a. Set:

Horizontal MODE	A
A/B SELECT	A Trigger
TRIGGER CPLG	DC
A SEC/DIV	50 ns

b. Remove the 10X and 2X BNC attenuators from the signal path.

c. Set leveled sine-wave generator output to produce a 7.0 division display amplitude at 25 MHz.

d. Add a 10X and a 2X BNC attenuator before the 50 Ω BNC termination.

e. CHECK—that the display is stably triggered in DC, LF REJ, and AC Trigger CPLG; the display is not triggered in NOISE REJ and HF REJ Trigger CPLG settings.

f. Set:

TRIGGER CPLG	AC
Horizontal MODE	B
A/B SELECT	B Trigger
B SEC/DIV	20 ns

g. CHECK—that, using the Trigger LEVEL control, the display can be stably triggered in DC, LF REJ, and AC Trigger CPLG; the display cannot be triggered in NOISE REJ and HF REJ Trigger CPLG settings.

h. Set leveled sine-wave generator (SG 503) to produce a 1.4 division display at 25 MHz.

i. CHECK—that the display can be stably triggered with NOISE REJ Trigger CPLG but does not trigger with HF REJ CPLG.

j. Set:

Horizontal MODE	A
A/B SELECT	A Trigger

k. CHECK—that the display is stably triggered with NOISE REJ Trigger CPLG but does not trigger with HF REJ CPLG. (The Trigger LEVEL control may be adjusted to improve display stability in NOISE REJ CPLG.)

4. 150 MHz Trigger Sensitivity

a. Set:

TRIGGER MODE	AUTO
TRIGGER CPLG	DC

b. Set leveled sine-wave generator to produce a 1.0 division display at 150 MHz.

c. CHECK—that the display is stably triggered in DC, LF REJ, and AC Trigger CPLG; the display is not triggered in NOISE REJ and HF REJ Trigger CPLG.

d. Set:

Horizontal MODE	B
A/B SELECT	B Trigger

e. CHECK—that, using the Trigger LEVEL control, the display can be stably triggered in DC, LF REJ, and AC Trigger CPLG; the display cannot be triggered in NOISE REJ and HF REJ Trigger CPLG.

http://www.ebaman.com

f. Set:

Horizontal MODE	A
VERTICAL MODE	CH 2 (CH 1 off)
CH 2, CH 3, and CH 4	
VOLTS/DIV	0.1 V
A/B SELECT	A Trigger
TRIGGER CPLG	DC

g. Move test signal from CH 1 to the CH 2 input.

h. Set leveled sine-wave generator output to produce a 1.0 division display amplitude at 150 MHz.

i. CHECK—that a stable display can be obtained. (The Trigger LEVEL control may be adjusted to improve the display stability.)

j. Repeat the procedure for CH 3 and CH 4 (turn on the appropriate VERTICAL MODE and move the test signal as required).

k. Move test signal to the CH 1 input.

l. Set VERTICAL MODE to CH 1 (others off).

m. Remove the 2X BNC attenuator from the test signal path.

n. Set leveled sine-wave generator output for a 2.2 division display amplitude at 100 MHz.

o. CHECK—that the display is stably triggered with NOISE REJ Trigger CPLG but is not triggered with HF REJ Trigger CPLG.

p. Set:

TRIGGER CPLG	DC
Horizontal MODE	B
A/B SELECT	B Trigger

q. Repeat 100 MHz NOISE REJ Trigger CPLG procedure for the B Trigger.

5. Single Sweep Mode

a. Set:

Horizontal MODE	A
A SEC/DIV	10 μs
A/B SELECT	A Trigger
TRIGGER MODE	AUTO LEVEL

b. Remove the 10X BNC attenuator from the test signal path.

c. Set leveled sine-wave generator output to produce a 7.0 division display amplitude at 50 kHz.

d. Add a 10X and a 2X BNC attenuator before the 50 Ω BNC termination. (Display should stably trigger with AUTO LEVEL finding the correct trigger level setting.)

e. Set:

A TRIGGER MODE	NORM
CH 1 Input COUPLING	GND
TRIGGER MODE	SGL SEQ

f. CHECK—that the Trigger READY LED turns on and remains on.

g. Set:

A INTEN	3/4 fully CW
CH 1 Input COUPLING	DC (see CHECK below)

h. CHECK—that the TRIG'D LED flashes, and the READY LED turns off after a single sweep and readout display occurs when the Input COUPLING switches to DC.

6. Trigger LEVEL Control Range

a. Set:

TRIGGER MODE	AUTO (not AUTO LEVEL)
TRIGGER LEVEL	Fully CCW
A INTEN	For a good viewing intensity

b. Remove 10X and 2X BNC attenuators from the test signal path.

c. Reduce leveled sine-wave generator output level until a stably triggered display is just obtainable.

d. Set TRIGGER LEVEL fully CW.

e. Set leveled sine-wave generator output for a stable display (if necessary).

f. Set CH 1 VOLTS/DIV to 1 V.

g. CHECK—that the CH 1 signal display amplitude is four divisions or more (peak-to-peak). Note that the signal is not triggered.

h. Disconnect the test setup from the 2245A.

http://www.ebaman.com

7. TV Field Trigger Sensitivity

a. Set:

VERTICAL MODE	CH 2 (CH 1 off)
CH 2 VOLTS/DIV	2 V
SEC/DIV	0.2 ms
TRIGGER SLOPE	⌝ (negative-going)
TRIGGER MODE	TV FIELD

b. Connect TV signal generator negative-going sync pulse output to the CH 1 input via a 50 Ω BNC cable.

c. Set CH 2 VAR VOLTS/DIV control for a 0.5 division composite sync signal.

d. CHECK—that a stable display is obtained.

e. Set:

CH 2 INVERT	On
TRIGGER SLOPE	⌐ (positive-going)

f. CHECK—that a stable display is obtained.

8. TV Line Trigger Sensitivity

a. Set:

SEC/DIV	20 µs
TRIGGER MODE	TV LINE
TRIGGER HOLDOFF	For a single triggered display

b. CHECK—that a stable display is obtained.

c. Set:

CH 2 INVERT	Off
TRIGGER SLOPE	⌝ (negative-going)

d. CHECK—that a stable display is obtained.

e. Set CH 2 VAR VOLTS/DIV to detent position (calibrated).

f. Disconnect the TV signal generator from the 2245A.

9. Line Trigger Functional Check

a. Set:

CH 2 VOLTS/DIV	0.1 V (without a 10X probe attached)
CH 2 Input COUPLING	DC
A SEC/DIV	5 ms
TRIGGER MODE	AUTO LEVEL
TRIGGER SOURCE	LINE
TRIGGER CPLG	DC

b. Connect a 10X probe to the CH 2 input connector.

c. CHECK—that the display can be triggered in both ⌐ (positive-going) and ⌝ (negative-going) slopes.

d. Disconnect the test setup.

http://www.ebaman.com

HORIZONTAL

Equipment Required (See Table 4-1)

Time-mark generator
50 Ω BNC termination
50 Ω BNC coaxial cable

1. A and B Sweep Length

a. Set:

READOUT (Intensity)	For a viewable readout
A INTEN	For a viewable trace
VERTICAL MODE	CH 1
CH 1 and CH 2 Input COUPLING	DC
CH 1 VOLTS/DIV	0.5 V
Horizontal MODE	A
A SEC/DIV	2 ms
Horizontal POSITION	12 o'clock
A/B SELECT	A Trigger
TRIGGER MODE	AUTO LEVEL
TRIGGER SOURCE	VERT
TRIGGER CPLG	AC
TRIGGER SLOPE	⎍ (positive-going)
TRIGGER HOLDOFF	Min
TRIGGER LEVEL	12 o'clock
CLEAR MEAS'MT	Press to remove measurement cursors.
FOCUS	For best-defined display

b. Connect time-mark generator (TG 501) to the CH 1 input via a 50 Ω BNC coaxial cable and a 50 Ω BNC termination.

c. Set generator for 2 ms time markers.

d. CHECK—sweep length of the A trace is greater than 10 divisions.

e. Set:

Horizontal MODE	B
B SEC/DIV	1 ms
A/B SELECT	B Trigger
TRIGGER MODE	RUNS AFTER
|← OR DELAY Control	CCW to the lowest DELAY readout value
B INTEN	For a visible display

f. CHECK—the Delay Time readout is ?0.000 ms, and the B Sweep length is greater than 10 divisions.

2. Horizontal POSITION Range

a. Set:

Horizontal MODE	A
Horizontal POSITION	Fully CW

b. CHECK—that the start of trace positions past the center vertical graticule line.

c. Set Horizontal POSITION fully CCW.

d. CHECK—that the 11th time marker is positioned to the left of the center vertical graticule line.

3. VAR SEC/DIV Range

a. Set:

SEC/DIV	1 ms
SEC/DIV VAR	Fully CCW
Horizontal POSITION	12 o'clock

b. Set time-mark generator for 5 ms time markers.

http://www.ebaman.com

c. CHECK—the time-marker spacing is equal to or less than two divisions.

d. Set SEC/DIV VAR fully CW (calibrated detent).

4. Magnifier Registration

a. Set X10 MAG on.

b. Position a time marker to the center vertical graticule line.

c. Set X10 MAG off.

d. CHECK—for less than 0.5 division horizontal trace shift.

5. A and B Timing Accuracy and Linearity

a. Set A SEC/DIV to 20 ns.

b. Set time-mark generator for 20 ns time markers.

c. Position the time marker peaks vertically to the center horizontal graticule line (allows use of the minor division graticule markings as an aid in making the accuracy checks).

d. Position the second time marker to the second vertical graticule line.

e. Repeat the procedure for all other SEC/DIV settings. Use Table 4-3, Settings for Timing Accuracy Checks, for the SEC/DIV and time-mark generator settings.

f. Set SEC/DIV to 20 ns.

g. Set time-mark generator for 20 ns time markers.

h. Set:

Horizontal MODE	B
B INTEN	For a viewable display

i. Repeat the CHECK procedure for all the B SEC/DIV settings.

6. A and B Magnified Timing Accuracy and Linearity

a. Set time-mark generator for 5 ns time markers.

b. Set:

Horizontal MODE	A
A SEC/DIV	20 ns
Horizontal MODE	B
B SEC/DIV	20 ns
X10 MAG	On (for 2 ns/div sweep speed)
CH 1 VOLTS/DIV	0.5 V (use 0.2 V for the 5 ns time markers if necessary)

NOTE

In the following checks, for magnified SEC/DIV settings between 2 ns and 20 ns, set the fifth or sixth time marker from the start of the sweep to the second vertical graticule line. For the SEC/DIV settings between 50 ns and 50 ms (0.5 ms for B Sweep), position the leading edge of the second time marker to the second graticule line.

c. Align the rising edge of the fifth or sixth time marker from the start of the sweep with the second vertical graticule line (center the display vertically).

d. CHECK—that the rising edge of the fourth displayed time marker crosses the center horizontal graticule line at between 8.27 divisions and 8.73 divisions.

e. CHECK—the linearity is within 0.1 division over any 2.5 divisions of the center eight divisions. Exclude any portion of the sweep past the 100th magnified division.

f. Set SEC/DIV to 5 ns.

g. Align the correct time marker to the second vertical graticule line (see NOTE above).

h. CHECK—that the tenth displayed time marker is within 0.24 division (left or right) of the tenth graticule line.

http://www.ebaman.com

Table 4-3

Settings for Timing Accuracy Checks

SEC/DIV Setting		Time-Mark Setting	
Normal	X10 MAG	Normal	X10 MAG
20 ns	2 ns	20 ns	5 ns
50 ns	5 ns	50 ns	5 ns
0.1 µs	10 ns	0.1 ns	10 ns
0.2 µs	20 ns	0.2 µs	20 ns
0.5 µs	50 ns	0.5 µs	50 ns
1 µs	0.1 µs	1 µs	0.1 µs
2 µs	0.2 µs	2 µs	0.2 µs
5 µs	0.5 µs	5 µs	0.5 µs
10 µs	1 µs	10 µs	1 µs
20 µs	2 µs	20 µs	2 µs
50 µs	5 µs	50 µs	5 µs
0.1 ms	10 µs	0.1 ms	10 µs
0.2 ms	20 µs	0.2 ms	20 µs
0.5 ms	50 µs	0.5 ms	50 µs
1 ms	0.1 ms	1 ms	0.1 ms
2 ms	0.2 ms	2 ms	0.2 ms
5 ms	0.5 ms	5 ms	0.5 ms
A Sweep only			
10 ms	1 ms	10 ms	1 ms
20 ms	2 ms	20 ms	2 ms
50 ms	5 ms	50 ms	5 ms
0.1 s	10 ms	0.1 s	10 ms
0.2 s	20 ms	0.2 s	20 ms
0.5 s	50 ms	0.5 s	50 ms

http://www.ebanian.com

i. CHECK—that the linearity accuracy is 0.1 division over any two of the center eight divisions. (Exclude any portion of the sweep past the 100th magnified division for SEC/DIV settings of 5 ns through 20 ns.)

j. Repeat the timing and linearity checks for all SEC/DIV settings between 20 ns and 0.5 s. Use the SEC/DIV and Time Mark Generator X10 MAG settings given in Table 4-3.

k. Set:

Horizontal MODE	A
SEC/DIV	2 ns (with X10 MAG on)

l. Set time-mark generator for 5 ns time markers.

m. Repeat the magnified accuracy and linearity checks for the A Sweep at all SEC/DIV settings.

7. Delay Time Jitter

a. Set:

X10 MAG	Off
A SEC/DIV	1 ms
Horizontal MODE	ALT
B SEC/DIV	0.5 μs

b. Set the time-mark generator for 1 ms time markers.

c. Position the intensified dot to the leading edge of the 10th time marker to display the rising edge on the B Trace (using the |← OR DELAY control).

d. Set:

Horizontal MODE	B
B INTEN	Fully CW (maximum intensity)

d. CHECK—that the jitter on the leading edge does not exceed one division over a two-second interval. Disregard slow drift.

8. Delay Time Accuracy

a. Set:

Horizontal MODE	ALT
B SEC/DIV	10 μs
TRACE SEP	Fully CCW (maximum downward position)
CH 1 POSITION	To display both the ALT and the B Delayed Traces

b. Position the first time marker on the ALT trace to first vertical graticule line (left-most edge).

c. Position the intensified dot to full left position (counterclockwise rotation of the |← OR DELAY control).

d. CHECK—that the readout is ?0.000 ms.

e. Position the intensified zone to the second time marker and align the leading edge of the time marker displayed on the B Trace to the left-most (first) graticule line. Using the Readout Accuracy Limits given in Table 4-4, check the delay time accuracy.

f. Repeat the procedure for the third through 10th time markers.

Table 4-4
Delay Time Accuracy

Time Marker	Readout Accuracy Limits
1st	? 0.000 ms
2nd	0.975 ms to 1.025 ms
3rd	1.970 ms to 2.030 ms
4th	2.965 ms to 3.035 ms
5th	3.960 ms to 4.040 ms
6th	4.955 ms to 5.045 ms
7th	5.950 ms to 6.050 ms
8th	6.945 ms to 7.055 ms
9th	7.940 ms to 8.060 ms
10th	8.935 ms to 9.065 ms

http://www.ebaman.com

9. Delay Time Position Range

a. Set time-mark generator for 0.1 ms.

b. Set:

A SEC/DIV	1 ms
B SEC/DIV	5 μs
|← OR DELAY control	?0.000 ms

c. CHECK—that the intensified dot is positioned at or before the second time marker.

d. Turn the |← OR DELAY control clockwise until the delay readout stops increasing (largest number).

e. CHECK—that the intensified dot is positioned at or after the 99th time marker (located at a Delay Time of 9.9 ms).

f. Disconnect the time-mark generator from the 2245A.

10. X-Axis Gain Accuracy

a. Set:

Horizontal MODE	X-Y
VERTICAL MODE	CH 2 (CH 1 off)
CH 1 and CH 2 VOLTS/DIV	10 mV
CH 1 Input COUPLING	DC
CH 2 Input COUPLING	GND

b. Connect calibration generator Std Ampl output to the CH 1 and CH 2 inputs via a 50 Ω precision BNC coaxial cable and a BNC dual-input coupler.

c. Set calibration generator for Std Ampl output, 50 mV.

d. CHECK—X-Axis amplitude is between 4.85 and 5.15 horizontal divisions.

e. Disconnect calibration generator.

11. X-Y Phase Difference

a. Set:

HORIZONTAL MODE	A
VERTICAL MODE	CH 1 (CH 2 off)
CH 1 Input COUPLING	DC

b. Connect leveled sine-wave generator output to the CH 1 input via a 50 Ω BNC coaxial cable and a 50 Ω BNC termination.

c. Set leveled sine-wave generator output for six divisions of signal display amplitude at 50 kHz.

d. Set:

Horizontal MODE	X-Y
CH 1 Input COUPLING	GND

e. Position dot to graticule center.

f. Set CH 1 Input COUPLING to DC.

g. CHECK—ellipse opening at the center is 0.3 division or less, measured horizontally.

12. X-Axis Bandwidth

a. Set VERTICAL MODE to CH 2 (CH 1 off).

b. Set leveled sine-wave generator output frequency to 3 MHz.

c. CHECK—X-Axis display is 4.2 horizontal divisions or more.

d. Disconnect the test equipment from the 2245A.

http://www.ebaman.com

MEASUREMENT CURSORS

Equipment Required (See Table 4-1)

Time mark generator	Calibration generator
50Ω BNC coaxial cable	50 Ω BNC termination

1. |← SEC →| and |← 1/SEC →| Cursor Accuracy

a. Set:

READOUT (Intensity)	For a viewable readout
A INTEN	For a viewable trace
VERTICAL MODE	CH 1
CH 1 VOLTS/DIV	0.5 V
CH 1 and CH 2 Input COUPLING	DC
CH 2 INVERT	Off
SCOPE BW	Off
Horizontal MODE	A
A SEC/DIV	1 ms
A/B SELECT	A Trigger
TRIGGER MODE	AUTO LEVEL
TRIGGER CPLG	DC
TRIGGER SOURCE	VERT
TRIGGER SLOPE	⎍ (positive-going)
TRIGGER HOLDOFF	Min
FOCUS	For best defined display

b. Connect time-mark generator (TG 501) output via a 50 Ω BNC coaxial cable and a 50 Ω BNC termination to the CH 1 input.

c. Set time-mark generator for 1 ms time markers.

d. Position first time marker horizontally to the first vertical graticule line (left-most edge of the graticule).

e. Press TIME MEASUREMENTS button to display the |← SEC →| cursors.

f. Position the reference cursor to the first time marker and the delta cursor to the second time marker.

g. CHECK—that the readout is 0.975 ms to 1.025 ms.

h. Press the 1/TIME MEASUREMENTS button to display the |← 1/SEC →| cursors.

i. CHECK—that the readout is 0.975 kHz to 1.025 kHz.

j. Position the delta cursor to align with the 11th time mark.

k. CHECK—that the readout is 99.7 Hz to 100.7 Hz.

l. Press the TIME button to display the |← SEC →| cursors.

m. CHECK—that the readout is between 9.930 ms and 10.070 ms.

2. |← VOLTS →| Cursor Accuracy

a. Set:

CH 1 VOLTS/DIV	0.1 V
SEC/DIV	0.5 ms

b. Connect calibration generator (PG 506) output to the CH 1 input via a 50 Ω precision BNC coaxial cable.

c. Set the calibration generator to Std Ampl, 0.5 V.

d. Position bottom of the signal to the second horizontal graticule line from the bottom.

e. Press the CURSOR VOLTS button to display the |← VOLTS →| cursors.

f. Position the reference cursor to the bottom of the signal and the delta cursor to the top of the signal (both cursors move with the |← OR DELAY control).

g. CHECK—that the readout is between 0.495 V to 0.505 V.

h. Disconnect calibration generator.

http://www.ebaman.com

EXTERNAL Z-AXIS, PROBE ADJUST AND AUTO SETUP FUNCTIONS

Equipment Required (See Table 4-1)

Calibration Generator	BNC T-connector
Two 50 Ω BNC coaxial cable	Test ocsilloscope
50 Ω precision BNC coaxial cable	with a 10X probe

1. Check External Z-Axis Input

a. Set:

READOUT (Intensity)	For a viewable readout
A INTEN	For a viewable trace
VERTICAL MODE	CH 1
CH 1 VOLTS/DIV	1 V
CH 2 INVERT	Off
SCOPE BW	Off
CH 1 Input COUPLING	DC
Horizontal MODE	A
A SEC/DIV	0.5 ms
Horizontal POSITION	12 o'clock
A/B SELECT	A Trigger
TRIGGER MODE	AUTO LEVEL
TRIGGER CPLG	DC
TRIGGER SOURCE	VERT
TRIGGER SLOPE	⌐ (positive-going)
TRIGGER HOLDOFF	Min
FOCUS	For best defined display

b. Connect calibration generator (PG 506) Std Ampl output to the CH 1 and the EXT Z-AXIS inputs via a 50 Ω precision BNC coaxial cable, a BNC T-connector, and two 50 Ω BNC coaxial cables. Set generator to Std Ampl output, 5 V.

c. CHECK—waveform display intensity has noticeable modulation at 3.8 V or less.

d. Disconnect the test equipment from the 2245A.

2. PROBE ADJUST Output

a. Set:

CH 1 VOLTS/DIV	10 mV
SEC/DIV	0.2 ms

b. Connect a 10X probe to the CH 1 input connector and connect the probe tip to the 2245A PROBE ADJUST output. (When using Tektronix coded probes, the readout changes to .1 V.)

c. CHECK—For a 5-division vertical display of PROBE ADJUST square-wave signal (square-wave period is typically 1 ms, within 25%).

3. AUTO SETUP Functional Check

a. Set:

CH 1 COUPLING	GND
CH 1 VOLTS/DIV	2 mV
A SEC/DIV	20 ns

b. Press the AUTO SETUP button.

c. Check that the Probe Adjust waveform is stably displayed on the upper half of the crt.

http://www.ebaman.com

ADJUSTMENT PROCEDURE

INTRODUCTION

IMPORTANT—PLEASE READ BEFORE USING THIS PROCEDURE

PURPOSE

This Adjustment Procedure returns the instrument to conformance with the Performance Requirements as listed in the specification tables in Section 1. Adjustments should be done only after the checks in the Performance Check Procedure (Section 4) have indicated a need for readjustment of the instrument.

TEST EQUIPMENT REQUIRED

The test equipment listed in Table 4–1 (Section 4) is required to complete the Adjustment Procedure in this section and the Performance Check Procedure in Section 4. Test equipment specifications described in Table 4–1 are the minimum necessary to provide accurate results; you must use equipment that meets or exceeds these specifications. Detailed operating instructions for test equipment are not given in this procedure; if more operating information is required, refer to the appropriate test equipment instruction manual.

When equipment other than that recommended is used, control settings given for the test setup may have to be changed. If the exact item of equipment given as an example in Table 4–1 is not available, first check the "Use" column to verify use of the item. Then use the "Minimum Specification" column to decide whether other available test equipment can be used.

LIMITS AND TOLERANCES

The limits and tolerances stated in this procedure are instrument specifications only if they are listed in the Performance Requirements column of Table 1–1, Electrical Characteristics. Tolerances given apply only to the instrument under adjustment and do not include test equipment error. Adjustments must be made at an ambient temperature between +20°C and +30°C, and the instrument must have had a warm–up period of at least 20 minutes.

PARTIAL PROCEDURES

This procedure is divided into subsections to permit adjustment of individual sections of the instrument (except the Power Supply) whenever a complete readjustment is not required. For example, if only the Vertical section fails to meet the Performance Requirements (or has had repairs made or components replaced), it can be readjusted with little or no effect on other sections of the instrument. However, if the Power Supply section has undergone repairs or adjustments that change the absolute value of any of the supply voltages, a complete readjustment of the instrument is required.

At the beginning of each subsection is a list of the initial front–panel control settings required to prepare the instrument for Step 1 in that subsection. Each succeeding step within a subsection should then be done completely and in the sequence given to ensure that control settings will be correct for steps that follow.

INTERNAL ADJUSTMENTS AND ADJUSTMENT INTERACTION

Do not preset any internal controls, since that may make it necessary to recheck or readjust a major portion of the instrument when only a partial check or adjustment might otherwise have been required. To avoid unnecessary checks and adjustments, change an internal control setting only when a Performance Characteristic cannot be met with the original setting. When independently changing the setting of any internal control, always check Table 5–1 for possible interacting adjustments that might be required.

http://www.ebamanuals.com

Table 5-1

Adjustment Interactions

| ADJUSTMENTS OR REPLACEMENTS MADE | ADJUSTMENTS AFFECTED | | |

The use of Table 5-1 is particularly important if only a partial procedure is done or if a circuit requires readjustment due to a component replacement. To use this table, first find the adjustment that was made (extreme left column). Then move to the right, across the row, until you come to a darkened square. From the darkened square, move up the table to find the affected adjustment at the heading of that column. Check the accuracy of this adjustment by using the Performance Check Procedure in Section 4. Then, if necessary, make a readjustment.

Specific interactions are called out within some adjustment steps to indicate that the adjustments must be repeated until no further improvement is noted.

PREPARATION FOR ADJUSTMENT

It is necessary to remove the cabinet to do the Adjustment Procedure. See the cabinet removal instructions in the Maintenance section of this manual.

All test equipment items required to do the complete Adjustment Procedure are described in Table 4-1 at the beginning of Section 4, Performance Check Procedure. The specific items of equipment needed to do each subsection in this procedure are listed at the beginning of that subsection.

Connect the test equipment and the 2245A to an appropriate ac-power source and allow 20 minutes warmup before making any adjustments.

INDEX TO ADJUSTMENT PROCEDURE

Power Supply, Display, and Z-Axis

1. Power Supply Levels (R2252) 5-4
2. Grid Bias (R2719) 5-5
3. Astigmatism (R2788) 5-5
4. Trace Rotation (Front Panel) 5-5
5. Geometry (R2784) 5-5
6. Z-Axis Response (C2704) 5-5
7. Readout Jitter (R724) 5-6

Vertical

1. Vertical Output Gain (R703) and Readout Vertical Centering (R260) 5-7
2. Ch 1 Step Balance (R12) 5-7
3. Ch 2 Step Balance (R22) 5-8
4. Ch 3 Step Balance (R141) 5-8
5. Ch 4 Step Balance (R161) 5-8
6. Ch 1 MF/LF Gain (R13) and Compensation (C1) 5-8
7. Ch 1 Input Capacitance (C114) 5-8
8. Ch 1 Input Compensation X10 (C11) 5-8
9. Ch 1 Input Compensation X100 (C10) ... 5-8
10. Ch 1 Gain (R211) 5-8
11. Ch 2 MF/LF Gain (R23) and Compensation (C2) 5-8
12. Ch 2 Input Capacitance (C124) 5-9
13. Ch 2 Input Compensation X10 (C21) 5-9
14. Ch 2 Input Compensation X100 (C20) ... 5-9
15. Ch 2 Gain (R221) 5-9
16. Ch 3 MF/LF Compensation (C134) 5-9
17. Ch 3 Gain (R231) 5-9
18. Ch 4 MF/LF Compensation (C154) 5-9
19. Ch 4 Gain (R241) 5-9
20. Delay-line HF Compensation (R272, R273, R275, C274, C273) 5-10
21. Ch 3 HF Compensation (C138) 5-10
22. Ch 4 HF Compensation (C158) 5-10
23. Ch 1 and Ch 2 Bandwidth Check 5-10
24. Ch 3 and Ch 4 Bandwidth Check 5-11

Horizontal

1. Horizontal X1 Gain (Timing) (R826) 5-12
2. Horizontal X10 Gain (Timing) (R825) 5-12
3. Readout Horizontal Gain (R823) and Mag Registration (R809) 5-12
4. A 20 ns Timing (C314) 5-13
5. B 20 ns Timing (C329) 5-13
6. 2 ns Timing (C807, C814) 5-13
7. X Gain (R827) 5-13

Self Characterization

1. Self Characterization 5-15

http://www.tbamanuals.com

POWER SUPPLY, DISPLAY, AND Z-AXIS

Equipment Required (See Table 4-1):

Digital multimeter (DMM)	50 Ω coaxial cable
Leveled sine-wave generator	50 Ω termination
Test oscilloscope w/10X probe	

See **ADJUSTMENT LOCATIONS** *at the back of this manual for test points and adjustment locations.*

INITIAL CONTROL SETTINGS

Set:

VERTICAL MODE	CH 1
CH 1 COUPLING	DC
VOLTS/DIV	0.1 V
VERTICAL POSITION Controls	12 o'clock
HORIZONTAL MODE	A
A/B SELECT	A
SEC/DIV	0.1 ms
TRIGGER LEVEL	12 o'clock
HOLDOFF	Min (CCW)
SLOPE	⌐
TRIGGER MODE	AUTO LEVEL
TRIGGER SOURCE	CH 1
TRIGGER COUPLING	DC
MEASUREMENTS	OFF
A INTEN	10 o'clock
READOUT	12 o'clock
FOCUS	For well-defined display
SCALE ILLUM	Fully CCW

PROCEDURE

1. Power Supply DC Levels (R2252)

a. Connect a digital multimeter (DMM) negative lead to chassis ground. Connect the positive lead to the first test point listed in Table 5-2 (all test points on J1204, Main board).

b. CHECK—Voltage reading is within the range given in Table 5-2.

c. Move DMM positive lead to each of the other supply voltages in Table 5-2 and check that voltage ranges are within limits.

NOTE

If all supply voltages are within the limits given in Table 5-2, it is not necessary to adjust the power supply. If voltages are not within limits, you will have to adjust the +7.5 V supply, recheck the other voltages, and continue with a complete readjustment of the instrument.

d. Connect a digital multimeter (DMM) negative lead to chassis ground and positive lead to +7.5 V test point (J2104-8).

e. ADJUST—+7.5 V Adj (R2252) for +7.5 V and check that all supply voltages in Table 5-2 are within limits. The +7.5 V Adjustment is accessible through the right side frame.

f. Disconnect digital multimeter.

http://www.ebaman.com

Table 5-2

Power Supply Voltage Limits

Nominal Supply Voltage	Test Point (+ lead)	Limits (0 °C to 50 °C) Min	Max
+130 V	J1204-11	+127	+135
+58 V	J1204-10	+55.7	+59.2
+15 V	J1204-7	+14.6	+15.6
+7.5 V	J1204-8	+7.4	+7.6
+5.0 V	J1204-1,2	+5.0	+5.3
-5.0 V	J1204-5	-5.1	-5.4
-7.5 V	J1204-9	-7.4	-7.8
-15 V	J1204-6	-15.5	-16.6

2. Grid Bias (R2719)

a. Set:

HORIZ MODE	X-Y
CH 1 VOLTS/DIV	5 V
CH 1 COUPLING	GND
SCOPE BW	On
A INTEN	Fully CCW (off)
B INTEN	Fully CCW (off)
READOUT (Intensity)	Fully CCW (off)
SCALE ILLUM	Fully CCW (off)

b. ADJUST—Grid Bias (R2719) for a visible dot.

c. Position dot just off center screen with vertical or horizontal POSITION controls.

d. Set FOCUS control for a well-defined dot.

e. ADJUST—Grid Bias (R2719) so that dot is no longer visible.

3. Astigmatism (R2788)

a. Set:

HORIZ MODE	A
A INTEN	10 o'clock
READOUT (Intensity)	12 o'clock
SEC/DIV	5 μs
VAR SEC/DIV	Detent (fully CW)
CH 1 VOLTS/DIV	10 mV
CH 1 COUPLING	DC

b. Connect leveled sine-wave generator output to the CH 1 input connector via a 50 Ω BNC coaxial cable and a 50 Ω BNC termination. Set for a 5-division display at 50 kHz.

c. ADJUST—Astigmatism (R2788) together with front-panel FOCUS control for best overall resolution of the sine-wave display.

d. DISCONNECT—Leveled sine-wave generator.

4. Trace Rotation

a. Set CH 1 COUPLING to GND.

b. Position trace to center horizontal graticule line and beginning of trace to first vertical graticule line.

c. ADJUST—TRACE ROTATION (front panel) to align trace parallel with center horizontal graticule line.

5. Geometry (R2784)

a. Set:

CH 1 VOLTS/DIV	0.1 V
CH 1 COUPLING	DC
SEC/DIV	50 μs
READOUT (intensity)	Fully CCW (off)

b. Connect the time-mark generator to CH 1 via a 50 Ω cable and a 50 Ω termination. Display 10 μs time markers.

c. Position base trace below bottom graticule line.

d. ADJUST—Geometry (R2784) for minimum bowing of time markers across the full graticule area. Vertical bowing of time marker across screen should be no more than 0.1 division.

e. Disconnect time-mark generator.

6. Z-Axis Response (C2704)

a. Set:

READOUT (Intensity)	12 o'clock
SEC/DIV	5 μs
READOUT (Intensity)	Fully CCW (off)

http://www.ebaman.com

b. Connect test oscilloscope with 10X probe to R2718 (either side).

c. ADJUST—Z-Axis Response (C2704) for flattest response possible of the signal displayed by the test scope.

d. Disconnect test oscilloscope.

7. Readout Jitter (R724)

a. Set:

READOUT (intensity)	12 o'clock
SEC/DIV	10 ms
CH 1 COUPLING	DC
A INTEN	Fully CCW (off)

b. Connect calibration generator to CH 1 input via 50 Ω precision coaxial cable. Set generator for STD AMPL and 1 volt.

c. ADJUST—Readout Jitter (R724) for the least amount of jitter or sway in the readout.

d. Disconnect calibration generator.

http://www.ebaman.com

VERTICAL

Equipment Required (See Table 4-1):

Calibration generator (PG 506)
Leveled sine-wave generator
50 Ω precision coaxial cable
50 Ω termination
Precision normalizer (20 pF)

See **ADJUSTMENT LOCATIONS** *at the back of this manual for test points and adjustment locations.*

INITIAL CONTROL SETTINGS

Set:

VERTICAL MODE	CH 1 and CH 2
INPUT COUPLING	DC
VOLTS/DIV	0.1 V
VERTICAL POSITION Controls	12 o'clock
HORIZONTAL MODE	A
A/B SELECT	A
SEC/DIV	0.1 ms
TRIGGER LEVEL	12 o'clock
HOLDOFF	Min (CCW)
SLOPE	⌐
TRIGGER MODE	AUTO LEVEL
TRIGGER SOURCE	VERT
TRIGGER COUPLING	DC
MEASUREMENTS	OFF
A INTEN	10 o'clock
READOUT	12 o'clock
FOCUS	For well-defined display
SCALE ILLUM	Fully CCW

PROCEDURE

1. Vertical Output Gain (R703) and Readout Vertical Centering (R260)

a. Run ADJUST VERTICAL OUTPUT routine.

Select the SERVICE MENU by pressing the CH 1 and CHOP/ALT VERTICAL MODE buttons at the same time. Press the ADD (down-arrow button) four times to underline INTERNAL SETTINGS MENU, then press CH 2 (SELECT) button. Press ADD (down-arrow) button twice to underline ADJUST VERTICAL OUTPUT, then press CH 2 (RUN) button.

http://www.ebamanuals.com

NOTE

For this adjustment, the 2245A must be placed in the "normal" operating position to avoid incorrect alignment due to the effects of the earth's magnetic field.

b. ADJUST—Vertical Output Gain (R703) and Readout Vertical Centering (R260) alternately until dashed lines produced by the diagnostics are aligned with dotted lines on the graticule.

c. To end the ADJUST VERTICAL OUTPUT routine, either press the CLEAR MEAS'MT button or press CH 1 (END) and then press CH 4 (QUIT).

2. CH 1 Step Balance (R12)

a. Set:

VERTICAL MODE	CH 1 (CH 2 off)
CH 1 COUPLING	GND
SCOPE BW	On

b. Position trace to center horizontal graticule line.

c. ADJUST—CH 1 Step Balance (R12) so the trace does not move vertically while switching CH 1 VOLTS/DIV switch from 10 mV to 50 mV.

3. CH 2 Step Balance (R22)

a. Set:

VERTICAL MODE	CH 2 (CH 1 off)
CH 2 COUPLING	GND

b. Position trace to center of graticule.

c. ADJUST—CH 2 Step Balance (R22) so that trace does not move vertically while switching CH 2 VOLTS/DIV switch from 10 mV to 50 mV.

4. CH 3 Step Balance (R141)

a. Set VERTICAL MODE to CH 3 (CH 2 off).

b. Position trace to center of graticule.

c. ADJUST—CH 3 Step Balance (R141) so that trace does not move vertically while switching CH 3 VOLTS/DIV switch from 0.1 V to 0.5 V.

5. CH 4 Step Balance (R161)

a. Set VERTICAL MODE to CH 4 (CH 3 off).

b. Position trace to center of graticule.

c. ADJUST—CH 4 Step Balance (R161) so that trace does not move vertically while switching CH 4 VOLTS/DIV switch from 0.1 V to 0.5 V.

6. CH 1 MF/LF Gain (R13) and Compensation (C1)

a. Set:

VERTICAL MODE	CH 1 (CH 4 off)
CH 1 VOLTS/DIV	50 mV
CH 1 COUPLING	DC
SEC/DIV	50 μs

b. Connect calibration generator to CH 1 input via 50 Ω BNC coaxial cable and 50 Ω BNC termination. Set generator for High Amplitude. Set Period to 10 kHz and adjust Pulse Amplitude for a 5-division display.

c. ADJUST—CH 1 MF/LF Gain (R13) and Compensation (C1) for the flattest response.

7. CH 1 Input Capacitance (C114)

a. Set:

CH 1 VOLTS/DIV	10 mV
SEC/DIV	0.2 ms

b. Add precision normalizer between termination and CH 1 input connector. Set calibration generator Period to 1 kHz and adjust Pulse Amplitude for a 5-division display.

c. ADJUST—CH 1 Input Capacitance (C114) for best flat top.

d. Remove precision normalizer from the input cable.

8. CH 1 Input Compensation X10 (C11)

a. Set:

CH 1 VOLTS/DIV	0.1 V
SEC/DIV	50 μs

b. Set calibration generator Period to 10 kHz and adjust Pulse Amplitude for a 5-division display.

c. ADJUST—CH 1 Input Compensation X10 (C11) for flattest response.

9. CH 1 Input Compensation X100 (C10)

a. Set CH 1 VOLTS/DIV to 1 V.

b. Set calibration generator amplitude for a 5-division display.

c. ADJUST—CH 1 Input Compensation X100 (C10) for flattest response.

10. CH 1 Gain (R211)

a. Set calibration generator to Standard Amplitude and Amplitude to 50 mV. Remove 50 Ω termination from input cable.

b. Set:

CH 1 VOLTS/DIV	10 mV
SEC/DIV	0.2 ms

c. ADJUST—CH 1 Gain (R211) for exactly 5 divisions display amplitude.

11. CH 2 MF/LF Gain (R23) and Compensation (C2)

a. Set:

VERTICAL MODE	CH 2 (CH 1 off)
CH 2 VOLTS/DIV	50 mV
CH 2 COUPLING	DC
SEC/DIV	50 μs

b. Move calibration generator signal to CH 2 input. Add 50 Ω termination.

http://www.ebaman.com

c. Set calibration generator for High Amplitude. Set Period to 10 kHz and adjust Pulse Amplitude for a 5-division display.

d. ADJUST—CH 2 MF/LF Gain (R23) and Compensation (C2) for flattest response.

12. CH 2 Input Capacitance (C124)

a. Set:

CH 2 VOLTS/DIV	10 mV
SEC/DIV	0.2 ms

b. Add precision normalizer between termination and CH 2 input connector. Set calibration generator Period to 1 kHz and adjust Pulse Amplitude for a 5-division display.

c. ADJUST—CH 1 Input Capacitance (C124) for best flat top.

d. Remove precision normalizer from the input cable.

13. CH 2 Input Compensation X10 (C21)

a. Set:

CH 2 VOLTS/DIV	0.1 V
SEC/DIV	50 μs

b. Set calibration generator Period to 10 kHz and adjust Pulse amplitude for a 5-division display.

c. ADJUST—CH 2 Input Compensation X10 (C21) for flattest response.

14. CH 2 Input Compensation X100 (C20)

a. Set CH 2 VOLTS/DIV to 1 V.

b. Set calibration generator amplitude for a 5-division display.

c. ADJUST—CH 2 Input Compensation X100 (C20) for flattest response.

15. CH 2 Gain (R221)

a. Set calibration generator to Standard Amplitude and Amplitude to 50 mV. Remove 50 Ω termination from the input cable.

b. Set:

CH 2 VOLTS/DIV	10 mV
SEC/DIV	0.2 ms

c. ADJUST—CH 2 Gain (R221) for exactly 5 divisions display amplitude.

16. CH 3 MF/LF Compensation (C134)

a. Set:

VERTICAL MODE	CH 3 (CH 2 off)
CH 3 VOLTS/DIV	0.1 V
SEC/DIV	50 μs

b. Move calibration generator signal to CH 3 input. Add 50 Ω termination.

c. Set calibration generator for High Amplitude. Set Period to 10 kHz and adjust Pulse Amplitude for a 5-division display.

d. ADJUST—CH 3 MF/LF Compensation (C134) for flattest response.

17. CH 3 Gain (R231)

a. Set:

CH 3 VOLTS/DIV	0.5 V
SEC/DIV	2 ms

b. Set calibration generator for Standard Amplitude. Set amplitude to 2 V. Remove 50 Ω termination.

c. ADJUST—CH 3 Gain (R231) for exactly 4 divisions display amplitude.

18. CH 4 MF/LF Compensation (C154)

a. Set:

VERTICAL MODE	CH 4 (CH 3 off)
CH 4 VOLTS/DIV	0.1 V
SEC/DIV	50 μs

b. Move calibration generator signal to CH 4 input. Add 50 Ω termination.

c. Set calibration generator for High Amplitude. Set Period to 10 kHz and adjust Pulse Amplitude for a 5-division display.

d. ADJUST—CH 4 MF/LF Compensation (C154) for flattest response.

19. CH 4 Gain (R241)

a. Set:

CH 4 VOLTS/DIV	0.5 V
SEC/DIV	0.2 ms

b. Set calibration generator for Standard Amplitude. Set amplitude to 2 V. Remove 50 Ω termination.

http://www.ebamanc

c. ADJUST—CH 4 Gain (R241) for exactly 4 divisions display amplitude.

d. Disconnect calibration generator from CH 4.

e. Run the SELF CAL MEASUREMENTS routine (see "Self Characterization" near the end of this section).

20. Delay-Line HF Compensation (R272, R273, R275, C274, C273)

a. Set

VERTICAL MODE	CH 1 (CH 4 off)
CH 1 VOLTS/DIV	50 mV
SEC/DIV	20 ns
SCOPE BW	Off

b. Connect calibration generator positive-going Fast Rise Output to the CH 1 input via a 50 Ω precision coaxial cable and a 50 Ω termination.

c. Set calibration generator for Fast Rise at 1 MHz and adjust Pulse Amplitude for a 5-division display.

d. Position the top of display to the center horizontal graticule line.

e. ADJUST—Delay-Line HF Compensations (R272, R273, R275) for flattest response and (C274, C273) for sharpest front corner with minimum overshoot. Figure 5-1 shows the area of the waveform affected by each adjustment.

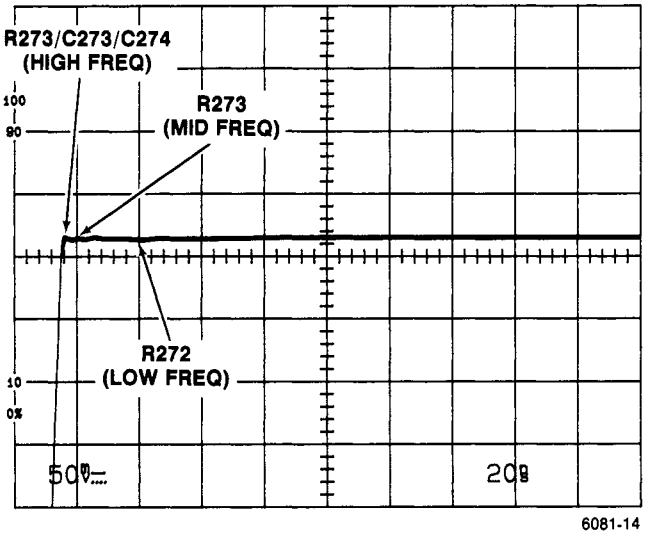

Figure 5-1. Areas of waveform affected by HF compensation adjustments.

21. CH 3 HF Compensation (C138)

a. Set:

VERTICAL MODE	CH 3 (CH 1 off)
CH 3 VOLTS/DIV	0.5 V

b. Move calibration generator signal to CH 3. Set Pulse Amplitude to maximum to obtain about a 2.5-division display.

c. ADJUST—CH 3 HF Compensation (C138) for flattest response.

22. CH 4 HF Compensation (C158)

a. Set:

VERTICAL MODE	CH 4 (CH 3 off)
CH 4 VOLTS/DIV	0.5 V

b. Move calibration generator signal to CH 4.

c. ADJUST—CH 4 HF Compensation (C158) for flattest response.

d. Disconnect calibration generator.

23. CH 1 and CH 2 Bandwidth Check

a. Set:

VERTICAL MODE	CH 1 (CH 4 off)
CH 1 VOLTS/DIV	2 mV
SEC/DIV	0.1 ms

b. Connect leveled sine-wave generator output to the CH 1 input via a 50 Ω precision coaxial cable and a 50 Ω BNC termination.

c. Set leveled sine-wave generator output for a six-division signal amplitude at 50 kHz.

d. Set the generator Frequency Range and Frequency Variable controls for an 80 MHz output signal.

e. CHECK—the displayed signal amplitude does not drop below 4.2 divisions as the frequency is increased to 90 MHz.

f. Repeat the frequency setup and CHECK procedure for VOLTS/DIV settings of 5 mV through 1 V, except perform CHECK at 100 MHz.

NOTE

When checking bandwidth at a VOLTS/DIV setting of 1 V, use 5 divisions at 50 kHz and check for 3.5 divisions or more at 100 MHz.

http://www.ebaman.com

g. Move the test signal to the CH 2 input.

h. Set

VERTICAL MODE	CH 2 (CH 1 off)
CH 2 VOLTS/DIV	2 mV

i. Repeat the complete bandwidth check procedure for Channel 2.

24. CH 3 and CH 4 Bandwidth Check

a. Set:

VERTICAL MODE	CH 3 (CH 2 off)
CH 3 VOLTS/DIV	0.1 V

b. Move the leveled sine-wave generator signal to the CH 3 input.

c. Set the generator output for a six-division signal display at 50 kHz.

d. Set the generator Frequency Range and Frequency Variable controls for a 90 MHz output frequency.

e. CHECK—signal display amplitude does not drop below 4.2 divisions as the frequency is increased to 100 MHz.

f. Repeat the procedure for 0.5 VOLTS/DIV setting.

g. Move the test signal to the CH 4 input.

h. Set:

VERTICAL MODE	CH 4 (CH 3 off)
CH 4 VOLTS/DIV	0.1 V

i. Repeat the procedure for CH 4.

j. Disconnect leveled sine-wave generator.

http://www.ebaman.com

HORIZONTAL

Equipment Required (See Table 4-1):

Time-mark generator	50 Ω coaxial cable
Calibration generator	50 Ω termination

See ADJUSTMENT LOCATIONS *at the back of this manual for test points and adjustment locations.*

INITIAL CONTROL SETTINGS

Set:

VERTICAL MODE	CH 1 and CH 2 (CH 4 off)
INPUT COUPLING	DC
VOLTS/DIV	0.1 V
VERTICAL POSITION Controls	12 o'clock
HORIZONTAL MODE	A
A/B SELECT	A
SEC/DIV	0.1 ms
TRIGGER LEVEL	12 o'clock
HOLDOFF	Min (CCW)
SLOPE	⎍
TRIGGER MODE	AUTO LEVEL
TRIGGER SOURCE	VERT
TRIGGER COUPLING	DC
MEASUREMENTS	OFF
A INTEN	10 o'clock
READOUT	12 o'clock
FOCUS	For well-defined display
SCALE ILLUM	Fully CCW

PROCEDURE

1. Horizontal X1 Gain (Timing) (R826)

a. Set:

VERTICAL MODE	CH 1 (CH 2 off)
CH 1 VOLTS/DIV	0.5 V

b. Connect time-mark generator to CH 1 input via 50 Ω BNC coaxial cable and 50 Ω BNC termination. Set generator for 0.1 ms time markers.

c. Position display to center of screen.

d. ADJUST—Horizontal 1X Gain (R826) for one time marker per division over the center 8 divisions.

2. Horizontal X10 Gain (Timing) (R825)

a. Set X10 MAG to ON.

b. Set time-mark generator for 10 μs time markers.

c. Position display to center of screen.

d. ADJUST—Horizontal X10 Gain (R825) for one time marker per division over the center 8 divisions.

3. Readout Horizontal Gain (R823) and MAG Registration (R809)

a. Set:

X10 MAG	Off
SEC/DIV	1 ms
A INTEN	CCW (off)

b. Press the TIME MEASUREMENTS button.

c. Rotate the ⇤ OR DELAY control counterclockwise and the ⇥ control clockwise until cursors stop moving.

http://www.ebaman.com

d. ADJUST—MAG Registration (R809) and Readout Horizontal Gain (R823) alternately until the reference cursor lines up exactly with the left graticule line and the delta cursor lines up exactly with the right graticule line.

e. Press CLEAR MEAS'MT button to remove cursors from screen.

f. Set:

SEC/DIV	20 μs
A INTEN	10 o'clock

g. Set time-mark generator for 0.1 ms time markers.

h. Position rising edge of middle time marker to the center vertical graticule line.

i. Set X10 MAG to On.

j. INTERACTION—between MAG Registration and horizontal positioning of the time cursors. Check for less than 0.5 division shift of time-marker rising edge between MAG off and MAG on. If not within 0.5 division, recheck the accuracy of R809 and R823 adjustments; readjust if necessary.

4. A 20 ns Timing (C314)

a. Set:

X10 MAG	Off
SEC/DIV	20 ns

b. Set time-mark generator for 20 ns time markers.

c. ADJUST—A 20 ns Timing (C314) for one time marker per division over the center 8 divisions.

5. B 20 ns Timing (C329)

a. Set:

HORIZONTAL MODE	B
B SEC/DIV	20 ns
B INTEN	10 o'clock

b. Set the time-mark generator for 20 ns time markers.

c. ADJUST—B 20 ns Timing (C329) for one time marker per division over the center 8 divisions.

6. 2 ns Timing (C807, C814)

a. Set:

HORIZONTAL MODE	A
X10 MAG	On
CH 1	50 mV
CH 1 COUPLING	AC

b. Set time-mark generator for 5 ns time marks.

c. ADJUST—2 ns Timing (C807, C814) for 1 cycle for each 2.5 divisions over the center 8 divisions. See Figure 5-2. Use the vertical transition of the sine wave instead of the peaks for better accuracy.

d. INTERACTION—between C807 and C814. Readjust as necessary to make the timing at 2.5, 5, and 7.5 divisions within +/-0.2 division (1 minor division).

e. Disconnect time-mark generator.

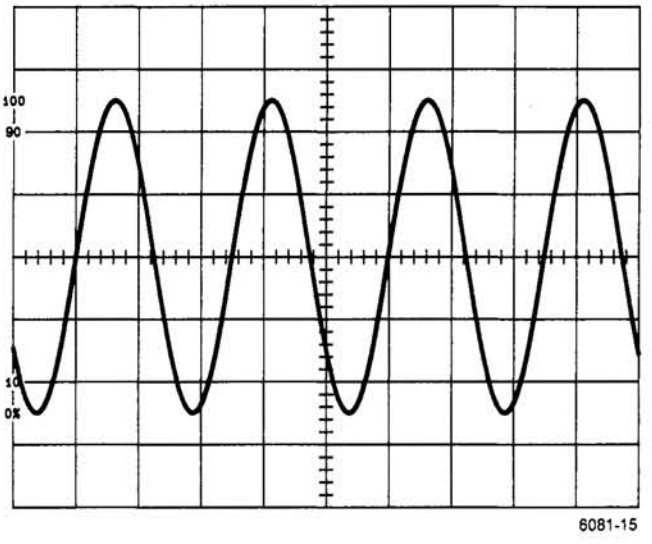

Figure 5-2. 2 ns Timing.

7. X Gain (R827)

a. Set:

X10 MAG	Off
Horizontal MODE	X-Y
VERTICAL MODE	CH 2 (CH 1 off)
CH 1 VOLTS/DIV	10 mV

http://www.tobaman.com

b. Connect calibration generator to CH 1 input via a 50 Ω coaxial cable. Set generator for Standard Amplitude. Set Amplitude to 50 mV.

c. ADJUST—X Gain (R827) for 5 divisions of horizontal signal.

d. Disconnect calibration generator.

http://www.ebaman.com

SELF CHARACTERIZATION

PROCEDURE

1. Self Characterization

a. Run the SELF CAL MEASUREMENTS routine. Press both the CH 1 and CHOP/ALT VERTICAL MODE buttons to display the SERVICE MENU. Press ADD (down-arrow) button three times to underline SELF CAL MEASUREMENTS. Press CH 2 (RUN) to start the routine.

b. Run MAKE FACTORY SETTINGS routine. Press ADD (down-arrow) to select INTERNAL SETTINGS MENU. Press CH 2 (SELECT) and then press ADD (down-arrow) to underline MAKE FACTORY SETTINGS. Press CH 2 (RUN) to start the routine. When done, press CH 4 (QUIT) or CLEAR MEAS'MT to return to normal oscilloscope mode.

http://www.ebaman.com

MAINTENANCE

This section of the manual contains information on static-sensitive components, preventive maintenance, troubleshooting, and corrective maintenance. General information regarding the care and handling of semiconductor devices is provided in "Static-Sensitive Components," and routine cleaning and inspection are covered in "Preventive Maintenance." Internal testing capabilities and diagnostic test routines are included in the "Troubleshooting" subsection. The "Corrective Maintenance" part of this section includes circuit board removal procedures, maintenance aids, and soldering techniques.

STATIC-SENSITIVE COMPONENTS

The following precautions apply when performing any maintenance involving internal access to the instrument.

CAUTION

Static discharge can damage any semiconductor component in this instrument.

This instrument contains electrical components that are susceptible to damage from static discharge. Table 6-1 lists the relative susceptibility of various classes of semiconductors. Static voltages of 1 kV to 30 kV are common in unprotected environments.

When performing maintenance, observe the following precautions to avoid component damage:

1. Minimize handling of static-sensitive components.

2. Transport and store static-sensitive components or assemblies in their original containers or on a metal rail. Label any package that contains static-sensitive components or assemblies.

3. Discharge the static voltage from your body by wearing a grounded antistatic wrist strap while handling these components. Servicing static-sensitive components or assemblies should be performed only at a static-free work station by qualified service personnel.

Table 6-1

Relative Susceptibility to Static-Discharge Damage

Semiconductor Classes	Relative Susceptibility Levels [a]
MOS or CMOS microcircuits or discretes, or linear microcircuits with MOS inputs (Most Sensitive)	1
ECL	2
Schottky signal diodes	3
Schottky TTL	4
High-frequency bipolar transistors	5
JFET	6
Linear microcircuits	7
Low-power Schottky TTL	8
TTL (Least Sensitive)	9

[a] Voltage equivalent for levels (voltage discharged from a 100-pF capacitor through a resistance of 100 Ω):

1 = 100 to 500 V
2 = 200 to 500 V
3 = 250 V
4 = 500 V
5 = 400 to 600 V
6 = 600 to 800 V
7 = 400 to 1000 V (est)
8 = 900 V
9 = 1200 V

4. Keep anything capable of generating or holding a static charge off the work station surface.

http://www.ebaman.com

5. Keep the component leads shorted together whenever possible.

6. Pick up components by their bodies, never by their leads.

7. Do not slide the components over any surface.

8. Avoid handling components in areas that have a floor or work-surface covering capable of generating a static charge.

9. Use a soldering iron that is connected to earth ground.

10. Use only approved antistatic, vacuum-type desoldering tools for component removal.

PREVENTIVE MAINTENANCE

INTRODUCTION

Preventive maintenance consists of cleaning, inspection, and checking instrument performance. Preventive maintenance on a regular basis may prevent instrument malfunction and improve instrument reliability. The required frequency of maintenance depends on the severity of the environment in which the instrument is used. A good time to do preventive maintenance is just before instrument adjustment.

http://www.ebaman.com

INSPECTION AND CLEANING

Inspect and clean the 2245A as often as operating conditions require. Accumulation of dirt in the instrument can cause overheating and component breakdown. Dirt on components acts as an insulating blanket, preventing efficient heat dissipation. It also provides an electrical conduction path that could result in instrument failure, especially under high-humidity conditions

CAUTION

Do not use chemical cleaning agents which might damage the plastics used in this instrument. Use a nonresidue-type cleaner, preferably isopropyl alcohol or a solution of 1% mild detergent and 99% water. Before using any other type of cleaner, consult your Tektronix Service Center or representative.

Exterior

INSPECTION. Inspect the external portions of the instrument for damage, wear, and missing parts; use Table 6-2 as a guide. Instruments that appear to have been dropped or otherwise abused should be checked thoroughly to verify correct operation and performance. Deficiencies that could cause personal injury or could lead to further instrument damage should be repaired immediately.

CAUTION

Do not allow moisture to get inside the instrument during external cleaning. Use only enough liquid to dampen the cloth or applicator.

CLEANING. Loose dust on the outside of the instrument can be removed with a soft cloth or small soft-bristle brush. The brush is particularly useful on and around the controls and connectors. Remove remaining dirt with a soft cloth dampened in a mild detergent-and-water solution. Do not use abrasive cleaners.

Clean the light filters and the crt face with a soft lint-free cloth dampened with either isopropyl alcohol or a mild detergent-and-water solution.

Interior

To clean or inspect the inside of the instrument, first refer to the Removal and Replacement Instructions in the Corrective Maintenance part of this section.

Table 6-2
External Inspection Checklist

Item	Inspect For	Repair Action
Cabinet, Front Panel, and Cover	Cracks, scratches, deformations, damaged hardware or gaskets.	Touch up paint scratches and replace defective components.
Front-panel controls	Missing, damaged, or loose knobs, buttons, and controls.	Repair or replace missing or defective items.
Connectors	Broken shells, cracked insulation, and deformed contacts. Dirt in connectors.	Replace defective parts. Clean or wash out dirt.
Carrying Handle	Correct operation.	Replace defective parts.
Accessories	Missing items or parts of items, bent pins, broken or frayed cables, and damaged connectors.	Replace damaged or missing items, frayed cables, and defective parts.

Table 6-3
Internal Inspection Checklist

http://www.ebaman.com

Item	Inspect For	Repair Action
Circuit Boards	Loose, broken, or corroded solder connections. Burned circuit boards. Burned, broken, or cracked circuit-run plating.	Clean solder corrosion with an eraser and flush with isopropyl alcohol. Resolder defective connections. Determine cause of burned items and repair. Repair defective circuit runs.
Resistors	Burned, cracked, broken, or blistered.	Replace defective resistors. Check for cause of burned component and repair as necessary.
Solder Connections	Cold solder or rosin joints.	Resolder joint and clean with isopropyl alcohol.
Capacitors	Damaged or leaking cases. Corroded solder on leads or terminals.	Replace defective capacitors. Clean solder connections and flush with isopropyl alcohol.
Semiconductors	Loosely inserted in sockets. Distorted pins.	Firmly seat loose semiconductors. Remove devices having distorted pins. Carefully straighten pins (as required to fit the socket), using long-nose pliers, and reinsert firmly. Ensure that straightening action does not crack the pins, causing them to break.
Wiring and Cables	Loose plugs or connectors. Burned, broken, or frayed wiring.	Firmly seat connectors. Repair or replace defective wires or cables.
Chassis	Dents, deformations, and damaged hardware.	Straighten, repair, or replace defective hardware.

INSPECTION. Inspect the internal parts of the 2245A for damage and wear, using Table 6–3 as a guide. Repair any problems found immediately. The repair method for most visible defects is obvious, but take particular care if heat–damaged components are found. Since overheating usually indicates other trouble in the instrument, the cause of overheating must be found and corrected to prevent further damage.

If any electrical component is replaced, do a Performance Check for the affected circuit and for other closely related circuits (see Section 4 for the Performance Check). If repair or replacement work is done on any of the power supplies, do a complete Performance Check and, if so indicated, an instrument readjustment (see Section 5 for Adjustment Procedure).

CAUTION

To prevent damage from electrical arcing, ensure that circuit boards and components are dry before applying power to the instrument.

CLEANING. To clean the interior, blow off dust with dry, low–pressure air (approximately 9 psi). Remove any remaining dust with a soft brush or a cloth dampened with a solution of mild detergent and water. A cotton–tipped applicator is useful for cleaning in narrow spaces and on circuit boards. If these methods do not remove all the dust or dirt, the instrument may be spray washed using a solution of 1% mild detergent and 99% water as follows:

1. Remove covers and shields to reach parts to be cleaned (see Removal and Replacement Instructions).

2. Spray wash dirty parts with the detergent–and–water solution; then use clean water to thoroughly rinse them.

3. Dry all parts with low–pressure air.

4. Dry all components and assemblies in an oven or drying compartment using low–temperature (125°F to 150°F) circulating air.

SWITCH CONTACTS. Switch contacts are permanently treated when assembled. Neither cleaning nor other preventive maintenance is necessary, unless the switch board is replaced or the switch assembly has remained disassembled for a long time.

LUBRICATION

A regular lubrication program for the instrument is not necessary. Most of the potentiometers used in this instrument are permanently sealed and generally do not require periodic lubrication. The backs of the front–panel knob guides have been lubricated when assembled and will require lubrication again only when the front–panel assembly is replaced. Rotary switches are installed with proper lubrication when assembled and will require lubrication only when the rotor is replaced.

http://www.ebaman.com

SEMICONDUCTOR CHECKS

Periodic checks of the transistors and other semiconductors in the oscilloscope are not recommended. The best check of semiconductor performance is actual operation in the instrument.

PERIODIC READJUSTMENT

To ensure accurate measurements, check the performance of this instrument every 2000 hours of operation or, if used infrequently, once each year. If you replace any components, it may be necessary to readjust the affected circuits.

Complete performance check instructions are given in Section 4 of this manual; adjustment instructions are given in Section 5. The Performance Check Procedure can be helpful in localizing certain troubles in the instrument. In some cases, minor problems may be revealed or corrected by readjustment. If only a partial adjustment is performed, see Table 5–1 (the interaction chart) for possible adjustment interaction with other circuits.

TROUBLESHOOTING

INTRODUCTION

Preventive maintenance done on a regular basis should reveal most potential problems before an instrument malfunctions. However, should troubleshooting be needed, the following information will help to locate a fault. In addition, the Theory of Operation and the Diagrams sections of this manual may be helpful while troubleshooting.

TROUBLESHOOTING AIDS

Diagnostic Firmware

This instrument contains built-in diagnostic routines that can aid in localizing failures. An automatic power-up self test checks the system RAM and ROM and readout interface circuitry. If a failure is detected, this information is presented in either of two ways: a flashing code display on the Trigger LEDs or, if the instrument is capable of presenting a readout, error messages in the crt display. In addition to the power-on testing, various diagnostic routines can be run from the service mode using the SERVICE MENU. (See Internal Testing Capabilities in this subsection for the details.)

http://www.ebamanuals.com

Schematic Diagrams

Complete schematic diagrams are located on tabbed foldout pages in the Diagrams section. Portions of circuitry mounted on each circuit board are enclosed by heavy black lines. The assembly number and name(s) of the circuit(s) are shown near the top or the bottom edge of each diagram.

Functional blocks on schematic diagrams are outlined with a wide gray line. Components within the outlined area perform the function designated by the block label. The Theory of Operation uses these functional block names when describing circuit operation as an aid in cross-referencing between the circuit description and the schematic diagrams.

Component numbers and electrical values of components in this instrument are shown on the schematic diagrams. Refer to the first page of the Diagrams section for the reference designators and symbols used to identify components. Important voltages and waveform reference numbers (enclosed in hexagonal-shaped boxes) are also shown on each diagram. Waveform illustrations are located adjacent to their respective schematic diagram.

Circuit Board Illustrations

Circuit board illustrations showing the physical location of each component are provided for use with the schematic diagrams. Each board illustration is found in the Diagrams section on the back of a foldout page, preceding the first related schematic diagram.

The locations of waveform test points are marked on the circuit board illustrations with hexagonal outlined numbers corresponding to the waveform numbers on both the schematic diagram and the waveform illustrations.

Circuit Board Locations

The location of a circuit board within the instrument is shown on the foldout page along with the circuit board illustration.

Circuit Board Interconnections

A circuit board interconnection diagram (schematic Diagram 15) is provided in the Diagrams section to aid in tracing a signal path or power source between boards. All wire, plug, and jack numbers are shown along with their associated wire or pin numbers and signal names.

Power Distribution

Two power distribution diagrams (schematic Diagrams 13 and 14) are provided to aid in troubleshooting power supply problems. These diagrams show the components that the various voltages are applied to and the jumper connections and decoupling components used to apply the power to those circuits. Excessive loading on a power supply by a circuit fault may be isolated by disconnecting the appropriate jumpers.

Grid Coordinate System

Each schematic diagram and circuit board illustration has a grid border along its left and top edges. A table located next to each schematic diagram lists the grid coordinates of each component shown in that diagram. To aid in physically locating components on the circuit board, the table also lists the

grid coordinates of each component in the circuit board illustration.

Near each circuit board illustration is an alpha-numeric listing of all components mounted on that board. The second column in each listing identifies the schematic diagram in which each component can be found. These component-locator tables are especially useful when more than one schematic diagram is associated with a particular circuit board.

Component Color Coding

Information regarding color codes and markings of resistors and capacitors is located in the color-coding illustration (Figure 9-1) at the beginning of the Diagrams section.

RESISTOR COLOR CODE. Resistors used in this instrument are carbon-film, composition, or precision metal-film types. They are usually color coded with the EIA color code; however, some metal-film type resistors may have the value printed on the body. The color code is interpreted starting with the stripe nearest to one end of the resistor. Composition resistors have four stripes; these represent two significant digits, a multiplier, and a tolerance value. Metal-film resistors have five stripes representing three significant digits, a multiplier, and a tolerance value.

CAPACITOR MARKINGS. Capacitance values of common disc capacitors and small electrolytics are marked on the side of the capacitor body. White ceramic capacitors are color coded in picofarads, using a modified EIA code.

Dipped tantalum capacitors are color coded in microfarads. The color dot indicates both the positive lead and the voltage rating. Since these capacitors are easily destroyed by reversed or excessive voltage, be careful to observe the polarity and voltage rating when replacing them.

DIODE COLOR CODE. The cathode end of each glass-encased diode is indicated by either a stripe, a series of stripes, or a dot. For most diodes marked with a series of stripes, the color combination of the stripes identifies three digits of the Tektronix Part Number, using the resistor color-code system. The cathode and anode ends of a metal-encased diode may be identified by the diode symbol marked on its body.

Semiconductor Lead Configurations

Figure 9-2 in the Diagrams section shows the lead configurations for semiconductor devices used in the instrument. These lead configurations and case styles are typical of those used at completion of the instrument design. Vendor changes and performance improvement changes may result in changes of case styles or lead configurations. If the device in question does not appear to match the configuration shown in Figure 9-2, examine the associated circuitry or consult a manufacturer's data sheet.

Multipin Connections

This instrument uses two types of cable connectors. The main type is an etched-circuit ribbon cable with pin connectors crimped directly to the end of the cable. The number one pin is indicated by a mark on the ribbon cable. The other type of connector is a plastic holder containing connectors crimped to the ends of individual wires. Orientation, where important, is indicated by a triangle (arrow).

TROUBLESHOOTING EQUIPMENT

The equipment listed in Table 4-1 of this manual, or equivalent equipment, may be useful when troubleshooting this instrument.

TROUBLESHOOTING TECHNIQUES

The following procedure is arranged in an order that enables checking simple trouble possibilities before requiring more extensive troubleshooting. The first two steps use diagnostic routines built into the operating system of the instrument.

The next four procedures are check steps that ensure proper control settings, connections, operation, and adjustment. If the trouble is not located by these checks, the remaining steps will aid in locating the defective component. When the defective component is located, replace it by using the appropriate replacement procedure given under Corrective Maintenance in this section.

CAUTION

Before using any test equipment to make measurements on static-sensitive, current-sensitive, or voltage-sensitive components or assemblies, ensure that any voltage or current supplied by the test equipment does not exceed the limits of the component to be tested.

http://www.soaman.com

1. Power-up Tests

When the instrument power is applied, self tests are automatically run to verify proper operation of the system RAM and ROM and readout interface circuitry. If the power-up test fails, failure codes appear in the Trigger Mode LEDs to identify the general location of the fault. (See Power-Up Testing later in this section for failure-code information.)

2. Diagnostic Routines

Various diagnostic routines can be run from the service mode. The routines can be run at any time by displaying the SERVICE MENU and selecting the desired item from the menu using front panel pushbuttons.

Entry into the SERVICE MENU and its uses are explained in the Diagnostic Routines discussion later in this section.

3. Check Control Settings

Incorrect control settings can give a false indication of instrument malfunction. If there is any question about the correct function or operation of any control, refer to the Operating Information in the 2245A Operators Manual.

4. Check Associated Equipment

Before proceeding, ensure that any equipment used with the 2245A is operating correctly. Verify that input signals are properly connected and that the interconnecting cables are not defective. Check that the ac-power-source voltage to all equipment is correct.

5. Visual Check

WARNING

To avoid electrical shock, disconnect the instrument from the ac power source before making a visual inspection of the internal circuitry.

Look for broken connections or wires, damaged components, semiconductors not firmly mounted, damaged circuit boards, or other clues to the cause of an instrument malfunction.

6. Check Instrument Performance and Adjustment

Check the performance of either those circuits where you suspect trouble or the entire instrument. An apparent trouble may be the result of misadjustment. The complete performance check is given in Section 4 of this manual, and adjustment instructions are given in Section 5.

7. Isolate Trouble to a Circuit

To isolate problems, use any symptoms noticed when checking the instrument's operation to help localize the trouble to a particular circuit. For example, if the vertical deflection is incorrect on all channels, the problem is most likely from the delay line driver to the vertical output; if deflection is bad only on one channel, the problem is from the attenuator of that channel to the input of the delay line driver. The detailed block diagram shown in the foldout section may be used as an aid in determining signal flow and control line dependency for correct circuit operation. Refer to the troubleshooting hints given in Table 6-6 for diagnostic routine failures. Troubleshooting hints by diagram are given immediately following Table 6-6, and Table 6-9 may be used to aid in locating a problem in the measurement system.

http://www.tbaman.com

8. Check Power Supplies

WARNING

For safety reasons, an isolation transformer must be used between the ac power main and the instrument's ac power input whenever troubleshooting is done with the cabinet removed. This is especially important when working in the Preregulator and Inverter Power Supply sections of the instrument.

When trouble symptoms appear in more than one circuit, first check the power supplies; then check the affected circuits by taking voltage and waveform readings. Check first for the correct output voltage of each individual supply. These voltages are measured between J1204 (interface connector between power supply and main board) and ground (J1204 pin 4 or 8). See the associated circuit board illustration and Table 6-4.

Voltages levels may be measured either with a DMM or with an oscilloscope. Voltage ripple amplitudes must be measured using an oscilloscope. Use a 1X probe with as short a ground lead as possible to minimize stray pickup.

NOTE

Use 20 MHz bandwidth limiting on the test oscilloscope. A higher bandwidth may produce higher observed ripple levels.

If the power-supply voltages and ripple are within the listed ranges in Table 6-4, the supply can be assumed to be working correctly. If they are outside the range, the supply may be either misadjusted, operating incorrectly, or excessively loaded. The power supply adjustment procedure is given in the Power Supply, Display, and Z-Axis subsection of Section 5 (the Adjustment Procedure).

A defective component elsewhere in the instrument can create the appearance of a power-supply problem and may also affect the operation of other circuits. Use the power distribution diagrams (schematic Diagrams 13 and 14 in the foldouts) to aid in localizing a loading problem to a particular circuit.

9. Check Circuit Board Interconnections

After the trouble has been isolated to a particular circuit, again check for loose or broken connections, improperly seated semiconductors, and heat-damaged components.

10. Check Voltages and Waveforms

Often the defective component can be located by checking circuit voltages or waveforms. Typical voltages are listed on the schematic diagrams. Waveforms indicated on the schematic diagrams by hexagonal-outlined numbers are shown adjacent to the diagrams. Waveform test points are shown in the circuit board illustrations.

NOTE

Voltages and waveforms indicated on the schematic diagrams are not absolute and may vary slightly between instruments. To establish operating conditions similar to those used to obtain these readings, see the Voltage and Waveform Setup Conditions preceding the waveform illustrations in the Diagrams section.

Note the recommended test equipment, front-panel control settings, voltage and waveform conditions, and cable-connection instructions. Any special control settings required to obtain a given waveform are noted under the waveform illustration. Volts/Div and Sec/Div settings of the test oscilloscope for a waveform are indicated in the waveform illustration.

http://www.ebaman.com

Table 6-4

Power Supply Voltage and Ripple Limits

Nominal Supply Voltage	Test Point (+ lead)	Limits (0°C to 50°C)		P-P Ripple [a]	
		Min	Max	60-150 Hz	20-40 kHz
+130	J1204-11	+127	+135	70 mV	70 mV
+58	J1204-10	+55	+59	40 mV	120 mV
+15	J1204-7	+14.6	+15.6	8 mV	4 mV
+7.5	J1204-8	+7.4	+7.6	8 mV	4 mV
+5.0	J1204-1,2	+5.0	+5.3	30 mV	20 mV
-5.0	J1204-5	-5.1	-5.4	4 mV	4 mV
-7.5	J1204-9	-7.4	-7.8	4 mV	4 mV
-15 unreg	J1204-6	-15.5	-16.6	10 mV	100 mV

[a] At rated load.

11. Check Individual Components

WARNING

To avoid electric shock, always disconnect the instrument from the ac power source before removing or replacing components.

The following procedures describe methods of checking individual components. Two-lead components that are soldered in place are most accurately checked by first disconnecting one end from the circuit board. This isolates the measurement from the effects of the surrounding circuitry. See Figure 9-1 for component value identification and Figure 9-2 for semiconductor lead configurations.

CAUTION

When checking semiconductors, observe the static-sensitivity precautions given at the beginning of this section.

http://www.ebaman.com

TRANSISTORS. A good check of a transistor is actual performance under operating conditions. A transistor can most effectively be checked by substituting a known-good component. However, be sure that circuit conditions are not such that a replacement transistor might also be damaged. If substitute transistors are not available, use a dynamic-type transistor checker for testing. Static-type transistor checkers are not recommended, since they do not check operation under simulated operating conditions.

When troubleshooting transistors in the circuit with a voltmeter, measure both the emitter-to-base and emitter-to-collector voltages to determine whether they are consistent with normal circuit voltages. Voltages across a transistor may vary with the type of device and its circuit function.

Some of these voltages are predictable. The emitter-to-base voltage for a conducting silicon transistor will normally range from 0.6 V to 0.8 V. The emitter-to-collector voltage for a saturated transistor is about 0.2 V. Because these values are small, the best way to check them is by connecting a sensitive voltmeter across the junction rather than comparing two voltages taken with respect to ground. If the former method is used, both leads of the voltmeter must be isolated from ground.

If voltage values measured are less that those just given, either the device is shorted or no current is flowing in the external circuit. If values exceed the emitter-to-base values given, either the junction is reverse biased or the device is defective. Voltages exceeding those given for typical emitter-to-collector values could indicate either a nonsaturated device operating normally or a defective (open-circuited) transistor. If the device is conducting, voltage will be developed across the resistors in series with it; if open, no voltage will be developed across the resistors unless current is being supplied by a parallel path.

CAUTION

When checking emitter-to-base junctions, do not use an ohmmeter range that has a high internal current. High current may damage the transistor. Reverse biasing the emitter-to-base junction with a high current may degrade the current-transfer ratio (Beta) of the transistor.

A transistor emitter-to-base junction also can be checked for an open or shorted condition by measuring the resistance between terminals with an ohmmeter set to a range having a low internal source current, such as the R X 1 kΩ range. The junction resistance should be very high in one direction and much lower when the meter leads are reversed.

When troubleshooting a field-effect transistor (FET), the voltage across its elements can be checked in the same manner as previously described for other transistors. However, remember that in the normal depletion mode of operation, the gate-to-source junction is reverse biased; in the enhanced mode, the junction is forward biased.

INTEGRATED CIRCUITS. An integrated circuit (IC) can be checked with a voltmeter, test oscilloscope, or by direct substitution. A good understanding of circuit operation is essential when troubleshooting a circuit having IC components. Use care when checking voltages and waveforms around the IC so that adjacent leads are not shorted together. An IC test clip provides a convenient means of clipping a test probe to an IC.

CAUTION

When checking a diode, do not use an ohmmeter scale that has a high internal current. High current may damage a diode. Checks on diodes can be performed in much the same manner as those on transistor emitter-to-base junctions.

DIODES. A diode can be checked for either an open or a shorted condition by measuring the resistance between terminals with an ohmmeter set to a range having a low internal source current, such as the R X 1 kΩ range. The diode resistance should be very high in one direction and much lower when the meter leads are reversed.

Silicon diodes should have 0.6 V to 0.8 V across their junctions when conducting; Schottky diodes about 0.2 V to 0.4 V. Higher readings indicate that they are either reverse biased or defective, depending on polarity.

RESISTORS. Check resistors with an ohmmeter. Refer to the Replaceable Electrical Parts list for the tolerances of resistors used in this instrument. A resistor normally does not require replacement unless its measured value varies widely from its specified value and tolerance.

INDUCTORS. Check for open inductors by checking continuity with an ohmmeter. Shorted or partially shorted inductors can usually be found by checking the waveform response when high-frequency signals are passed through the circuit.

CAPACITORS. A leaky or shorted capacitor can best be detected by checking resistance with an ohmmeter set to one of the highest ranges. Do not exceed the voltage rating of the capacitor. The resistance reading should be high after the capacitor is charged to the output voltage of the ohmmeter. An open capacitor can be detected with a capacitance meter or by checking whether the capacitor passes ac signals.

12. Repair and Adjust the Circuit

If any defective parts are located, follow the replacement procedures given under Corrective Maintenance in this section. After any electrical component has been replaced, the performance of that circuit and any other closely related circuit should be checked. Since the power supplies affect all circuits, performance of the entire instrument should be checked if work has been done on the power supplies. Readjustment of the affected circuitry may be necessary. Refer to the Performance Check Procedure and the Adjustment Procedure, (sections 4 and 5) and to Table 5-1 (Adjustment Interactions).

INTERNAL TESTING CAPABILITIES

The diagnostics built into the 2245A permit the technician to test much of the digital circuitry and the digital-to-analog interface. The following text describes the testing capabilities of the Measurement Processor and the firmware controlled circuitry.

http://www.tomanuals.com

Power-Up Testing

The systems shown in Figure 6-1 are tested at power-on. Failure codes appear in the Trigger MODE LEDs, with ON being shown as "x" and OFF as "o" in the figure. In the event of a display failure where error messages cannot be displayed on the crt, the codes indicate a failure area to begin troubleshooting.

Tests Run	Failure Code (seen on the Trigger LEDS)					
	AUTO LEVEL	AUTO	NORM	TV LINE	TV FIELD	SGL SEQ
System RAM	X	O	O	O	O	O
System ROM	O	X	O	O	O	O
Readout Interface	O	O	X	O	O	O

6557-95

Figure 6-1. Power-on test failure codes.

Power-up tests performed are:

1. RAM diagnostics—failures indicated by flashing AUTO LEVEL lamp. Three diagnostics are run on all locations in the RAM:

   a. Store and read 00.

   b. Store and read FF.

   c. Store and read pseudo-random pattern.

2. ROM diagnostics—failures indicated by flashing AUTO lamp. Tests all of ROM, except for ROM header. Runs proprietary version of CRCC test.

3. Readout interface diagnostics—failures indicated by flashing NORM lamp. Performs a marching-one test around the loop from D7-D0 to R7-R0 and back.

SERVICE MODE

The service mode driver menu is accessed by pressing the CH 1 and CHOP/ALT Vertical MODE buttons at the same time. The main SERVICE MENU will be displayed as shown in Figure 6-2. Each service menu display has two parts; the part to the left is the service menu, and the part to the right is the modifier menu.

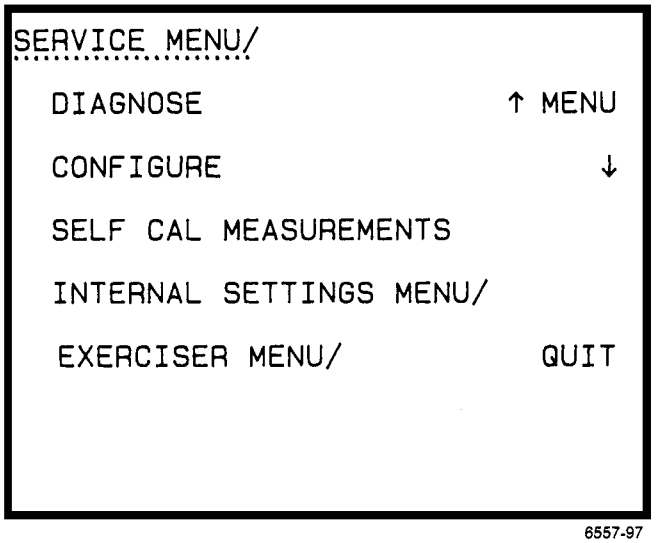

Figure 6-2. Main SERVICE MENU.

Each service menu has a title and a number of selectable items in the menu. The title appears in the top line of the crt display, and the selectable items appear under the title, indented (see Figure 6-2). Menu choices that are names of sub-menus have a following slash (/), and when one is underlined, the word "SELECT" appears in the modifier menu list. When a choice with sub-menus is selected, the sub-menu choices are displayed on the left side of the screen with the name of the selected sub-menu displayed in the top line.

A menu choice that has no following slash is an executable service routine. The routine may be run by underlining it and pressing the CH 2 button (corresponding to the RUN label that appears in the modifier menu list). Executable servicing selections are: diagnostics that return either a pass message or a fail message along with service data; one-shot exercisers that carry out some service and immediately return to the menu; or regular exercisers that carry out a service while continuously displaying service data.

http://www.sbaman.com

An underlined service-menu choice is available for selection. To select a menu item, use the CH 1 or ADD buttons corresponding to the up-arrow and down-arrow symbols to move the underline up or down in the SERVICE MENU. When the underline is below the menu title in the top line, pressing the CH 1 (up-arrow) button returns to the preceding menu containing that sub-menu (an up-menu operation).

Pressing CH 4 (QUIT) any time the choice is displayed will cause the scope to return to normal oscilloscope mode. If a service routine is operating that has an END menu selection displayed, pressing CH 1 (END) exits the routine and returns to the selection menu (where QUIT is displayed). Routines that run once return to the selection menu when finished.

The diagnostic tests in the SERVICE MENU may be run with a conditional setting that determines how many times the routine is done. The conditional MODE setting menu choice appears in the modifier menu when the DIAGNOSE choice in the SERVICE MENU is underlined (see Figure 6-3). One of the following mode types will be displayed:

ONCE, CONTINUOUS, UNTIL PASS, or UNTIL FAIL

Change the mode type displayed in the bottom line by pressing the CHOP/ALT (MODE) button. When ONCE is the mode, the diagnostic is run once, and

the result is displayed. When CONTINUOUS is the mode, the diagnostics are run continuously. When UNTIL PASS is the mode, the diagnostics are run until they pass. When UNTIL FAIL is the mode, the diagnostics are run until they fail. In order to stop a diagnostic that is looping in the CONTINUOUS, UNTIL PASS, or UNTIL FAIL mode, press the CH 1 (HALT) button. The diagnostic will stop and display the current status. When the status is displayed, press CH 1 (END) to return to the SERVICE MENU choices.

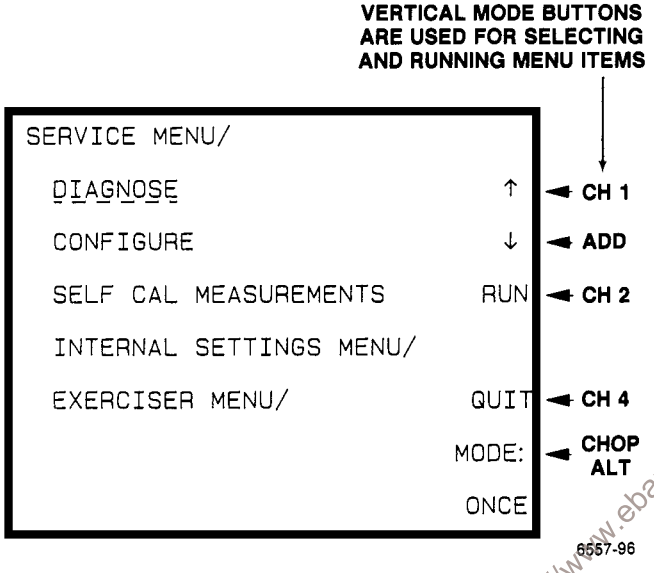

Figure 6-3. SERVICE MENU with DIAGNOSE choice selected.

http://www.ebaman.com

Service Routines

Descriptions of the available service routines are given in Table 6-5. The complete SERVICE MENU has this structure:

```
SERVICE MENU/
    DIAGNOSE
    CONFIGURE
    SELF CAL MEASUREMENTS
    INTERNAL SETTINGS MENU/
        MAKE FACTORY SETTINGS
        ADJUST VERTICAL OUTPUT
    EXERCISER MENU/
        FRONT PANEL MENU/
            EXERCISE POTS
            EXERCISE LEDS
            EXERCISE SWITCHES
        PROC BOARD MENU/
            A TO D MENU/
                EXERCISE DACS
                EXERCISE PORTS
            READOUT MENU/
                SHOW READOUT ROM HEADER
                EXERCISE RO INTERFACE
            SHOW SYSTEM ROM HEADER
            EXERCISE TIME REF
            SHOW AUTO RESTARTS
        MAIN BOARD MENU/
            SHIFT REGISTER MENU/
                EXERCISE SR 0
                EXERCISE SR 1
                EXERCISE SR 2
            EXERCISE VOLT REF
```

Table 6-5
SERVICE MENU Selections

Menu Item	Action
DIAGNOSE	Runs all diagnostics in sequence, stopping at the first failed diagnostic. (See Table 6-6 for a diagnostic test failure troubleshooting guide.) Diagnostics are: RO (readout) INTERFACE ROM RAM SLIC CONTROL REG SHIFT REGISTERS (in SR2, SR0, SR1, SR3 order) DAC TRIGGERS
CONFIGURE	Configures the scope-mode operation of the instrument according to the users' wishes. Configuration is done by answering a yes/no question. The question is: KEEP READOUT ON IN SGL SEQ? Selecting YES causes the readout to be on constantly when in SGL SEQ trigger mode. Selecting NO causes the readout to flash on for a brief period after the signal display sequence has finished.

Table 6-5 (cont)
SERVICE MENU Selections

Menu Item	Action
SELF CAL MEASUREMENTS	Self characterizes the gain and offset errors in the vertical system and time base so that they may be compensated for in the measurements. This should be run only after instrument is warmed up properly, although if desired, it can be used to compensate for an unusual operating temperature.
MAKE FACTORY SETTINGS	Resets the front panel settings to those shipped with the instrument. Used to produce a known setup condition. The following is a partial list of settings: Vertical MODE — CH 1 and CH 2 CH 1/CH 2 COUPLING — DC CH 1, 2, 3, 4 VOLTS/DIV — .1 V CH 2 INVERT — OFF SCOPE BW — OFF Horizontal MODE — A A SEC/DIV — .1 ms B SEC/DIV — 1 µs A/B Trigger SLOPE — ⌐ A/B Trigger SELECT — A A Trigger MODE — AUTO LEVEL B Trigger MODE — RUNS AFTER A/B Trigger SOURCE — CH 1 A/B Trigger COUPLING — DC Measurements — OFF
ADJUST VERTICAL OUTPUT	Used to adjust the vertical output gain and centering (see Adjustment Procedure in Section 5).
EXERCISE POTS	Shows the name of the latest digitized potentiometer moved, along with its hexadecimal value (from FF to 00). Starts by showing the HORIZ POSITION and its value until another pot is adjusted. Pressing CH 1 (END) exits the exerciser.
EXERCISE LEDS	Uses the delay control to select a single LED, turn it on, and display its circuit number. The exerciser is used to check for adjacent-row or adjacent-column shorts in the front panel board and for inoperative LEDs. Pressing CH 1 (END) exits the excerciser.
EXERCISE SWITCHES	Shows the circuit number of the latest momentary-contact button pressed, or the name and position of the latest rotary switch turned. Pressing CH 1 (END) exits the exerciser.
EXERCISE DACS	Attaches the DAC (U2302, Diagram 11) to a single sample-and-hold channel (through U2303), and outputs a sawtooth waveform to that channel. Select the channel by pressing CHOP/ALT (STEP). This excerciser may be used to trace a sample-hold value through the system, with the DAC system operating in a non-multiplexed mode. Pressing CH 1 (END) exits the exerciser.

http://www.ebaman.com

Table 6-5 (cont)
SERVICE MENU Selections

Menu Item	Action
EXERCISE PORTS	Continuously does analog-to-digital conversion on a single A-to-D port. Select the port by pressing CHOP/ALT (STEP). The exerciser may be used to trace a single potentiometer wiper value or probe code value through the system by operating the A-to-D converter in a non-multiplexed mode. Pressing CH 1 (END) exits the exerciser.
SHOW READOUT ROM HEADER	Shows the Readout ROM part number (U2408, Diagram 9) and its expected and actual checksum.
EXERCISE RO INTERFACE	Continuously echos a marching-bit value across the readout interface. This exerciser may be used to check the integrity of the Measurement-Processor-to-Readout-Processor communication system. Pressing CH 1 (END) exits the exerciser.
SHOW SYSTEM ROM HEADER	Shows the system ROM part numbers (U2519, Diagram 8) and checksums of the installed firmware version.
EXERCISE TIME REF	Steps through the timing frequencies used to characterize the horizontal timing accuracy. Calibration periods are shown in the following table. Time / Test Period 5 µs / 32 µs 10 µs / 64 µs 20 µs / 128 µs 50 µs / 256 µs .1 ms / 512 µs .2 ms / 1.024 ms .5 ms / 2.048 ms 1 ms / 4.096 ms 2 ms / 8.192 ms 5 ms / 32.768 ms
SHOW AUTO RESTARTS	Shows the address being executed if a software error occurs that causes execution out of normal memory space. This is for factory use only and is of no use in field servicing of the instrument. If an address is ever displayed when SHOW AUTO RESTART is run, record the address displayed and report it to a service center; the error address is cleared from memory when SHOW AUTO RESTARTS is exited.
EXERCISE SR 0	Shifts alternate zeros and ones through Shift Register 0 (U171, U172, and U173, Diagram 1). This shift register sets Attenuator and Input Coupling relay positions and Vertical Preamplifier gain settings.
EXERCISE SR 1	Shifts alternate zeros and ones through Shift Register 1 (U302 and U303, Diagram 5; U1103, Diagram 3). This shift register sets sweep speeds and auxiliary trigger settings (TV Trigger, Scope Bandwidth, X10 magnification, and X-Y Mode).
EXERCISE SR 2	Shift alternate zeros and ones through Shift Register 2 (U502, Diagram 4).

http://www.eeman.com

Table 6-5 (cont)
SERVICE MENU Selections

Menu Item	Action
EXERCISE VOLT REF	Steps through all settings of the Voltage Reference Generator (U931, Diagram 7) that are used to calibrate the Volts Measurement system. For each setting, Channels 1 and 2 are placed into the gain configuration (2 mV through 50 mV) that uses that setting. The voltage select lines (VOLTS CAL 2-0) may be checked for activity, and the generated VOLTS CAL SIGNAL may be measured to check its values.

VOLTS/DIV	Cal voltage
2 mv	10 mv
5 mv	25 mv
10 mv	50 mv
20 mv	100 mv
50 mv	250 mv

DIAGNOSE Tests

The complete DIAGNOSE routine may be called up by the service technician as needed to aid in troubleshooting the instrument. Testing routines and troubleshooting information for use in the event of a failed test are given in Table 6-6.

http://www.eaman.com

Table 6-6
DIAGNOSE ROUTINES

Error Label	Path, Devices Tested, and Troubleshooting Actions
INTERFACE ERROR	Measurement Processor to Readout Processor Communications. WROTE (hex number that was written, 2 characters). READ (hex number that was read, 2 characters). This test rotates a 1 through the byte on the bus lines. The difference between WROTE and READ indicates which bit is stuck.
	Devices to troubleshoot: U2401, U2402, U2417C and D, and bus lines between Measurement Processor and Readout Processor. Check U2501 pin 29 for enabling signal to U2402, and U2400 pin 22 for clock.

Table 6-6 (cont)
DIAGNOSE ROUTINES

Error Label	Path, Devices Tested, and Troubleshooting Actions
RAM ERROR	Writes and reads test bytes from the Readout RAM (U2406). ADDRESS (hex address of error location, 3 characters). WROTE (hex data written, 2 characters). READ (hex data read, 2 characters). The difference between WROTE and READ data indicates a stuck bit.
RO ROM	PART NUM (Tektronix Part Number without dashes). EXPECTED CHECKSUM (hex number, 2 characters). ACTUAL CHECKSUM (hex number, 2 characters). NOTE *Readout ROM is internal to the Readout Processor, U2400; a failure of this test may mean a bad Readout Processor.*
REG SR 2	Front Panel Potentiometer Multiplexer data path check. WROTE (hex data written, 1 character). READ (hex data read, 1 character). Device Tested: U502, Diagram 4.
	Troubleshooting checks: Check pin 11 for correct clock. Check pin 2 for data. Check pin 12 for multiplexer output.
REG SR 0	Attenuator and Preamplifier data path check. WROTE (hex data written, 6 characters). READ (hex data read,, 6 characters). Devices Tested: U171, U172, and U173 on Diagram 1. NOTE *U171 and U172 have +15 V clocks and data; U173 has +5 V clocks and data.*
	Troubleshooting checks: Check pin 3 of each device for correct clock. Check pin 9 of each device for marching bit pattern. Attenuator relay latches are driven and a clacking sound is heard.

http://www.ebmanuals.com

Table 6-6 (cont)
DIAGNOSE ROUTINES

Error Label	Path, devices tested, and troubleshooting actions
REG SR 1	Sweeps and Auxiliary Trigger data path check. WROTE (hex data written, 6 characters). READ (hex data read, 6 characters). Devices Tested: U302 and U303 on Diagram 3; U1103 on Diagram 3. Clock and data levels for U302 and U303 are +15 V; they are +5 V for U1103.
	Troubleshooting checks: Check pin 3 of each device for correct clock. Check pin 9 of each device for marching bit pattern.
REG SR 3	Switch board data path check. WROTE (hex data written, 4 characters). READ (hex data read, 4 characters). NOTE *There is no exerciser for SR 3, but it is included in "DIAGNOSE."* Devices Tested: U2001 and U2002, Diagram 10.
	Troubleshooting Checks: Check pin 10 for serial data in. Check pin 9 for serial data out. Check pin 2 for clock.
DAC ERROR 0	The A-to-D system, Diagram 11, is not working correctly. Ground level was digitized out of the specified error limits.
	Devices to troubleshoot: U2515 and U2517, Diagram 8; U2306, U2302, U2300, U2313, and U2314, Diagram 11; U506, Diagram 7

http://www.ebanman.com

Table 6-6 (cont)
DIAGNOSE ROUTINES

Error Label	Path, Devices Tested, and Troubleshooting Actions
(TRIGGERS)	The trigger diagnostic partially checks the Trigger SOURCE, Trigger CPLG, and Trigger SLOPE circuitry.
	Error Messages: TIME SIGNAL TOO SMALL AT A Trigger — A Trigger circuitry failed amplitude test. TIME SIGNAL TOO SMALL AT B Trigger — B Trigger circuitry failed amplitude test. NO A Trigger FOR TIME CAL SIGNAL — (2 digit code, see table) Trigger never occurred.
	Time Base Cal Signal / Code 128 µs — 0 8.192 ms — 1 256 µs — 2 4.096 ms — 3 2.048 ms — 4 512 µs — 5 32.768 ms — 6 1.024 ms — 7 64 µs — 13 32 µs — 14 Check U421, U431, U1106A, and associated circuitry, Diagram 3. SLIC (Display Logic IC, U600) and FLIC (Trigger Logic IC, U602) gate outputs and level shifters, Diagram 4.

http://www.ebaman.com

TROUBLESHOOTING HINTS BY DIAGRAM

VERTICAL SELF CAL—Checks Cursor and Preamplifier Outputs

The circuitry listed below must be operational for Vertical SELF CAL to work. Troubleshoot these circuits if voltage measurements are not correct.

1. DAC system (U2303, U2304, and U2305, Diagram 11).
2. Trigger Level Comparators (U431 and U421, Diagram 3).
3. VERT COMP feedback (U702, Diagram 2).
4. ECL-to-CMOS translators (Q604, Q605, Q606, Q607, Q602, and Q603) between U600 and U602 (Diagram 4).
5. Data to Measurement Processor (data bus and bus transceivers, Diagram 8).
6. VOLTS CAL signal (U931, Diagram 7).

7. Vertical Preamps (U210, U220, U230, and U240), Delay Line Drivers (Q250, Q251, Q252, and Q253), and Vertical Position Switching circuitry (U203, U801B, U201, U202, U280, Q284 and Q285, Diagram 2).

HORIZONTAL SELF CAL—Checks Sweep Timing

1. Put the oscilloscope into Self Cal and check at U421A pin 4 (Diagram 3) for changing width calibration signals.

2. Run the "EXERCISE TIME REF" exerciser and check for correct TB CAL signal at U421A pin 4, Diagram 3 (see Table 6-5).

Schematic Diagram 1—VERTICAL INPUTS

1. Run DIAGNOSE to check for shift register failure.

2. Run the shift register exerciser for Shift Register 0. Check for clock, data, and strobe signals. Check the shift register outputs.

NOTE

The outputs of U171 and U172 are at 15 V; the outputs from U173 are at 5 V.

3. Check the outputs of the relay driver transistor arrays (U174 and U175). When a transistor is blown in one of the arrays, the usual symptom is 8 V on its output.

4. Go to a known setup and check the outputs for correct levels (see the circuit description in Section 3). The MAKE FACTORY SETTINGS selection under INTERNAL SETTINGS of the SERVICE MENU provides known control states.

5. Check relay contacts.

6. Follow the signal path and check for correct signal and gains. Put in a known signal for each attenuator setting and check at the Vertical Preamplifier inputs to determine if the signal path is ok. The front panel boards and the attenuator shield have to be removed to gain access to the solder side of the Main board.

7. Check the channel input buffer amplifier (U112 or U122) output if the vertical deflection of either channel 1 or channel 2 is defective. If the buffer amplifier output is held at −6 V or a strange sawtooth signal is present, replace that buffer amplifier.

8. Check gains and offsets of the CH 3 or CH 4 input buffers (Q131 or Q151).

Schematic Diagram 2—VERTICAL PREAMPLIFIERS, DELAY LINE DRIVERS and OUTPUT

Perform the following troubleshooting checks with no signal input.

1. Check both inputs of the delay line. If offset on either side, troubleshoot the offsetting side. Inputs to the bases of Q250 and Q251 should be at +7.5 V.

2. Differential voltage across the delay line should be 0 V ±0.5 V.

3. Check signal gain through the Preamplifier ICs (U210, U220, U230, and U240). Gain is 10 mV/division of input signal.

4. Check INVERT operation.

5. Check the operation of U260 if the inputs to delay line driver are not at 7.5 V. This operational amplifier is the bias stabilization circuit that compares the average dc level to +7.5 and moves the emitters (and therefore the bases) of Q250 and Q251 to return the inputs to 7.5 V.

http://www.ebaman.com

WARNING

Vertical output transistors Q701 and Q702 run extremely hot (in excess of 100°C). Use care when probing in those areas to not touch the heat sinks or cases with bare fingers.

WARNING

The vertical output amplifier runs hot. DO NOT touch it with bare fingers.

CAUTION

The metal tab on top of the vertical output amplifier IC (U701) is NOT ground. Do not connect a ground lead to it. Doing so may cause the IC to fail and usually causes R733 from pin 14 of U701 to the −5 V supply to open.

6. A common mechanical failure is lead breakage on R708. If the resistor pack is moved excessively, the leads will break. The resistor pack will then have to be replaced.

NOTE

The heat sinks on Q701 and Q702 may be removed for short periods of time to permit access for a test probe around the close-in circuitry. DO NOT leave them off for extended periods. Check that they are on all the way when replaced.

7. If the heat sinks on the output transistors shake loose, the plastic grommet inserted in the top of the heat sink prevents the sink from touching the metal cabinet. If the grommet is left out, the metal cabinet may come in contact with the heat sink; and the transistor, the vertical output amplifier IC, and R733 will usually fail. If the heat sinks are removed during maintenance, they must fit tightly when replaced and the grommet must be checked.

NOTE

The cases of Q701 and Q702 are the base leads of the transistors, not the collector as is usual for a TO5 case. Also, the tab marks the collector lead, not the emitter.

8. The vertical outputs to the crt may be momentarily shorted together to check for offsets in the crt. (This should center the vertical trace.)

9. The output at pins 6 and 7 of U701 may be shorted together to check for offsets in the Vertical Preamplifier. (This should bring the trace to within ±0.5 division of center.)

10. Pins 18 and 19 of U701 may be shorted together to check for offsets from the delay line. (This should bring the trace to within ±1.5 divisions of center.)

11. Shorting the bases of Q701 and Q702 together usually causes the vertical output circuit to oscillate.

12. Check the center lead of R708 for a voltage of about +60 V, and a common-mode voltage difference (between the two deflection plates) of about 0 V (when pins 6 and 7 of U701 are shorted together).

13. Check the operation of Vertical Comparator U702 by running SELF CAL. (The Vertical Comparator circuit is enabled only during a vertical Self Cal.)

Schematic Diagram 4—DISPLAY AND TRIGGER LOGIC AND PROCESSOR INTERFACE

1. Put the oscilloscope into A Horizontal Display mode with CH 1 and CH 2 Vertical modes on.

2. Check U600 vertical enables (CH 1 EN, pin 39; CH 2 EN, pin 38).

3. Probe U600 A TRIG selects (ATS 0, pin 31; ATS 1, pin 32; ATS 2, pin 33; A SLOPE, pin 30) and B TRIG selects (BTS 0, pin 27; BTS 1, pin 28; BTS 2, pin 29; B SLOPE, pin 26) while making trigger source and slope changes on the front panel. (Probe the A select lines for A trigger changes and the B select lines for B trigger changes.)

4. Check the 10 MHz clock at U600 pin 1 and U600 power sources. Check the 1 kHz clock at pin 2.

5. Check communication lines ($\overline{\text{SLIC RD}}$, pin 8; $\overline{\text{SLIC WR}}$, pin 3; ADDR0 through ADDR3, pins 4 through 7, respectively; and MB DATA, pin 9) for activity while making front-panel trigger mode changes.

6. Check TH0 line, pin 17. Signal should go to a logic high then low again for every new front-panel setup condition, such as changing trigger mode, vertical mode, etc.

7. Check TDI, U600, pin 10, for a CMOS-level switching signal.

8. Check TDO, U602, pin 30, for an ECL-level switching signal.

9. Check the A TRIG signal at U602 pin 7.

10. Check the A GATE signal at U602 pin 14. Vary the Holdoff control to see if the spacing between each A GATE pulse changes.

11. Check the Holdoff oscillator output at U600 pin 15. Vary the HOLDOFF control to see if the width of the oscillator pulses varies.

Schematic Diagram 5—A AND B SWEEPS AND DELAY COMPARATORS

1. Check that the baseline voltage (level that is present during holdoff after retrace) of the A and B ramp signals is −2 V. (The baseline level is referenced to the output of U309B and controlled by Q302, Q303, and Q304 for the

http://www.ebaman.com

A sweep and Q315, Q316, and Q317 for the B sweep).

2. Check the Sweep End Comparators, U316, for correct output. The sweep should end at a maximum of 2.5 V. Check the outputs (pin 15 for the A Sweep and pin 2 for the B Sweep) for about 3.8 V (the middle of ECL transitions).

3. Place the oscilloscope in delay and delta delay and check the Delay Time Comparators for correct outputs (DLY END 1 and DLY END 0).

4. Check U301 for correct switching and delay level transfer. Vary the Delay Time and the Delta Delay time and check for smooth signal change at pins 12 and 13 of U301C. If not correct, troubleshoot DAC system or front panel controls.

5. Run diagnostics to check for Shift Register 1 (U302 and U303) failure.

6. Exercise SR 1 and check switching of U307, U308, U310, and U311.

Schematic Diagram 6—HORIZONTAL OUTPUT AMPLIFIER

1. Turn off the READOUT and check the ramps for equal (but opposite) waveforms on each plate. (Run MAKE FACTORY SETTINGS under the INTERNAL SETTINGS MENU in the SERVICE MENU.)

CAUTION

DO NOT short the horizontal output leads together or to ground. This will cause the output amplifier FETs to fail.

2. The MOSFET output transistors (Q801 and Q802, left plate; Q805 and Q806, right plate) run hot. If either side is cold, it is defective.

3. If output is all the way to one side or the other, check U801A and the common-mode feedback. This circuit is supposed to keep the outputs at about 70 V average to ground.

NOTE

Pins 12 and 13 of U802 may be shorted together to determine if the unbalance is before or after the horizontal preamplifier (U802). DO NOT short to ground.

4. Check the A RAMP and B RAMP input signals (A Horizontal mode for A RAMP and B Horizontal mode for B RAMP). They start at −2 V and ramp up to about +2.5 V.

5. Check the RO HORIZ input for correct waveform.

6. Check for the X AXIS input signal on pin 7 of U802 in X-Y mode (a signal must be applied to the CH 1 input).

7. Check at the junction of R855 and R854 (the common-mode bias point of Q810 and Q809) for 9.5 V.

8. Check at the junction of R846 and R852 (the common-mode source voltage of Q802 and Q805) for 15 V.

9. Check at the junction of R845 and R847 (the common-mode collector voltage of emitter followers Q803 and Q807) for 24 V.

10. Check the HD0 and HD1 signals to U802 (see Table 6-7 for display states).

11. The horizontal preamplifier, U802, runs warm to the touch, but not hot.

http://www.ebaman.com

Table 6-7

Horizontal Display State Logic

HD0	HD1	Display
0	0	Readout
0	1	A Sweep
1	0	B Sweep
1	1	X-Y

Schematic Diagram 7—Z-AXIS, CRT, PROBE ADJUST, AND CONTROL MUX

1. Turn off the Readout (READOUT control fully CCW) and test the node between CR2703 and C2711 for correct Z-Axis waveform. Vary INTEN to check operation. (Readout signals add confusion to the waveforms.)

2. Check for correct auto-focus operation at the junction of CR2715 and the collector of Q2712. Circuit action is exactly opposite of the Z-Axis to obtain focus tracking.

3. Parts replaced in the CRT High Voltage circuit and Z-Axis are safety controlled parts.

Replacements need to be exact. The power supply is capable of delivering more that 15 watts at high voltages.

Schematic Diagram 8—MEASUREMENT PROCESSOR

1. Check U2501, pin 57 for a RESET condition. Processor will be in permanent reset condition if RESET is high. Check that RESET goes high then low again at power on.

2. Check $\overline{\text{SYS RESET}}$ at U2506C pin 8.

3. Check that U2502 pin 5 is low when RESET is high. (This signal prevents random RAM writes on power-up and power-down when the processor is being reset.)

4. Check the 8 MHz clock (CLK 8M) at U2501 pin 56.

5. Check address decoding. Use a data analyzer or word recognizer probe set up to recognize the address that produces a selected enabling strobe from the address-decoding circuitry. Observe that the strobe is produced when the correct address is output by the Measurement Processor. The easiest way to generate most addresses during normal operation is to change a front-panel setting. See Table 6-8 for the addresses.

Schematic Diagram 9—READOUT SYSTEM

1. Run EXERCISE POTS (under the EXERCISER and FRONT PANEL menus) and check the digitized front panel pots for proper operation. The name of the exercised pot is displayed in the readout along with its current hexadecimal value. The value range from at or near 00 to at or near FF and the displayed value should change smoothly as the pot is rotated. EXERCISE POTS always displays the HORIZ POSITION pot when first called.

2. Check Readout Request pulse ($\overline{\text{RO REQ}}$, U2410 pin 14).

3. Check Readout Blanking signal ($\overline{\text{RO BLANK}}$, U2410 pin 16).

4. Check activity of Readout Processor (U2400).

5. Check outputs of Vertical and Horizontal Readout DACs (U2412 and U2413, respectively).

6. Check outputs of Vertical and Horizontal Readout Mixers (U2416A and U2416B, respectively) and multiplexers (U2414 and U2415, respectively).

Schematic Diagram 10—SWITCH BOARD AND INTERFACE

1. Run the EXERCISE SWITCHES exerciser and check each of the front panel switches for correct operation. The circuit number of the latest switch pressed is displayed in the readout.

2. Run the EXERCISE LEDS exerciser and check that each of the front panel LEDS may be turned on. The circuit number of the lighted LED is displayed in the readout.

Schematic Diagram 12—POWER SUPPLY

WARNING

For safety reasons, an isolation transformer must be connected whenever troubleshooting is done in the Preregulator and Inverter Power Supply sections of the instrument.

1. If the fuse blows, check that Q2201 is not shorted. (If a variac is available, slowly increase the line voltage from 0 V until the voltage across C2202 is about 40 V. If the same voltage is across C2203, Q2201 is probably shorted.)

2. If the Preregulator fails to come up (44 V not present across C2203):

   a. Check +DC at the output of the line rectifier bridge (across C2202) for approximately (Vac_{RMS} X 1.414).

   b. Check the Start-up circuit. The voltage across C2204 should ramp up to about 20 V, at which point Q2204 and Q2211 turn on to supply voltage to pin 10 of U2201.

   c. Check the Preregulator circuit. Voltage pulses with a repetition rate of about 25 µs should be present on pin 8 of U2201 whenever supply voltage is present on pin 10.

3. If the power supply is in the chirp mode (continually restarting and shutting down), excessive loading of the +44 V supply is probable.

http://www.tobaman.com

Table 6-8
Measurement Processor I/O Memory Map

Address range (A19 - A0) Binary	Signal name and description	Signal source
0110 0000 0000 0XXX XXXX	$\overline{\text{LED CATH CLK}}$ —Latches cathode data to Front-Panel LEDs.	U2501 pin 25 (Diagram 8)
0110 0000 0000 1XXX XXXX	$\overline{\text{LED ANODE CLK}}$—Latches anode data to Front-Panel LEDs.	U2501 pin 27 (Diagram 8)
0110 0000 0001 0XXX XXXX	$\overline{\text{RO BUF WR}}$ —Latches Readout Processor control datas.	U2501 pin 28 (Diagram 8)
0110 0000 0001 1XXX XXXX	$\overline{\text{RO BUF RD}}$—Enables Readout RAM data onto bus D0-D7 (used for diagnostics only).	U2501 pin 29 (Diagram 8)
0110 0000 0010 0XXX X000	$\overline{\text{DAC LSB CLK}}$—Latches the least significant byte of data to the D-to-A Converter.	U2517 pin 15 (Diagram 8)
0110 0000 0010 0XXX X001	$\overline{\text{DAC MSB CLK}}$ —Latches the most significant byte of data to the D-to-A Converter.	U2517 pin 14 (Diagram 8)
0110 0000 0010 0XXX X010	$\overline{\text{POT MUX CLK}}$ —Latches channel selection code for pot multiplexer.	U2517 pin 13 (Diagram 8)
0110 0000 0010 0XXX X010	$\overline{\text{SNAP CLK}}$ —Selects whether control of CH 1-CH 4 POSITION, TRACE SEP, A INTEN, B INTEN, and READOUT are controlled by front-panel pots or fixed resistor dividers.	U2517 pin 12 (Diagram 8)
100X XXXX XXXX XXXX X000	$\overline{\text{MB CNTL WR}}$ —Write enables Processor Interface circuitry (Diagram 4).	U2518 pin 15 (Diagram 8)
100X 0000 XXXX XXXX X000	Sets BEAM FIND (U503 pin 7) high ON.	U503 pin 7 (Diagram 4)
100X XXXX XXXX XXXX X001	$\overline{\text{SW BD SR LOAD}}$ —Loads column data into switch board registers.	U2518 pin 14 (Diagram 8)
100X XXXX XXXX XXXX X010	$\overline{\text{SW BD SR SHIFT}}$ —Shifts data in switch board registers to the SW BD DATA signal line.	U2518 pin 13 (Diagram 8)
100X XXXX XXXX XXXX X011	$\overline{\text{SLIC WR}}$ —Write to SLIC, U600 Diagram 4.	U2518 pin 12 (Diagram 8)

http://www.tbaman.com

Table 6-8 (cont)
Measurement Processor I/O Memory Map

Address range (A19 - A0) ←— Binary —→	Signal name and description	Signal source
100X XXXX XXXX XXXX X100	$\overline{\text{FLIC WR}}$ —Write to FLIC, U602 Diagram 4.	U2518 pin 11 (Diagram 8)
100X 0001 XXXX XXXX X000	SR 0 CLK—Clock Shift Register 0.	U606F pin 12 (Diagram 4)
100X 0010 XXXX XXXX X000	SR 1 CLK—Clock Shift Register 1.	U606B pin 4 (Diagram 4)
100X 0011 XXXX XXXX X000	Sets BEAM FIND (503 pin 7) low (OFF).	U503 pin 7 (Diagram 4)
100X 0011 XXXX XXXX X000	Sets MSEL (U602 pin 29) low (delta or long delay).	U503 pin 13 (Diagram 4)
100X 0100 XXXX XXXX X000	Sets MSEL (U602 pin 29) high reference or short delay).	U503 pin 13 (Diagram 4)
100X 0101 XXXX XXXX X000	Sets SR DATA signal line low.	U606C pin 6 (Diagram 4)
100X 0110 XXXX XXXX X000	Sets SR DATA signal line high.	U606C pin 6 (Diagram 4)
100X 0111 XXXX XXXX X000	Places SR 2 in shift mode (U502 pin 10, Diagram 4).	U2512 pin 5 (Diagram 8)
100X 1XXX XXXX XXXX X000	A places SR 2 in load mode (U502 pin 10, Diagram 4).	U2512 pin 5 (Diagram 8)
100X 1111 XXXX XXXX X011	$\overline{\text{TRIG CLK}}$ —Loads coupling data to triggers.	U600 pin 19 (Diagram 4)
1010 XXXX XXXX XXXX XXXX	Chip enable for Measurement Processor RAM (U2521 pin 20).	U2501 pin 36 (Diagram 8)

http://www.ebamar.com

WARNING

To avoid electrical shock, always disconnect the instrument from the ac power source before removing or replacing components.

a. Check that Q2209 and/or Q2210 are not shorted. Open W2201 and connect the positive lead of an ohmmeter to either collector and the negative lead to the emitters. Readings of less than 100 Ω indicate a probable short. If a short is found, it will be necessary to unsolder one of the collector leads to determine which transistor is shorted. Reconnect W2201 when done.

b. Check the secondary supplies for excessive loading. Measure from each supply to ground using an ohmmeter at a low range (one that will forward bias diodes, usually around the 1 kΩ range). Use the following as a guideline:

Supply	Nominal Resistance Ohms
+5 V	100
−5 V	50
−15 V	500
+15 V	400
+7.5 V	150
−7.5 V	180
+58 V	7500
+130 V	9000

http://www.ebaman.com

TROUBLESHOOTING MEASUREMENT ERRORS

When certain measurement malfunctions occur, the symptoms usually indicate the circuit components that may be causing the problems. Verify all the following conditions, and then use Table 6-9 for locating the source of measurement-error problems.

Conditions:

All vertical channels can be successfully displayed and positioned independently.

The A and B sweeps both free-run and trigger successfully.

Both A and B Trigger COUPLING and SOURCE operate properly.

Normal-appearing readout text and cursors can be displayed.

Measurement value accuracy is the accuracy of number displayed in top line of readout on the crt.

Measurement cursor accuracy is the accuracy of the match between cursor position and the measurement value.

Table 6-9
Measurement Error Troubleshooting Hints

Circuit Problem	Symptoms
VERTICAL INPUTS (Schematic Diagram 1)	
Ground relay stuck in signal position	Gross value problems for volts measurement.
	Test: Use "EXERCISE VOLT REF." Check that the ground relay is in ground position.
Defective X10, X100, X1, X2, X5 Relays and Attenuators	Gross value problems for affected channel for volts measurement.
	Test: Check channel accuracy at all VOLTS/DIV settings.
$\overline{\text{RO FREEZE}}$ line stuck high (U173-11)	Gross cursor problems for volts measurement.
	Test: Monitor during SELF CAL. Signal line should reach TTL low.

Table 6-9, (cont)
Measurement Error Troubleshooting Hints

Circuit Problem	Symptoms
VERTICAL PREAMP AND OUTPUT AMPLIFIER (Schematic Diagram 2)	
Preamp Trig Outputs Bad	Test: Check B triggering on the affected channel.
Preamp Vert Outputs or Enable Bad	Gross value accuracy problems for volts measurement for affected channel.
	Test: With only the affected channel selected for display, check that channel is shown and check gain accuracy.
VERT COMP output (U702-7)	Gross value problems with volts measurement.
	Test: Lift W1101 and ground the base of Q703. VERT COMP should be toggling between TTL high and TTL low either with readout on or with two channels on (one at screen top, one at screen bottom).
A AND B TRIGGER SYSTEM (Schematic Diagram 3)	
A Trig Source Multiplexer (U421A)	"SEARCH FAILED AT 5 μs" for "SELF CAL" on time measurements unless stuck in LINE.
	Test: Set A Trigger SOURCE to VERT. For each channel, display only that channel and check that the signal applied to the displayed channel appears at pin 25 of U421.
A Trig Cplg Multiplexer (U421B)	May get "SEARCH FAILED at . . ." for "SELF CAL" on time measurements if coupling is stuck in HF REF coupling.
	Test: Switch between all A Trigger COUPLING settings with a 10 kHz square wave connected to CH 1 input; use CH 1 for the A Trigger SOURCE and set A Trigger SLOPE to ⌝⌞ . Check signal at U421 pin 25 (square edge for DC or NOISE REJ; rounded corner for HF REJ; spiked corner for LF REJ; signal center shifts to ground for AC).
A Trig line stuck high or low (U421C-10)	"SEARCH FAILED AT 5 μs for SELF CAL" on time measurements.
	Test: Set the A Trigger MODE to NORM. Check that the sweep can be triggered on the Channel 1 signal.

http://www.tebaiman.com

Table 6-9, (cont)
Measurement Error Troubleshooting Hints

Circuit Problem	Symptoms
B Trig Source Multiplexer (U431A)	"SEARCH RETURNED BAD VALUE AT . . . " on time measurements (unless stuck in LINE SOURCE).
	Test: Set B Trigger SOURCE to VERT. For each channel, display only that channel and check that the signal applied to the displayed channel appears at U431 pin 25.
BW FULL B line (U1103-14)	Test: Should be CMOS low when SCOPE BW button is lit. Should be CMOS high when SCOPE BW button is not lit; use ALT Horizontal MODE with B CPLG set to DC.
B Trig (U431C)	"SEARCH RETURNED BAD VALUE AT . . ." on time measurements.
$\overline{\text{VERT COMP EN}}$ line stuck high (U1103-7)	See notes on "VERT COMP" (schematic diagram 2).
	Test: $\overline{\text{VERT COMP EN}}$ should be at CMOS high in normal use. Run "SELF CAL" and check that $\overline{\text{VERT COMP EN}}$ goes to a CMOS low.
LINE/TIME BASE CAL signal Mux stuck in LINE position (U1106A)	"RETURNED BAD SEARCH VALUE AT . . ." from "SELF CAL" for time measurements.
	Test: Run "EXERCISE TIME REF" diagnostic and check the output of U1106A (pin 1) for changing signal.
DISPLAY AND TRIGGER LOGIC AND PROCESSOR INTERFACE (Schematic Diagram 4)	
MB RETURN line (U502-12)	See notes on VERT COMP (schematic diagram 2).
MP DLY SEL line (U503-13) or MP DLY SEL Interface (U602)	"SEARCH RETURNED BAD VALUE AT 5 µs" on time measurements.
	Test: Turn all measurements off. Use the A Horizontal MODE. The MP DLY SEL signal should be at a TTL high.
SR DATA line (U606C-6)	Effects are the same as those caused by malfunctions in SR 0 and SR 1.
	Test: The A Sweep rate changes when SEC/DIV knob is rotated in the A Horizontal MODE.
SR 0 CLK line (U606F-12)	Effects are the same as those caused by malfunctions in SR 0.
	Test: Channel 1 sensitivity changes when CH 1 VOLTS/DIV knob is rotated.

http://www.tabarnan.com

Table 6-9, (cont)
Measurement Error Troubleshooting Hints

Circuit Problem	Symptoms
SR 1 CLK line (U606B-4)	Effects same as those caused by malfunctions in SR 1.
	Test: Check that the A Sweep rate changes when SEC/DIV knob is rotated in the A Horizontal MODE.
SR 1 CLK TTL line (U501-13)	Effects same as those caused by malfunctions in auxiliary section of SR 1 (U1103, diagram 3).
	Test: HF noise in trace reduces when SCOPE BW button is lit and increases when not lit.
Processor-to-Display-Sequencer Interface (U600)	Gross effects on all voltage and time measurements.
	Test: Run DIAGNOSE and note results of SLIC CONTROL REG test. Set the A Trigger MODE to NORM; check that the ATS 0-2 signal lines (pins 31-33) change when the A Trigger SOURCE is changed.
TDO Level Shifter (U603, Q603, Q602)	Same as Processor-to-Display-Sequencer Interface problem.
	Test: Using NORM mode for both triggers, VERT source for both triggers, and CH 1 only displayed; apply a four-division, square-wave signal to the CH 1 input. In the A Horizontal mode, check that the TRIG'D LED light goes off and the sweep stops running with the Trigger LEVEL control at full CW rotation. Change to AUTO mode for A trigger; check that sweep free-runs with the Trigger LEVEL control at full CW rotation. Check that the TRIG'D LED can be lit and the sweep can be triggered when the Trigger LEVEL is set to within the signal limits. Keep the A Sweep triggered for the next check. In B Horizontal mode, check that the TRIG'D LED goes off, and the sweep stops running with the Trigger LEVEL control set at full CW rotation. Check that the TRIG'D LED can be lit and the sweep made to trigger when Trigger LEVEL is set to within the signal limits. Change to RUNS AFTER Mode for the B Trigger. Check that the B Sweep free-runs.

http://www.ebaman.com

Table 6-9, (cont)

Measurement Error Troubleshooting Hints

Circuit Problem	Symptoms
DLY SEL line stuck low (U602-32)	"SEARCH RETURNED BAD VALUE AT 5 µs" for "SELF CAL" on time measurements. Test: Use settings given in previous test. Set the first delay zone to the start of the sweep with ⇤ control. Check that the second delay zone can be positioned over the entire sweep length with the ⇥ control.
DLY SEL line stuck high (U602-32)	"SEARCH RETURNED BAD VALUE AT 0.1 ms" for "SELF CAL" on time measurements.
	Test: Use settings given in previous test. Set the first delay zone to the start of the sweep with ⇤ control. Check that the second delay zone can be positioned over the entire sweep length with the ⇥ control.
ATS 0-2 (U600, pins 31-33) A Trig Source Multiplexer	See notes on "A Trig Source Multiplexer" (schematic diagram 3).
BTS 0-2 (U600, pins 27-29) B Trig Source Multiplexer	See notes on "B Trig Source Multiplexer" (schematic diagram 3).
$\overline{\text{TRIG CLK}}$ line (U600-19)	See notes on "A Trig Cplg Multiplexer" (schematic diagram 3).
A AND B SWEEP AND DELAY COMPARATORS (Schematic Diagram 5)	
DLY END 0 line stuck low or high (U315-15)	"SEARCH RETURNED BAD VALUE AT 5 µs" for "SELF CAL" on time measurements.
	Test: Run the ⇤ TIME ⇥ measurement in ALT Horizontal Mode with the A SEC/DIV at 1 ms/div and the B SEC/DIV at 0.1 ms/div. Check that the first delay zone can be positioned over the length of sweep using the ⇤ control.
Ref/Delta Delay Muxes stuck (U301A & C)	See notes on DLY SEL (schematic diagram 4).
A Sweep Control circuit (U302 & U303)	"SEARCH RETURNED BAD VALUE AT (affected SEC/DIV setting)" for "SELF CAL" on time measurements.
	Test: Use "EXERCISE VOLT REF" diagnostic.

http://www.ebaman.com

Table 6-9, (cont)

Measurement Error Troubleshooting Hints

Circuit Problem	Symptoms
VOLT CAL 0-2 (U302 & U303)	Gross value problems with volts measurement.
	Test: Use "EXERCISE VOLT REF" diagnostic.
Z-AXIS, CRT, PROBE ADJUST, AND CONTROL MUX (Schematic Diagram 7)	
VOLT CAL line (U931-3)	Gross value problems with volts measurement.
	Test: Use "EXERCISE VOLT REF" diagnostic.
MEASUREMENT PROCESSOR (Schematic Diagram 8)	
TB CAL line (U2501-22)	"SEARCH FAILED AT SWEEP SPEED . . ." in "SELF CAL" on time measurements.
	Test: Use "EXERCISE TIME REF" diagnostic. Check that TB CAL signal is correct and signal path is intact to U421A pin 4 (diagram 3) through U1106A.
$\overline{\text{SLIC WR}}$ (U2518-12)	See notes on "Processor-to-Display-Sequencer Interface" (schematic diagram 4).
$\overline{\text{SLIC RD}}$ (U2503C-8)	See notes on "Processor-to-Display-Sequencer Interface" (schematic diagram 4).
$\overline{\text{FLIC WR}}$ (U2518-11)	See notes and tests on "TDO Level Shifter" (schematic diagram 4).
MB DATA (U2515-11)	See notes on "Processor-to-Display-Sequencer Interface" (schematic diagram 4).
Field & Mixer Control Latch or Readout Position Mixer stuck (U2411, U2414, U2415)	Gross cursor problems with volts measurement.
	Test: Run ⇤ VOLTS⇥ CURSOR Measurement mode with only CH 1 displayed. Check that cursors move the CH 1 position control. Check that ⇤ cursor moves with ⇤ control and ⇥ cursor moves with ⇥ control. Check that top and bottom line of readout do not move with any position control.

http://www.ebamall.com

Table 6-9, (cont)

Measurement Error Troubleshooting Hints

Circuit Problem	Symptoms
ADC, DAC SYSTEM (Schematic Diagram 11)	
A TRIG LVL (U2304C-8)	See notes for A Trig (schematic diagram 3).
	Test: Select A trigger, set A Trigger MODE to NORM. Check that A TRIG LVL can be set to any value from -2.5 to +2.5 volts using the Trigger LEVEL control.
B REF TRIG LVL (U2304B-7)	See notes for "B Trig" (schematic diagram 3).
	Test: Select B trigger, set B Trigger MODE to NORM, and select B Horizontal MODE.
REF DLY (U2305C-8)	"RETURNED BAD SEARCH VALUE AT . . ." for "SELF CAL" on time measurements.
	Test: Run ⊢TIME⊣ measurement in ALT Horizontal mode; A at 1 ms/div, B at 0.1 ms/div. Check that first delay zone can be positioned over length of sweep with the ⊢ control.
DELTA DELAY (U2305B-7)	"RETURNED BAD SEARCH VALUE AT . . ." for "SELF CAL" on on time measurements.
	Test: Use the preceding REF DLY settings, and set first delay zone to start of sweep with ⊢ control. Check that second delay zone can be positioned over length of sweep with ⊣ control.
REF CURSOR (U2304D-14)	Gross value problems with volts measurement.
	Test: Run ⊢ VOLTS⊣ CURSOR Measurement Mode. Check that ⊢ cursor can be positioned ±15 divisions around the trace ground.
DELTA CURSOR (U2304A-1)	Gross value problems with volts measurement.
	Test: Run ⊢ VOLTS⊣ CURSOR Measurement Mode. Check that ⊣ cursor can be positioned ±15 divisions around the trace ground level.

http://www.ebaman.com

CORRECTIVE MAINTENANCE

INTRODUCTION

Corrective maintenance consists of component replacement and instrument repair. This part of the manual describes special techniques and procedures that are needed to replace components in this instrument. If it is necessary to ship your instrument to a Tektronix Service Center for repair or service, refer to the Repackaging for Shipment information in this section.

MAINTENANCE PRECAUTIONS

To reduce the possibility of personal injury or instrument damage, observe the following precautions.

1. Disconnect the instrument from the ac-power source before removing or installing components.

2. Verify that the line-rectifier filter capacitors are discharged prior to performing any servicing.

3. Use care not to interconnect instrument grounds which may be at different potentials (cross grounding).

4. When soldering on circuit boards or small insulated wires, use only a 15-watt, pencil-type soldering iron.

CAUTION

Do not exceed 9 in-lb of torque when tightening the 6-32 screws.

5. Use care not to overtighten screws into chassis. Threads that have been formed directly into aluminum components can be stripped out. If this occurs, use a 6-32 nut to secure the screw.

WARNING

Portions of the power supply are floating at the ac line voltage level and pose a shock hazard if not isolated from ground.

6. Use an isolation transformer to supply power to the 2245A if you troubleshoot in the power supply with power applied to the instrument.

OBTAINING REPLACEMENT PARTS

Electrical and mechanical replacement parts can be obtained through your local Tektronix Field Office or representative. However, many of the standard electronic components may be obtained from a local commercial source. Before purchasing or ordering a part from a source other than Tektronix, Inc., please check the Replaceable Electrical Parts list for the proper value, rating, tolerance, and description.

NOTE

The physical size and shape of a component may affect instrument performance, particularly at high frequencies. Always use direct-replacement components, unless it is known that a substitute will not degrade instrument performance. Parts in the crt high-voltage and Z-Axis circuits are safety-controlled—USE EXACT REPLACEMENTS in these circuits.

Special Parts

In addition to the standard electronic components, some special parts are used in the 2245A. These components are manufactured or selected by Tektronix, Inc. to meet specific performance requirements, or are manufactured for Tektronix, Inc. in accordance with our specifications. The various manufacturers can be identified by referring to the Cross Index-Manufacturer's Code number to Manufacturer at the beginning of the Replaceable Electrical Parts list (Section 8). Most of the mechanical parts in this instrument are manufactured by Tektronix, Inc. Order all special parts directly from your local Tektronix Field Office or representative.

http://www.ebaman.com

Ordering Parts

When ordering replacement parts from Tektronix, Inc., be sure to include all of the following information:

1. Instrument type (include modification or option numbers).
2. Instrument serial number.
3. A description of the part (if electrical, include its full circuit component number).
4. Tektronix part number.

REPACKAGING FOR SHIPMENT

Save the original carton and packing material for reuse if the instrument should have to be reshipped on a commercial transport carrier. If the original materials are unfit or not available, repackage the instrument as follows:

1. Use a corrugated cardboard shipping carton with a test strength of at least 275 pounds and with an inside dimension at least six inches greater than the instrument dimensions.
2. If instrument is being shipped to a Tektronix Service Center, enclose the following information: the owner's address, name and phone number of a contact person, type and serial number of the instrument, reason for returning, and a complete description of the service required.
3. Completely wrap the instrument with polyethylene sheeting or equivalent to protect the outside finish and prevent entry of foreign materials into the instrument.
4. Cushion the instrument on all sides, using three inches of padding material or urethane foam tightly packed between the carton and the instrument.
5. Seal the shipping carton with an industrial stapler or strapping tape.
6. Mark the address of the Tektronix Service Center and also your own return address on the shipping carton.

MAINTENANCE AIDS

The maintenance aids listed in Table 6–10 include items required for performing most of the maintenance procedures in this instrument. Equivalent products may be substituted for the examples given if their characteristics are similar.

INTERCONNECTIONS

Several types of mating connectors are used for the interconnecting cable pins. The following information gives the replacement procedures for the various connectors:

End-Lead Pin Connectors

Pin connectors used to connect the wires to the interconnect pins are factory assembled. They consist of machine-inserted pin connectors mounted in plastic holders. If the connectors are faulty, the entire wire assembly should be replaced.

Ribbon-Cable Connectors

The etch-ribbon cables have the connector pins crimped onto the wire runs. If the connectors are defective, the entire ribbon cable assembly must be replaced.

http://www.bbaman.com

Table 6-10
Maintenance Aids

Description	Specification	Usage	Example
Soldering Iron	15 to 25 W.	General soldering and unsoldering.	Antex Precision Model C.
Torx Screwdriver Tips and Handle	Torx tips: #T7, #T9, #T10, #T15, and #T20. Handle: 1/4 inch hex drive.	Assembly and disassembly.	Tektronix Part Numbers: #T7 003-1293-00 #T9 003-0965-00 #T10 003-0814-00 #T15 003-0966-00 #T20 003-0866-00 Handles: 8 1/2 in. 003-0293-00 3 1/2 in. 003-0445-00
Nutdrivers	1/4 inch, 5/16 inch, 1/2 inch, and 9/16 inch.	Assembly and disassembly.	Xcelite #8, #10, #16 and #18.
Open-end Wrench	9/16 inch and 1/2 inch.	Channel Input and Ext Trig BNC Connectors	Tektronix Part Numbers: 9/16) 003-0502-00 1/2) 003-0822-00
Hex Wrenches	0.050 inch, 1/16 inch.	Assembly and disassembly.	Allen wrenches.
Long-nose Pliers		Component removal and replacement.	Diamalloy Model LN55-3.
Diagonal Cutters		Component removal and replacement.	Diamalloy Model M554-3.
Vacuum Solder Extractor.	No Static Charge Retention.	Unsoldering static sensitive devices and components on multi-layer boards.	Pace Model PC-10.
Contact Cleaner	No-Noise.®	Switch and pot cleaning.	Tektronix Part Number 006-0442-02.
Pin-replacement Kit		Replace circuit board connector pins.	Tektronix Part Number 040-0542-01.
IC-removal Tool		Removing DIP IC packages.	Augat T114-1.
Isopropyl Alcohol	Reagent grade.	Cleaning attenuator and front-panel assemblies.	2-Isopropanol.
Isolation Transformer		Isolate the instrument from the ac power source for safety.	Tektronix Part Number 006-5953-00.
1X Probe		Power supply ripple check.	TEKTRONIX P6101A.

http://www.ebaman.com

LITHIUM BATTERY (B2501)

The lithium battery used to supply backup power to the System RAM should last for at least 3 years. However, when it becomes necessary to replace the battery, be sure to observe the following general warning about disposal of lithium batteries.

WARNING

To avoid personal injury, observe proper procedures for handling and disposal of lithium batteries. Improper handling may cause fire, explosion, or severe burns. Do not recharge, crush, disassemble, heat the battery above 212°F (100°C), incinerate, or expose contents of the battery to water. Dispose of battery in accordance with local, state, and national regulations.

Typically, small quantities (less than 20) can be safely disposed of with ordinary garbage in a sanitary landfill. Larger quantities must be sent by surface transport to a hazardous waste disposal facility. The batteries should be individually packaged to prevent shorting and packed in a sturdy container that is clearly labeled "Lithium Batteries—DO NOT OPEN."

TRANSISTORS AND INTEGRATED CIRCUITS

Transistors and integrated circuits should not be replaced unless they are actually defective. If one is removed from its socket or unsoldered from the circuit board during routine maintenance, return it to its original board location. Unnecessary replacement or transposing of semiconductor devices may affect the adjustment of the instrument. When a semiconductor is replaced, check the performance of any circuit that may be affected.

Any replacement component should be of the original type or a direct replacement. Bend component leads to fit their circuit board holes, and cut the leads to the same length as the original component. See Figure 9-2 in the Diagrams section for the semiconductor lead-configurations.

CAUTION

After replacing a power transistor, check that the collector is not shorted to the chassis before applying power to the instrument.

To remove socketed dual-in-line packaged (DIP) integrated circuits, pull slowly and evenly on both ends of the device. Avoid disengaging one end of the integrated circuit from the socket before the other, since this may damage the pins.

To remove a soldered DIP IC when it is going to be replaced, clip all the leads of the device and remove the leads from the circuit board one at a time. If the device must be removed intact for possible reinstallation, do not heat adjacent conductors consecutively. Apply heat to pins at alternate sides and ends of the IC as solder is removed. Allow a moment for the circuit board to cool before proceeding to the next pin.

SOLDERING TECHNIQUES

The reliability and accuracy of this instrument can be maintained only if proper soldering techniques are used to remove or replace parts. General soldering techniques that apply to maintenance of any precision electronic equipment should be used when working on this instrument.

WARNING

To avoid an electrical-shock hazard, observe the following precautions before attempting any soldering: turn the instrument off, disconnect it from the ac power source, and wait at least three minutes for the line-rectifier filter capacitors to discharge.

Use rosin-core wire solder containing 63% tin and 37% lead. Contact your local Tektronix Field Office or representative to obtain the names of approved solder types.

When soldering on circuit boards or small insulated wires, use only a 15-watt, pencil-type soldering iron. A higher wattage soldering iron may cause etched circuit conductors to separate from the board base material and melt the insulation on small wires. Always keep the soldering-iron tip properly tinned to ensure the best heat transfer from the tip to the solder joint. Apply only enough solder to make a firm joint. After soldering, clean the area around

http://www.ebaman.com

the solder connection with an approved flux-removing solvent (such as isopropyl alcohol) and allow it to air dry.

CAUTION

Only an experienced maintenance person, proficient in the use of vacuum-type desoldering equipment should attempt repair of any circuit board in this instrument. Many integrated circuits are static sensitive and may be damaged by solder extractors that generate static charges. Perform work involving static-sensitive devices only at a static-free work station while wearing a grounded antistatic wrist strap. Use only an antistatic vacuum-type solder extractor approved by a Tektronix Service Center.

CAUTION

Attempts to unsolder, remove, and resolder leads from the component side of a circuit board may cause damage to the reverse side of the circuit board. The following techniques should be used to replace a component on a circuit board:

1. Touch the vacuum desoldering tool tip to the lead at the solder connection. Never place the tip directly on the board; doing so may damage the board.

NOTE

Some components are difficult to remove from the circuit board due to a bend placed in the component leads during machine insertion. To make removal of machine-inserted components easier, straighten the component leads on the reverse side of the circuit board.

2. When removing a multipin component, especially an IC, do not heat adjacent pins consecutively. Apply heat to the pins at alternate sides and ends of the IC as solder is removed. Allow a moment for the circuit board to cool before proceeding to the next pin.

CAUTION

Excessive heat can cause the etched circuit conductors to separate from the circuit board. Never allow the solder extractor tip to remain at one place on the board for more than three seconds. Solder wick, spring-actuated or squeeze-bulb solder suckers, and heat blocks (for desoldering multipin components) must not be used. Damage caused by poor soldering techniques can void the instrument warranty.

3. Bend the leads of the replacement component to fit the holes in the circuit board. If the component is replaced while the board is installed in the instrument, cut the leads so they protrude only a small amount through the reverse side of the circuit board. Excess lead length may cause shorting to other conductive parts.

4. Insert the leads into the holes of the board so that the replacement component is positioned the same as the original component. Most components should be firmly seated against the circuit board.

5. Touch the soldering iron tip to the connection and apply enough solder to make a firm solder joint. Do not move the component while the solder hardens.

6. Cut off any excess lead protruding through the circuit board (if not clipped to the correct length in step 3).

7. Clean the area around the solder connection with an approved flux-removing solvent. Be careful not to remove any of the printed information from the circuit board.

REMOVAL AND REPLACEMENT INSTRUCTIONS

WARNING

To avoid electrical shock, disconnect the instrument from the power input source before removing or replacing any component or assembly.

The exploded-view drawings in the Replaceable Mechanical Parts list may be helpful during removal

http://www.ebaman.com

and reinstallation of individual components or sub-assemblies. Circuit board and component locations are shown in the Diagrams section.

Read these instructions before attempting to remove or install any components.

Cabinet

To remove the cabinet:

1. Unplug the power cord from its rear-panel connector.
2. Place the instrument face down on a clean, flat surface.
3. Remove the Torx-head screw from the right side near the rear of the cabinet.
4. Remove the plastic rear cover, held with four Torx-head screws.
5. Slide the cabinet housing up and off the instrument.

WARNING

Potentially dangerous voltages exist at several points throughout this instrument. If it is operated with the cabinet removed, do not touch exposed connections or components. Before replacing parts or cleaning, disconnect the ac-power source from the instrument and check that the line-rectifier filter capacitors have discharged. Also, check the low voltages at the Power-Supply/Main-Board interface connector (J1024). If any of the supply-voltage or line-voltage filter capacitors remain charged for more that 20 seconds, discharge them to ground through a 1 kΩ, 5- or 6-watt resistor.

To install the cabinet:

6. Carefully slide the cabinet housing over the rear of the instrument. Be careful not to snag any of the folded ribbon cables. Make sure the cabinet housing slides between the plastic front-panel housing and the instrument chassis.
7. Install the rear panel. Secure it with four #15 Torx-head screws.
8. Install a Torx-head screw in the right side of the cabinet.

Crt Removal and Replacement

WARNING

Use care when handling a crt. Breaking the crt can cause high-velocity scattering of glass fragments. Protective clothing and safety glasses or safety face shield should be worn. Avoid striking the crt on any object which might cause it to crack or implode. When storing a crt, either place it in a protective carton or set it face down on a smooth surface in a protected location with a soft mat under the faceplate.

To remove the crt:

WARNING

To avoid electrical shock, carefully discharge the crt anode lead directly to the metal chassis. To avoid static-discharge damage to electronic components, do not allow the anode lead to discharge into the adjacent circuitry.

1. Disconnect the high-voltage anode lead. Pull the anode-lead coupler apart slowly and carefully. DO NOT touch the exposed connector pin as it is withdrawn from coupler socket. Discharge the exposed anode pin to the metal chassis only. A hole is provided in the left side of the power supply chassis for the purpose of holding the end of the lead to prevent a recharge while it is disconnected.
2. Unplug the trace rotation cable (P27) from the Main board.
3. Unplug the two vertical and the two horizontal deflection leads from the crt neck. Grasp each lead connector with long-nosed pliers and pull it straight away from the crt neck pins. Be careful not to bend the neck pins.
4. Remove the crt implosion shield and bezel frame (held with two screws at the lower side).

http://www.ebaman.com

5. Place your left hand on the crt neck shield and your right hand over the crt face. Move the crt assembly forward to unplug the crt from its socket and carefully withdraw it from the instrument while ensuring that the crt anode lead clears all obstructions. Do not hold the crt assembly by the shield only.

6. If it is necessary remove the metal shield from crt, carefully slide the shield to the rear of the crt. Be careful not to damage the neck pins.

To install the crt:

7. Install the metal shield over the neck of the crt. Make sure that the plastic grommet is in place over the front of the shield. Align the neck pins with the shield holes.

8. Check that the graticule scale-illumination light pipe is in place at bottom front of crt opening. Also make sure that the four crt corner cushions are in place in the crt opening of the subpanel.

9. Carefully guide the crt, anode lead, and trace rotation cable into the instrument. Line up the crt base pins with base socket. Make sure that the ground clip above the rear of the crt shield goes outside of the shield. Hold in on the rear of the base socket with one hand and push on the face of the crt with the other hand to completely seat the crt base pins. If the crt will not go in all the way, check for bent pins. DO NOT FORCE this connection!

10. Connect the trace rotation cable (P27) to the Main board.

11. Connect the vertical and horizontal deflection leads to the crt neck pins. The horizontal deflection leads (going to bottom pins) should be crossed.

12. Connect the high-voltage anode lead.

13. Install the crt implosion shield and frame using two 7/8 in. Torx-head screws.

14. Check that the graticule illumination light bulbs are in place in the light pipe at the bottom of the crt.

BNC Connectors (Vertical Inputs)

To replace BNC Connectors:

1. Remove the Main board (see Main board removal procedure).

NOTE

Do not disconnect the ends of the delay line from board as indicated in the Main board removal procedure. It is not necessary for replacing the input BNC connectors.

2. Using a 9/16 open-end wrench, remove and replace the defective BNC connector(s).

3. Replace the Main board (see Main board installation procedure).

A16 Processor Board

To remove the Processor board:

1. Unplug ribbon cables J2501, J18pin, J17pin, and J25pin from the the processor board. To aid the release of the ribbon-cable pins from connector, slide a thin-shafted, flat-bladed screwdriver between the ribbon cable (near the connector) and the etched-circuit board and pry gently upward.

2. Remove the six Torx-head attaching screws (one at each corner and two in the middle).

3. Unplug J2501 (17-pin) from the Potentiometer board and lift the Processor board out of the instrument.

To install the Processor board:

CAUTION

Do not exceed 9 in-lb of torque when tightening the 6-32 screws that hold the circuit board to the chassis. Damage to the circuit board and/or screw threads may result if the screws are overtightened.

4. Position the board to align the screw holes and install the six Torx-head attaching screws (two, 5/8 in. screws in the center and one, 7/16 in. screw at each corner).

5. Plug in ribbon cables J20pin, J17pin, J18pin, J17pin, and J25pin. Press the ribbon cable pins firmly into the connector holes.

http://www.ebaman.com

A18 Power Supply Board

To remove the Power Supply board:

1. Remove the Processor board (see Processor board removal procedure).

WARNING

To avoid electrical shock, carefully discharge the crt anode lead directly to the metal chassis. To avoid static-discharge damage to electronic components, do not allow the anode lead to discharge into the adjacent circuitry.

2. Disconnect the high-voltage anode lead. Pull the anode-lead coupler apart slowly and carefully. DO NOT touch the exposed connector pin as it is withdrawn from coupler socket. Discharge the exposed anode pin to the metal chassis only. A hole is provided in the left side of the power supply chassis for the purpose of holding the end of the lead to prevent a recharge while it is disconnected.

3. Remove the eight screws holding the power supply housing shield and remove the shield.

4. Disconnect the connectors from J2208 and J2225 and the two wires from ac-line filter. (Note the color stripes on the wires to the line filter for reinstallation.)

5. Pull the HV connector through the grommet in the power supply housing.

6. Set the POWER switch in the OFF (out) position.

CAUTION

The POWER switch must be in the OFF position to safely remove the shaft from the shaft of the switch in the following step. Pulling the shaft off with the POWER switch on may damage the switch shaft and spring assembly.

7. Remove the power-switch-extension shaft. Snap the extension shaft off the transitional pivot assembly, then pull the shaft off the switch.

8. Remove the six screws that hold down the Power Supply board.

9. Unplug the Power Supply board from the Main board interface connector. Grasp the two heat sinks near the center of the board, one with each hand, and pull up to disconnect the interface connection.

10. Lift the front of Power Supply board and withdraw the board from the power-supply housing.

To install the Power Supply board:

11. Place the Power Supply board into power-supply housing. First, guide the fuse holder into the rear panel, then lower the front end of the board until the board interface pins touch the interface connector.

12. Plug the interface pins into the interface connector. With the Power Supply board against the rear panel, pull up on the large electrolytic capacitor (near the center of the board) with one hand and push down on HV multiplier module (at front of board) with the other hand. This action tends to align the pins with the connector. At the same time you will have to move the board around slightly so that the pins will easily slide into the connector holes. DO NOT FORCE this connection, otherwise you may bend the pins.

http://www.ebaman.com

CAUTION

Do not exceed 9 in-lb of torque when tightening the 6-32 screws that hold the circuit board to the chassis. Damage to the circuit board or screw threads may result if the screws are overtightened.

13. Secure the circuit board with six screws.

14. Install the power-switch-extension shaft. Snap the shaft onto the switch, then onto the transitional pivot assembly.

15. Insert the high-voltage lead through the power-supply-housing grommet and snap the connector shell into the clamp at the front of the power-supply housing.

16. Connect the leads to J2208, J2225, and the ac-line filter (observe the color coding noted when the filter leads were disconnected).

17. Install the power-supply-housing shield with eight screws.

18. Connect the crt anode lead to the HV connector.

19. Install the Processor board (see Processor board installation instructions).

Potentiometer/Switch board Assembly

To remove the Potentiometer/Switch board assembly:

1. Unplug ribbon-cable connector P2501 from the Processor board and unplug ribbon-cable connector P2105 from the Potentiometer board.

2. Remove the CH 1 and CH 2 VOLTS/DIV VAR knobs and the SEC/DIV VAR knob. (A 1/16 in. hexagonal wrench is needed for the set screws).

3. Pull out all the remaining front-panel knobs to the right of the crt. Grasp the knobs firmly and pull straight out from the front panel.

4. Pull out on the four captive plastic snap fasteners on the back of the Switch board that hold the Switch board assembly to the front panel (not those that hold the Potentiometer board to the Switch board). Use long-nose pliers as necessary to reach the fasteners.

5. Unclip the high-voltage connector from the front of the power-supply housing. Remove the plastic retaining clip from the housing (it is pressed in). Move the high-voltage connector to the top of the power-supply housing to make room for removing the Potentiometer/Switch board.

6. Move the Potentiometer/Switch board assembly back away from the front panel and lift it out of the instrument.

To separate the A12 Potentiometer board from the Switch board:

7. Pull out on the three snap fasteners that hold the Potentiometer board to the Switch board.

8. Separate the Potentiometer board from the Switch board.

9. If necessary, unplug the VAR control shafts from their potentiometers.

To install the Potentiometer board:

10. Set the three snap fasteners on the board in the released (out) position.

11. Plug the three VAR control shafts onto the VAR potentiometers.

12. Set the Potentiometer board in place over the Switch board and press in on the snap fasteners.

To install the Potentiometer/Switch board assembly:

13. Set the four snap fasteners (on the Switch board) in the released (out) position.

14. Guide the Potentiometer/Switch board assembly into place behind the front panel and press in on the snap fasteners.

15. Install the control knobs. Push knobs in while rotating slightly until they align with the shaft and snap in place. The two knobs without a position-indicator rib go on the ⇤ and ⇥ control shafts.

16. Install the three VAR control knobs, using 1/16 in. allen wrench. Make sure that VAR controls are in the detent (fully CW) position, then rotate the knobs so that the VAR label is horizontal before tightening the set screws.

17. Install the high-voltage connector clip to the front side of the power-supply housing and snap the connector shell into it.

18. Connect ribbon cable J2105 to the Potentiometer board and P2501 to the Processor board. Position the connector pins in the socket holes and push them fully into place.

A10 Main Board

NOTE

This procedure is intended for the complete replacement of the Main board. All repairs and component replacements (except BNC connectors) can be done without completely removing the Main board. When replacing BNC connectors, use the BNC Connector replacement procedure previously given in this section.

http://www.tbaman.com

To remove the Main board:

1. Remove the crt (see crt removal procedure).

2. Pull out and remove the five crt-display control knobs.

3. Remove the Processor board (see Processor board removal procedure).

4. Remove the shield from the power-supply housing (held with eight screws).

5. Unplug the three-wire cable from J2208 on the Power Supply board. Pull the cable and connector through the plastic grommet.

6. Release the crt socket from its holder on the rear panel. First pull off clear plastic socket retainer, then push the socket out the rear enough to turn it sideways and push it through to the inside of the instrument.

7. Remove the Potentiometer/Switch board assembly (see Potentiometer/Switch board assembly removal procedure).

8. Remove the top and bottom attenuator shields. The bottom shield is held with five screws and the top shield is held with one remaining screw. See Figure 6-4.

NOTE

If the Main board is being removed to replace or repair a component (such as a BNC connector), it is not necessary to disconnect the delay line from the board as indicated in the following step.

9. Unsolder the main delay-line wires from both sides of board (see Figures 6-4 and 6-5).

10. Unclip the delay line from both sides of the board and from the two clips at the lower side of the rear panel. Remove the two clips from the rear panel.

11. Remove the ten screws that hold the Main board to the chassis. Back out the three screws going through the rear panel enough to allow removal of Main board. See Figure 6-4.

12. Pull the three ribbon cables through to the bottom of the instrument.

13. Lift the back of Main board enough to disconnect interface connection between Main board and Power Supply board.

14. Slide the Main board back away from the front panel to completely remove the board from the instrument.

To install the Main board:

15. Guide the BNC connectors at front of the Main board into the holes in the front panel. Make sure that you guide the PROBE ADJUST jack into the front panel as well as the BNC connectors.

16. Lower the rear of Main board while guiding the interface connector onto the power supply interface pins. DO NOT FORCE this connection; the pins may bend. Make sure that the grommet holding the crt and power supply wires is in place between the board and the rear panel.

http://www.ebaman.com

CAUTION

Do not exceed 9 in-lb of torque when tightening the 6-32 screws that hold the circuit board to the chassis. Damage to the circuit board or screw threads may result if the screws are overtightened.

17. Secure the Main board with ten screws. See Figure 6-4.

18. Solder both ends of delay line to Main board. Be sure to observe the polarity of the leads. See Figures 6-4 and 6-5. Press the ends of delay line into the clips on board.

19. Snap the two plastic clips into the lower edge of the rear panel and snap the delay line into them.

20. Connect the three-wire cable from the crt-socket cable assembly to J2208 on the Power Supply board.

21. Install the shield on the power-supply housing (eight screws).

22. Install the inside attenuator shield (secure with one screw). Then install the outside attenuator shield (secure with five screws).

23. Install the Potentiometer/Switch board assembly (see Potentiometer/Switch board assembly installation procedure).

24. Install the Processor board.

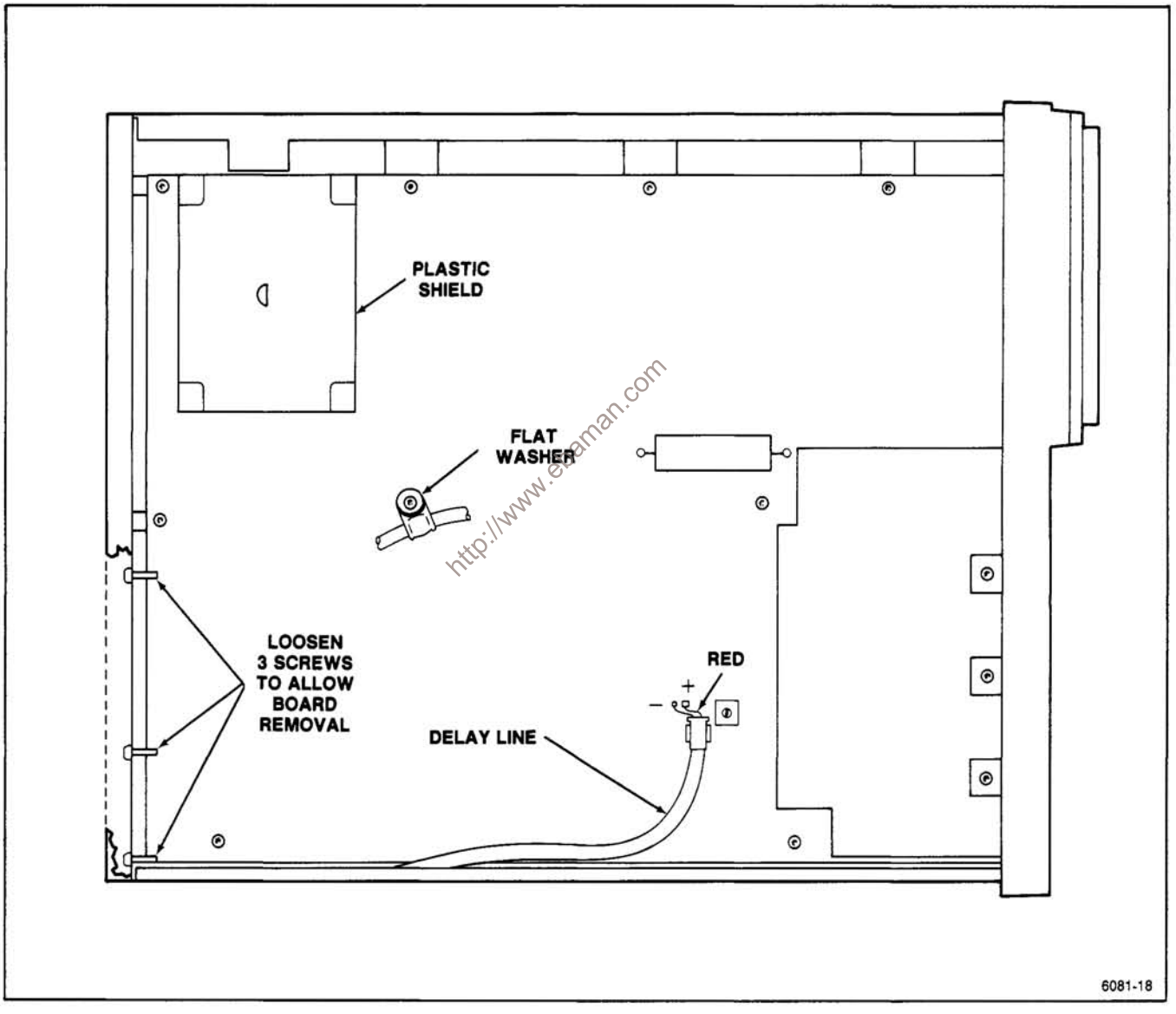

Figure 6-4. Main board removal.

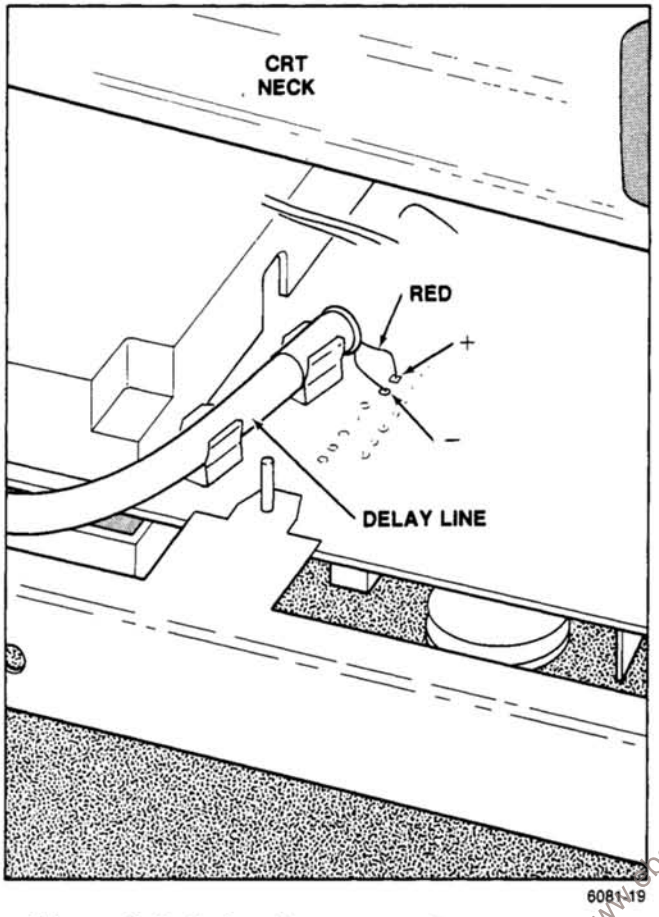

Figure 6-5. Delay-line connections to top of Main board.

25. Dress the two ribbon cables to the top of the instrument. Connect them to the Processor and Potentiometer boards.

26. Install the crt socket. Turn the socket sideways and push it through the crt-socket holder in the rear panel.

27. Install the crt (see crt installation procedure).

http://www.eboman.com

OPTIONS

INTRODUCTION

This section contains a general description of the instrument options available at the time of publication. Additional information about instrument options can be obtained either by consulting the current Tektronix Product Catalog or by contacting your local Tektronix Field Office or representative.

INTERNATIONAL POWER CORDS

Instruments are shipped with the detachable power-cord option ordered by the customer. Descriptive information about the international power-cord options is provided in Section 2 "Preparation for Use." The following list describes the power cords available for the 2245A.

Standard	North American 120 V, 60 Hz, 74 in.
Option A1	Universal Euro 220 V, 50 Hz, 2.5 m
Option A2	UK 240 V, 50 Hz, 2.5 m
Option A3	Australian 240 V, 50 Hz, 2.5 m
Option A4	North American 220 V, 50 Hz, 2.5 m
Option A5	Switzerland 220 V, 50 Hz, 2.5 m

http://www.ebaman.com

OPTION 1R
RACKMOUNTED INSTRUMENT

When the 2245A Portable Oscilloscope is ordered with Option 1R, it is shipped in a configuration that permits easy installation into a 19-inch-wide equipment rack. Also, an optional rackmounting kit may be ordered to convert the standard 2245A to a rackmounted instrument. Installation instructions for rackmounting are provided in the documentation supplied with the rackmounting kit and the 1R Option.

REPLACEABLE ELECTRICAL PARTS

PARTS ORDERING INFORMATION

Replacement parts are available from or through your local Tektronix, Inc. Field Office or representative.

Changes to Tektronix instruments are sometimes made to accommodate improved components as they become available, and to give you the benefit of the latest circuit improvements developed in our engineering department. It is therefore important, when ordering parts, to include the following information in your order: Part number, instrument type or number, serial number, and modification number if applicable.

If a part you have ordered has been replaced with a new or improved part, your local Tektronix, Inc. Field Office or representative will contact you concerning any change in part number.

Change information, if any, is located at the rear of this manual.

LIST OF ASSEMBLIES

A list of assemblies can be found at the beginning of the Electrical Parts List. The assemblies are listed in numerical order. When the complete component number of a part is known, this list will identify the assembly in which the part is located.

CROSS INDEX-MFR. CODE NUMBER TO MANUFACTURER

The Mfr. Code Number to Manufacturer index for the Electrical Parts List is located immediately after this page. The Cross Index provides codes, names and addresses of manufacturers of components listed in the Electrical Parts List.

ABBREVIATIONS

Abbreviations conform to American National Standard Y1.1.

COMPONENT NUMBER (column one of the Electrical Parts List)

A numbering method has been used to identify assemblies, subassemblies and parts. Examples of this numbering method and typical expansions are illustrated by the following:

Example a.

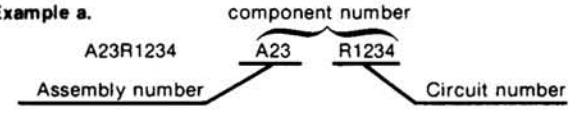

Read: Resistor 1234 of Assembly 23

Example b.

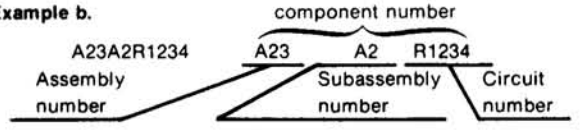

Read: Resistor 1234 of Subassembly 2 of Assembly 23

Only the circuit number will appear on the diagrams and circuit board illustrations. Each diagram and circuit board illustration is clearly marked with the assembly number. Assembly numbers are also marked on the mechanical exploded views located in the Mechanical Parts List. The component number is obtained by adding the assembly number prefix to the circuit number.

The Electrical Parts List is divided and arranged by assemblies in numerical sequence (e.g., assembly A1 with its subassemblies and parts, precedes assembly A2 with its subassemblies and parts).

Chassis-mounted parts have no assembly number prefix and are located at the end of the Electrical Parts List.

TEKTRONIX PART NO. (column two of the Electrical Parts List)

Indicates part number to be used when ordering replacement part from Tektronix.

SERIAL/MODEL NO. (columns three and four of the Electrical Parts List)

Column three (3) indicates the serial number at which the part was first used. Column four (4) indicates the serial number at which the part was removed. No serial number entered indicates part is good for all serial numbers.

NAME & DESCRIPTION (column five of the Electrical Parts List)

In the Parts List, an Item Name is separated from the description by a colon (:). Because of space limitations, an Item Name may sometimes appear as incomplete. For further Item Name identification, the U.S. Federal Cataloging Handbook H6-1 can be utilized where possible.

MFR. CODE (column six of the Electrical Parts List)

Indicates the code number of the actual manufacturer of the part. (Code to name and address cross reference can be found immediately after this page.)

MFR. PART NUMBER (column seven of the Electrical Parts List)

Indicates actual manufacturers part number.

http://www.ebaman.com

CROSS INDEX - MFR. CODE NUMBER TO MANUFACTURER

Mfr. Code	Manufacturer	Address	City, State, Zip Code
00779	AMP INC	2800 FULLING MILL PO BOX 3608	HARRISBURG PA 17105
01121	ALLEN-BRADLEY CO	1201 SOUTH 2ND ST	MILWAUKEE WI 53204-2410
01295	TEXAS INSTRUMENTS INC SEMICONDUCTOR GROUP	13500 N CENTRAL EXP PO BOX 655012	DALLAS TX 75265
02735	RCA CORP SOLID STATE DIVISION	ROUTE 202	SOMERVILLE NJ 08876
03508	GENERAL ELECTRIC CO SEMI-CONDUCTOR PRODUCTS DEPT	W GENESEE ST	AUBURN NY 13021
04099	CAPCO INC	1328 WINTERS AVE PO BOX 1028	GRAND JUNCTION CO 81502
04222	AVX CERAMICS DIV OF AVX CORP	19TH AVE SOUTH P O BOX 867	MYRTLE BEACH SC 29577
04713	MOTOROLA INC SEMICONDUCTOR PRODUCTS SECTOR	5005 E MCDOWELL RD	PHOENIX AZ 85008-4229
05245	CORCOM INC	1600 WINCHESTER RD	LIBERTYVILLE IL 60048-1267
05397	UNION CARBIDE CORP MATERIALS SYSTEMS DIV	11901 MADISON AVE	CLEVELAND OH 44101
05828	GENERAL INSTRUMENT CORP GOVERNMENT SYSTEMS DIV	600 W JOHN ST	HICKSVILLE NY 11802
06665	PRECISION MONOLITHICS INC SUB OF BOURNS INC	1500 SPACE PARK DR	SANTA CLARA CA 95050
07263	FAIRCHILD SEMICONDUCTOR CORP NORTH AMERICAN SALES SUB OF SCHLUMBERGER LTD MS 118	10400 RIDGEVIEW CT	CUPERTINO CAW CA 95014
08806	GENERAL ELECTRIC CO MINIATURE LAMP PRODUCTS DEPT	NELA PK	CLEVELAND OH 44112
09922	BURNDY CORP	RICHARDS AVE	NORWALK CT 06852
11236	CTS CORP BERNE DIV THICK FILM PRODUCTS GROUP	406 PARR ROAD	BERNE IN 46711-9506
12954	MICROSEMI CORP - SCOTTSDALE	8700 E THOMAS RD P O BOX 1390	SCOTTSDALE AZ 85252
13511	AMPHENOL CADRE DIV BUNKER RAMO CORP		LOS GATOS CA
14433	ITT SEMICONDUCTORS DIV		WEST PALM BEACH FL
14552	MICROSEMI CROP	2830 S FAIRVIEW ST	SANTA ANA CA 92704-5948
15238	ITT SEMICONDUCTORS A DIVISION OF INTERNATIONAL TELEPHONE AND TELEGRAPH CORP	500 BROADWAY P O BOX 168	LAWRENCE MA 01841-3002
15454	AMETEK INC RODAN DIV	2905 BLUE STAR ST	ANAHEIM CA 92806-2510
19613	MINNESOTA MINING AND MFG CO TEXTOOL PRODUCTS DEPT ELECTRONIC PRODUCT DIV	1410 E PIONEER DR	IRVING TX 75061-7847
19701	MEPCO/CENTRALAB A NORTH AMERICAN PHILIPS CO	P O BOX 760	MINERAL WELLS TX 76067-0760
20932	KYOCERA INTERNATIONAL INC	11620 SORRENTO VALLEY RD PO BOS 81543 PLANT NO 1	SAN DIEGO CA 92121
24546	CORNING GLASS WORKS	550 HIGH ST	BRADFORD PA 16701-3737
24931	SPECIALTY CONNECTOR CO INC	2100 EARLYWOOD DR PO BOX 547	FRANKLIN IN 46131
27014	NATIONAL SEMICONDUCTOR CORP	2900 SEMICONDUCTOR DR	SANTA CLARA CA 95051-0606
31918	ITT SCHADOW INC	8081 WALLACE RD	EDEN PRAIRIE MN 55344-2224
32997	BOURNS INC TRIMPOT DIV	1200 COLUMBIA AVE	RIVERSIDE CA 92507-2114
34649	INTEL CORP	3065 BOWERS AVE	SANTA CLARA CA 95051
50434	HEWLETT-PACKARD CO OPTOELECTRONICS DIV	370 W TRIMBLE RD	SAN JOSE CA 95131
51406	MURATA ERIE NORTH AMERICA INC GEORGIA OPERATIONS	2200 LAKE PARK DR	SMYRNA GA 30080
51642	CENTRE ENGINEERING INC	2820 E COLLEGE AVE	STATE COLLEGE PA 16801-7515
52763	STETTNER ELECTRONICS INC	6135 AIRWAYS BLVD PO BOX 21947	CHATTANOOGA TN 37421-2970
52769	SPRAGUE-GOODMAN ELECTRONICS INC	134 FULTON AVE	GARDEN CITY PARK NY 11040-5352
54473	MATSUSHITA ELECTRIC CORP OF AMERICA	ONE PANASONIC WAY PO BOX 1501	SECAUCUS NJ 07094-2917

http://www.ebaman.com

CROSS INDEX - MFR. CODE NUMBER TO MANUFACTURER

Mfr. Code	Manufacturer	Address	City, State, Zip Code
54583	TDK ELECTRONICS CORP	12 HARBOR PARK DR	PORT WASHINGTON NY 11550
54937	DE YOUNG MANUFACTURING INC	12920 NE 125TH WAY	KIRKLAND, WA 98034-7716
55112	WESTLAKE CAPACITORS INC	5334 STERLING CENTER DRIVE	WESTLAKE VILLAGE CA 91361
55680	NICHICON /AMERICA/ CORP	927 E STATE PKY	SCHAUMBURG IL 60195-4526
56289	SPRAGUE ELECTRIC CO WORLD HEADQUARTERS	92 HAYDEN AVE	LEXINGTON MA 02173-7929
57668	R-OHM CORP	16931 MILLIKEN AVE	IRVINE CA 92713
61529	AROMAT CORP	250 SHEFFIELD ST	MOUNTAINSIDE NJ 07092-2303
71400	BUSSMANN DIV OF COOPER INDUSTRIES INC	114 OLD STATE RD PO BOX 14460	ST LOUIS MO 63178
71590	MEPCO/CENTRALAB INC A NORTH AMERICAN PHILIPS CO	HWY 20 W P O BOX 858	FORT DODGE IA 50501
75042	TRW INC TRW ELECTRONIC COMPONENTS IRC FIXED RESISTORS PHILADELPHIA DIV	401 N BROAD ST	PHILADELPHIA PA 19108-1001
80009	TEKTRONIX INC	14150 SW KARL BRAUM DR PO BOX 500 MS 53-111	BEAVERTON OR 97077
91637	DALE ELECTRONICS INC	2064 12TH AVE PO BOX 609	COLUMBUS NE 68601-3632
96733	SFE TECHNOLOGIES	1501 FIRST ST	SAN FERNANDO CA 91340-2707
D5243	ROEDERSTEIN E SPEZIALFABRIK FUER KONDENSATOREN GMBN	LUDMILLASTRASSE 23-25	8300 LANDSHUT GERMANY
TK0020	UNITED CHEMI-CON INC	1128 LEXINGTON AVE	ROCHESTER NY 14606
TK0213	TOPTRON CORP	TOKYO	JAPAN
TK0273	MITEL SEMICONDUCTOR INC	18 AIRPORT BLVD	BROMONT QUE CAN J0E 1L0
TK0510	PANASONIC COMPANY DIV OF MATSUSHITA ELECTRIC CORP	ONE PANASONIC WAY	SECAUCUS NJ 07094
TK0515	WORLD PRODUCTS INC	19678 8TH ST E PO OBX 517	SONOMA CA 95476-3803
TK0961	NEC ELECTRONICS USA INC ELECTRON DIV	401 ELLIS ST PO OBX 7241	MOUNTAIN VIEW CA 94039
TK1015	MUSASHI WORKS OF HITACHI LTD	1450 JOSUIHON-CHO KODAIRA-SHI	TOKYO JAPAN
TK1016	TOSHIBA AMERICA INC ELECTRONIC COMPONENTS DIV BUSINESS SECTOR	2692 DOW AVE	TUSTIN CA 92680
TK1424	MARCON AMERICA CORP	700 LANDWEHR RD	NORTHBROOK IL 60062
TK1441	GFS MANUFACTURING INC	6 PROGRESS DR BOX 517	DOVER NH 03820
TK1450	TOKYO COSMOS ELECTRIC CO LTD	2-268 SOBUDAI ZAWA	KANAGAWA 228 JAPAN
TK1573	WILHELM WESTERMAN	PO BOX 2345 AUGUSTA-ANLAGE 56	6800 MANNHEIM 1 WEST GERMANY
TK1689	AROMAT CORP	10400 N TANTAU AVE	CUPERTINO CA 95014-0708
TK2051	MARSHALL INDUSTRIES	8333 S.W. CIRRUS DR.	BEAVERTON, OR 97005
TK2058	TDK CORPORATION OF AMERICA	2254 N. FIRST ST.	SAN JOSE, CA. 95131

http://www.ebaman.com

Component No.	Tektronix Part No.	Serial/Assembly No. Effective	Dscont	Name & Description	Mfr. Code	Mfr. Part No.
A8	670-9783-01			CIRCUIT BD ASSY:CRT CONTROL	80009	670-9783-01
A10	671-0532-01			CIRCUIT BD ASSY:MAIN	80009	671-0532-01
A12	670-9402-01			CIRCUIT BD ASSY:POTENTIOMETER	80009	670-9402-01
A14	670-9934-00			CIRCUIT BD ASSY:SWITCH	80009	670-9934-00
A16	671-0314-00			CIRCUIT BD ASSY:PROCESSOR	80009	671-0314-00
A18	670-9398-03			CIRCUIT BD ASSY:LV POWER SUPPLY,A18	80009	670-9398-03

http://www.ebaman.com

Component No.	Tektronix Part No.	Serial/Assembly No. Effective	Dscont	Name & Description	Mfr. Code	Mfr. Part No.
A8	670-9783-01			CIRCUIT BD ASSY:CRT CONTROL	80009	670-9783-01
A8P8	131-4038-00			CONN,RCPT,ELEC:HDR,1 X 8,RTANG,0.1 SPACING	00779	640453-8
A8R901	311-2344-00			RES,VAR,NONWW:CKT BD,4.7K OHM,20%,1.25W	71590	BA17140001
A8R902	311-2344-00			RES,VAR,NONWW:CKT BD,4.7K OHM,20%,1.25W	71590	BA17140001
A8R903	311-2344-00			RES,VAR,NONWW:CKT BD,4.7K OHM,20%,1.25W	71590	BA17140001
A8R905	311-2344-00			RES,VAR,NONWW:CKT BD,4.7K OHM,20%,1.25W	71590	BA17140001

http://www.ebaman.com

Component No.	Tektronix Part No.	Serial/Assembly No. Effective	Dscont	Name & Description	Mfr. Code	Mfr. Part No.
A10	671-0532-01			CIRCUIT BD ASSY:MAIN	80009	671-0532-01
A10AT117	307-2135-00			RES NTWK,FXD,FI:ATTENUATOR DIP PKG	80009	307-2135-00
A10AT127	307-2135-00			RES NTWK,FXD,FI:ATTENUATOR DIP PKG	80009	307-2135-00
A10C101	281-0909-00			CAP,FXD,CER DI:0.022UF,20%,50V	54583	MA12X7R1H223M-T
A10C102	281-0909-00			CAP,FXD,CER DI:0.022UF,20%,50V	54583	MA12X7R1H223M-T
A10C103	281-0909-00			CAP,FXD,CER DI:0.022UF,20%,50V	54583	MA12X7R1H223M-T
A10C104	281-0909-00			CAP,FXD,CER DI:0.022UF,20%,50V	54583	MA12X7R1H223M-T
A10C105	281-0909-00			CAP,FXD,CER DI:0.022UF,20%,50V	54583	MA12X7R1H223M-T
A10C106	281-0909-00			CAP,FXD,CER DI:0.022UF,20%,50V	54583	MA12X7R1H223M-T
A10C107	281-0909-00			CAP,FXD,CER DI:0.022UF,20%,50V	54583	MA12X7R1H223M-T
A10C108	281-0909-00			CAP,FXD,CER DI:0.022UF,20%,50V	54583	MA12X7R1H223M-T
A10C111	281-0909-00			CAP,FXD,CER DI:0.022UF,20%,50V	54583	MA12X7R1H223M-T
A10C112	283-0414-01			CAP,FXD,CER DI:0.022UF,20%,500V	80009	283-0414-01
A10C113	281-0909-00			CAP,FXD,CER DI:0.022UF,20%,50V	54583	MA12X7R1H223M-T
A10C114	281-0214-00			CAP,VAR,CER DI:0.6-3PF,400V	52763	313613-140
A10C121	281-0909-00			CAP,FXD,CER DI:0.022UF,20%,50V	54583	MA12X7R1H223M-T
A10C122	283-0414-01			CAP,FXD,CER DI:0.022UF,20%,500V	80009	283-0414-01
A10C123	281-0909-00			CAP,FXD,CER DI:0.022UF,20%,50V	54583	MA12X7R1H223M-T
A10C124	281-0214-00			CAP,VAR,CER DI:0.6-3PF,400V	52763	313613-140
A10C125	281-0770-00			CAP,FXD,CER DI:1000PF,20%,100V	04222	MA101C102MAA
A10C126	281-0770-00			CAP,FXD,CER DI:1000PF,20%,100V	04222	MA101C102MAA
A10C131	281-0909-00			CAP,FXD,CER DI:0.022UF,20%,50V	54583	MA12X7R1H223M-T
A10C132	281-0938-00			CAP,FXD,CER DI:20PF,2%,500V	96733	R3900
A10C133	281-0799-00			CAP,FXD,CER DI:62PF,2%,100V	04222	MA101A620GAA
A10C134	281-0306-00			CAP,VAR,CER,DI:3.3-20PF	52769	GKU 18000
A10C135	281-0909-00			CAP,FXD,CER DI:0.022UF,20%,50V	54583	MA12X7R1H223M-T
A10C136	281-0909-00			CAP,FXD,CER DI:0.022UF,20%,50V	54583	MA12X7R1H223M-T
A10C137	281-0797-00			CAP,FXD,CER DI:15PF,10%,100V	04222	SA106A150KAA
A10C138	281-0315-00			CAP,VAR,CER DI:2.8-10PF	52769	GKU 10000
A10C139	281-0797-00			CAP,FXD,CER DI:15PF,10%,100V	04222	SA106A150KAA
A10C140	290-0974-01			CAP,FXD,ELCTLT:10UF,20%,50V	TK0020	KMC50VB10RM5X11F
A10C151	281-0909-00			CAP,FXD,CER DI:0.022UF,20%,50V	54583	MA12X7R1H223M-T
A10C152	281-0938-00			CAP,FXD,CER DI:20PF,2%,500V	96733	R3900
A10C153	281-0799-00			CAP,FXD,CER DI:62PF,2%,100V	04222	MA101A620GAA
A10C154	281-0306-00			CAP,VAR,CER,DI:3.3-20PF	52769	GKU 18000
A10C155	281-0909-00			CAP,FXD,CER DI:0.022UF,20%,50V	54583	MA12X7R1H223M-T
A10C156	281-0909-00			CAP,FXD,CER DI:0.022UF,20%,50V	54583	MA12X7R1H223M-T
A10C157	281-0797-00			CAP,FXD,CER DI:15PF,10%,100V	04222	SA106A150KAA
A10C158	281-0315-00			CAP,VAR,CER DI:2.8-10PF	52769	GKU 10000
A10C159	281-0797-00			CAP,FXD,CER DI:15PF,10%,100V	04222	SA106A150KAA
A10C171	290-0974-01			CAP,FXD,ELCTLT:10UF,20%,50V	TK0020	KMC50VB10RM5X11F
A10C172	281-0909-00			CAP,FXD,CER DI:0.022UF,20%,50V	54583	MA12X7R1H223M-T
A10C173	281-0772-00			CAP,FXD,CER DI:4700PF,10%,100V	04222	MA201C472KAA
A10C180	290-0944-01			CAP,FXD,ELCTLT:220UF,20%,10V	55680	UVX1C221MPA1TA
A10C181	290-0944-01			CAP,FXD,ELCTLT:220UF,20%,10V	55680	UVX1C221MPA1TA
A10C190	281-0797-00			CAP,FXD,CER DI:15PF,10%,100V	04222	SA106A150KAA
A10C191	281-0797-00			CAP,FXD,CER DI:15PF,10%,100V	04222	SA106A150KAA
A10C201	290-0974-01			CAP,FXD,ELCTLT:10UF,20%,50V	TK0020	KMC50VB10RM5X11F
A10C202	290-0974-01			CAP,FXD,ELCTLT:10UF,20%,50V	TK0020	KMC50VB10RM5X11F
A10C203	290-0974-01			CAP,FXD,ELCTLT:10UF,20%,50V	TK0020	KMC50VB10RM5X11F
A10C204	290-0974-01			CAP,FXD,ELCTLT:10UF,20%,50V	TK0020	KMC50VB10RM5X11F
A10C205	281-0909-00			CAP,FXD,CER DI:0.022UF,20%,50V	54583	MA12X7R1H223M-T
A10C206	281-0909-00			CAP,FXD,CER DI:0.022UF,20%,50V	54583	MA12X7R1H223M-T
A10C210	281-0909-00			CAP,FXD,CER DI:0.022UF,20%,50V	54583	MA12X7R1H223M-T
A10C211	281-0759-00			CAP,FXD,CER DI:22PF,10%,100V	04222	MA101A220KAA
A10C212	281-0909-00			CAP,FXD,CER DI:0.022UF,20%,50V	54583	MA12X7R1H223M-T
A10C213	281-0909-00			CAP,FXD,CER DI:0.022UF,20%,50V	54583	MA12X7R1H223M-T
A10C214	281-0909-00			CAP,FXD,CER DI:0.022UF,20%,50V	54583	MA12X7R1H223M-T

http://www.tekscopes.com

Component No.	Tektronix Part No.	Serial/Assembly No. Effective	Dscont	Name & Description	Mfr. Code	Mfr. Part No.
A10C215	290-0974-01			CAP,FXD,ELCTLT:10UF,20%,50V	TK0020	KMC50VB10RM5X11F
A10C216	281-0909-00			CAP,FXD,CER DI:0.022UF,20%,50V	54583	MA12X7R1H223M-T
A10C217	281-0909-00			CAP,FXD,CER DI:0.022UF,20%,50V	54583	MA12X7R1H223M-T
A10C218	281-0775-01			CAP,FXD,CER DI:0.1UF,20%,50V	04222	SA105E104MAA
A10C219	281-0909-00			CAP,FXD,CER DI:0.022UF,20%,50V	54583	MA12X7R1H223M-T
A10C220	281-0909-00			CAP,FXD,CER DI:0.022UF,20%,50V	54583	MA12X7R1H223M-T
A10C221	281-0759-00			CAP,FXD,CER DI:22PF,10%,100V	04222	MA101A220KAA
A10C222	281-0909-00			CAP,FXD,CER DI:0.022UF,20%,50V	54583	MA12X7R1H223M-T
A10C223	281-0909-00			CAP,FXD,CER DI:0.022UF,20%,50V	54583	MA12X7R1H223M-T
A10C224	281-0909-00			CAP,FXD,CER DI:0.022UF,20%,50V	54583	MA12X7R1H223M-T
A10C225	290-0974-01			CAP,FXD,ELCTLT:10UF,20%,50V	TK0020	KMC50VB10RM5X11F
A10C228	281-0775-01			CAP,FXD,CER DI:0.1UF,20%,50V	04222	SA105E104MAA
A10C229	281-0909-00			CAP,FXD,CER DI:0.022UF,20%,50V	54583	MA12X7R1H223M-T
A10C232	281-0909-00			CAP,FXD,CER DI:0.022UF,20%,50V	54583	MA12X7R1H223M-T
A10C233	281-0909-00			CAP,FXD,CER DI:0.022UF,20%,50V	54583	MA12X7R1H223M-T
A10C234	281-0909-00			CAP,FXD,CER DI:0.022UF,20%,50V	54583	MA12X7R1H223M-T
A10C235	290-0974-01			CAP,FXD,ELCTLT:10UF,20%,50V	TK0020	KMC50VB10RM5X11F
A10C238	281-0775-01			CAP,FXD,CER DI:0.1UF,20%,50V	04222	SA105E104MAA
A10C239	281-0909-00			CAP,FXD,CER DI:0.022UF,20%,50V	54583	MA12X7R1H223M-T
A10C242	281-0909-00			CAP,FXD,CER DI:0.022UF,20%,50V	54583	MA12X7R1H223M-T
A10C243	281-0909-00			CAP,FXD,CER DI:0.022UF,20%,50V	54583	MA12X7R1H223M-T
A10C244	281-0909-00			CAP,FXD,CER DI:0.022UF,20%,50V	54583	MA12X7R1H223M-T
A10C245	290-0974-01			CAP,FXD,ELCTLT:10UF,20%,50V	TK0020	KMC50VB10RM5X11F
A10C248	281-0775-01			CAP,FXD,CER DI:0.1UF,20%,50V	04222	SA105E104MAA
A10C249	281-0909-00			CAP,FXD,CER DI:0.022UF,20%,50V	54583	MA12X7R1H223M-T
A10C258	290-0974-01			CAP,FXD,ELCTLT:10UF,20%,50V	TK0020	KMC50VB10RM5X11F
A10C265	281-0909-00			CAP,FXD,CER DI:0.022UF,20%,50V	54583	MA12X7R1H223M-T
A10C268	281-0770-00			CAP,FXD,CER DI:1000PF,20%,100V	04222	MA101C102MAA
A10C271	281-0798-00			CAP,FXD,CER DI:51PF,1%,100V	04222	MA101A510GAA
A10C272	281-0819-00			CAP,FXD,CER DI:33 PF,5%,50V	04222	GC105A330J
A10C273	281-0307-00			CAP,VAR,CER,DI:3-8-25PF	52769	GKU 25000
A10C274	281-0305-00			CAP,VAR,CER,DI:1.5-4.0PF	52769	GKU 4R000
A10C275	281-0872-00			CAP,FXD,CER DI:91PF,5%,100V	04222	MC101A910J
A10C282	281-0909-00			CAP,FXD,CER DI:0.022UF,20%,50V	54583	MA12X7R1H223M-T
A10C283	281-0909-00			CAP,FXD,CER DI:0.022UF,20%,50V	54583	MA12X7R1H223M-T
A10C297	281-0909-00			CAP,FXD,CER DI:0.022UF,20%,50V	54583	MA12X7R1H223M-T
A10C298	281-0909-00			CAP,FXD,CER DI:0.022UF,20%,50V	54583	MA12X7R1H223M-T
A10C301	281-0909-00			CAP,FXD,CER DI:0.022UF,20%,50V	54583	MA12X7R1H223M-T
A10C302	281-0770-00			CAP,FXD,CER DI:1000PF,20%,100V	04222	MA101C102MAA
A10C303	290-0183-00			CAP,FXD,ELCTLT:1UF,10%,35V	05397	T3228105K035AS
A10C304	281-0909-00			CAP,FXD,CER DI:0.022UF,20%,50V	54583	MA12X7R1H223M-T
A10C305	290-0183-00			CAP,FXD,ELCTLT:1UF,10%,35V	05397	T3228105K035AS
A10C306	290-0183-00			CAP,FXD,ELCTLT:1UF,10%,35V	05397	T3228105K035AS
A10C307	295-0198-00			CAP SET,MATCHED:(1),10.0UF,1.5%,25V/(1)0.1UF,1.5%,35V/(1)0.0099UF,1.5%,50V (LOCATIONS A,B,C)	80009	295-0198-00
A10C308	281-0909-00			CAP,FXD,CER DI:0.022UF,20%,50V	54583	MA12X7R1H223M-T
A10C309	281-0909-00			CAP,FXD,CER DI:0.022UF,20%,50V	54583	MA12X7R1H223M-T
A10C310	281-0909-00			CAP,FXD,CER DI:0.022UF,20%,50V	54583	MA12X7R1H223M-T
A10C311	281-0798-00			CAP,FXD,CER DI:51PF,1%,100V	04222	MA101A510GAA
A10C312	281-0909-00			CAP,FXD,CER DI:0.022UF,20%,50V	54583	MA12X7R1H223M-T
A10C313	281-0909-00			CAP,FXD,CER DI:0.022UF,20%,50V	54583	MA12X7R1H223M-T
A10C314	281-0307-00			CAP,VAR,CER,DI:3-8-25PF	52769	GKU 25000
A10C315	281-0798-00			CAP,FXD,CER DI:51PF,1%,100V	04222	MA101A510GAA
A10C316	281-0909-00			CAP,FXD,CER DI:0.022UF,20%,50V	54583	MA12X7R1H223M-T
A10C317	281-0909-00			CAP,FXD,CER DI:0.022UF,20%,50V	54583	MA12X7R1H223M-T
A10C318	281-0909-00			CAP,FXD,CER DI:0.022UF,20%,50V	54583	MA12X7R1H223M-T
A10C319	281-0909-00			CAP,FXD,CER DI:0.022UF,20%,50V	54583	MA12X7R1H223M-T

http://www.manuals.com

Component No.	Tektronix Part No.	Serial/Assembly No. Effective	Dscont	Name & Description	Mfr. Code	Mfr. Part No.
A10C320	281-0909-00			CAP,FXD,CER DI:0.022UF,20%,50V	54583	MA12X7R1H223M-T
A10C321	281-0798-00			CAP,FXD,CER DI:51PF,1%,100V	04222	MA101A510GAA
A10C326	281-0909-00			CAP,FXD,CER DI:0.022UF,20%,50V	54583	MA12X7R1H223M-T
A10C329	281-0307-00			CAP,VAR,CER,DI:3-8-25PF	52769	GKU 25000
A10C330	281-0799-00			CAP,FXD,CER DI:62PF,2%,100V	04222	MA101A620GAA
A10C337	281-0909-00			CAP,FXD,CER DI:0.022UF,20%,50V	54583	MA12X7R1H223M-T
A10C338	281-0909-00			CAP,FXD,CER DI:0.022UF,20%,50V	54583	MA12X7R1H223M-T
A10C339	281-0909-00			CAP,FXD,CER DI:0.022UF,20%,50V	54583	MA12X7R1H223M-T
A10C351	281-0909-00			CAP,FXD,CER DI:0.022UF,20%,50V	54583	MA12X7R1H223M-T
A10C421	281-0773-00			CAP,FXD,CER DI:0.01UF,10%,100V	04222	MA201C103KAA
A10C422	281-0861-00			CAP,FXD,CER DI:270PF,5%,50V	54583	MA12C0G1H271J
A10C423	281-0864-00			CAP,FXD,CER DI:430PF,5%,100V	54583	MA12C0G2A431J
A10C424	290-0183-00			CAP,FXD,ELCTLT:1UF,10%,35V	05397	T3228105K035AS
A10C425	281-0820-00			CAP,FXD,CER DI:680 PF,10%,50V	04222	MA105C651KAA
A10C426	281-0864-00			CAP,FXD,CER DI:430PF,5%,100V	54583	MA12C0G2A431J
A10C432	281-0767-00			CAP,FXD,CER DI:330PF,20%,100V	04222	MA106C331MAA
A10C444	281-0765-00			CAP,FXD,CER DI:100PF,5%,100V	04222	MA101A101JAA
A10C445	290-0183-00			CAP,FXD,ELCTLT:1UF,10%,35V	05397	T3228105K035AS
A10C447	281-0770-00			CAP,FXD,CER DI:1000PF,20%,100V	04222	MA101C102MAA
A10C451	281-0773-00			CAP,FXD,CER DI:0.01UF,10%,100V	04222	MA201C103KAA
A10C452	281-0861-00			CAP,FXD,CER DI:270PF,5%,50V	54583	MA12C0G1H271J
A10C453	281-0864-00			CAP,FXD,CER DI:430PF,5%,100V	54583	MA12C0G2A431J
A10C454	290-0183-00			CAP,FXD,ELCTLT:1UF,10%,35V	05397	T3228105K035AS
A10C455	281-0820-00			CAP,FXD,CER DI:680 PF,10%,50V	04222	MA105C651KAA
A10C462	281-0864-00			CAP,FXD,CER DI:430PF,5%,100V	54583	MA12C0G2A431J
A10C463	281-0813-00			CAP,FXD,CER DI:0.047UF,20%,50V	05397	C412C473M5V2CA
A10C474	281-0776-00			CAP,FXD,CER DI:120PF,5%,100V	20932	401E0100AD121J
A10C475	290-0183-00			CAP,FXD,ELCTLT:1UF,10%,35V	05397	T3228105K035AS
A10C477	281-0770-00			CAP,FXD,CER DI:1000PF,20%,100V	04222	MA101C102MAA
A10C481	281-0909-00			CAP,FXD,CER DI:0.022UF,20%,50V	54583	MA12X7R1H223M-T
A10C482	281-0909-00			CAP,FXD,CER DI:0.022UF,20%,50V	54583	MA12X7R1H223M-T
A10C483	281-0820-00			CAP,FXD,CER DI:680 PF,10%,50V	04222	MA105C651KAA
A10C484	281-0765-00			CAP,FXD,CER DI:100PF,5%,100V	04222	MA101A101JAA
A10C485	281-0765-00			CAP,FXD,CER DI:100PF,5%,100V	04222	MA101A101JAA
A10C486	281-0765-00			CAP,FXD,CER DI:100PF,5%,100V	04222	MA101A101JAA
A10C487	281-0765-00			CAP,FXD,CER DI:100PF,5%,100V	04222	MA101A101JAA
A10C488	281-0765-00			CAP,FXD,CER DI:100PF,5%,100V	04222	MA101A101JAA
A10C489	281-0765-00			CAP,FXD,CER DI:100PF,5%,100V	04222	MA101A101JAA
A10C491	281-0819-00			CAP,FXD,CER DI:33 PF,5%,50V	04222	GC105A330J
A10C492	281-0819-00			CAP,FXD,CER DI:33 PF,5%,50V	04222	GC105A330J
A10C493	281-0819-00			CAP,FXD,CER DI:33 PF,5%,50V	04222	GC105A330J
A10C494	281-0819-00			CAP,FXD,CER DI:33 PF,5%,50V	04222	GC105A330J
A10C501	281-0909-00			CAP,FXD,CER DI:0.022UF,20%,50V	54583	MA12X7R1H223M-T
A10C502	281-0909-00			CAP,FXD,CER DI:0.022UF,20%,50V	54583	MA12X7R1H223M-T
A10C503	281-0909-00			CAP,FXD,CER DI:0.022UF,20%,50V	54583	MA12X7R1H223M-T
A10C505	281-0909-00			CAP,FXD,CER DI:0.022UF,20%,50V	54583	MA12X7R1H223M-T
A10C600	281-0861-00			CAP,FXD,CER DI:270PF,5%,50V	54583	MA12C0G1H271J
A10C601	281-0861-00			CAP,FXD,CER DI:270PF,5%,50V	54583	MA12C0G1H271J
A10C602	281-0819-00			CAP,FXD,CER DI:33 PF,5%,50V	04222	GC105A330J
A10C603	281-0819-00			CAP,FXD,CER DI:33 PF,5%,50V	04222	GC105A330J
A10C604	281-0909-00			CAP,FXD,CER DI:0.022UF,20%,50V	54583	MA12X7R1H223M-T
A10C605	281-0909-00			CAP,FXD,CER DI:0.022UF,20%,50V	54583	MA12X7R1H223M-T
A10C606	281-0909-00			CAP,FXD,CER DI:0.022UF,20%,50V	54583	MA12X7R1H223M-T
A10C607	281-0765-00			CAP,FXD,CER DI:100PF,5%,100V	04222	MA101A101JAA
A10C608	281-0765-00			CAP,FXD,CER DI:100PF,5%,100V	04222	MA101A101JAA
A10C609	281-0909-00			CAP,FXD,CER DI:0.022UF,20%,50V	54583	MA12X7R1H223M-T
A10C610	281-0909-00			CAP,FXD,CER DI:0.022UF,20%,50V	54583	MA12X7R1H223M-T
A10C611	281-0810-00			CAP,FXD,CER DI:5.6PF,+/-0.5PF,100V	04222	MA101A5R6DAA

http://www.tekscope.com

Component No.	Tektronix Part No.	Serial/Assembly No. Effective	Dscont	Name & Description	Mfr. Code	Mfr. Part No.
A10C612	281-0810-00			CAP,FXD,CER DI:5.6PF,+/-0.5PF,100V	04222	MA101A5R6DAA
A10C613	281-0909-00			CAP,FXD,CER DI:0.022UF,20%,50V	54583	MA12X7R1H223M-T
A10C701	281-0909-00			CAP,FXD,CER DI:0.022UF,20%,50V	54583	MA12X7R1H223M-T
A10C702	281-0909-00			CAP,FXD,CER DI:0.022UF,20%,50V	54583	MA12X7R1H223M-T
A10C703	281-0909-00			CAP,FXD,CER DI:0.022UF,20%,50V	54583	MA12X7R1H223M-T
A10C704	281-0909-00			CAP,FXD,CER DI:0.022UF,20%,50V	54583	MA12X7R1H223M-T
A10C705	283-0057-00			CAP,FXD,CER DI:0.1UF,+80-20%,200V	04222	SR306E104ZAA
A10C706	281-0893-00			CAP,FXD,CER DI:4.7PF,+/-0.5PF,100V	04222	MA101A4R7DAA
A10C707	281-0798-00			CAP,FXD,CER DI:51PF,1%,100V	04222	MA101A510GAA
A10C708	281-0909-00			CAP,FXD,CER DI:0.022UF,20%,50V	54583	MA12X7R1H223M-T
A10C711	283-0201-01			CAP,FXD,CER DI:27PF,10%,50V	51642	ADVISE
A10C712	283-0201-01			CAP,FXD,CER DI:27PF,10%,50V	51642	ADVISE
A10C801	283-0057-00			CAP,FXD,CER DI:0.1UF,+80-20%,200V	04222	SR306E104ZAA
A10C802	283-0057-00			CAP,FXD,CER DI:0.1UF,+80-20%,200V	04222	SR306E104ZAA
A10C803	281-0707-00			CAP,FXD,CER DI:15000PF,20%,200V	20932	402EM200AD153K
A10C804	281-0909-00			CAP,FXD,CER DI:0.022UF,20%,50V	54583	MA12X7R1H223M-T
A10C805	281-0909-00			CAP,FXD,CER DI:0.022UF,20%,50V	54583	MA12X7R1H223M-T
A10C806	281-0909-00			CAP,FXD,CER DI:0.022UF,20%,50V	54583	MA12X7R1H223M-T
A10C807	281-0064-00			CAP,VAR,PLASTIC:0.25-1.5PF,600V	52769	ER-530-013
A10C808	281-0765-00			CAP,FXD,CER DI:100PF,5%,100V	04222	MA101A101JAA
A10C809	283-0057-00			CAP,FXD,CER DI:0.1UF,+80-20%,200V	04222	SR306E104ZAA
A10C810	281-0707-00			CAP,FXD,CER DI:15000PF,20%,200V	20932	402EM200AD153K
A10C811	281-0909-00			CAP,FXD,CER DI:0.022UF,20%,50V	54583	MA12X7R1H223M-T
A10C814	281-0064-00			CAP,VAR,PLASTIC:0.25-1.5PF,600V	52769	ER-530-013
A10C815	281-0909-00			CAP,FXD,CER DI:0.022UF,20%,50V	54583	MA12X7R1H223M-T
A10C816	281-0909-00			CAP,FXD,CER DI:0.022UF,20%,50V	54583	MA12X7R1H223M-T
A10C817	290-1198-00			CAP,FXD,ELCTLT:100UF,20%,10VAC	80009	290-1198-00
A10C818	283-0057-00			CAP,FXD,CER DI:0.1UF,+80-20%,200V	04222	SR306E104ZAA
A10C819	281-0765-00			CAP,FXD,CER DI:100PF,5%,100V	04222	MA101A101JAA
A10C901	281-0909-00			CAP,FXD,CER DI:0.022UF,20%,50V	54583	MA12X7R1H223M-T
A10C902	281-0909-00			CAP,FXD,CER DI:0.022UF,20%,50V	54583	MA12X7R1H223M-T
A10C903	290-0974-01			CAP,FXD,ELCTLT:10UF,20%,50V	TK0020	KMC50VB10RM5X11F
A10C904	290-0974-01			CAP,FXD,ELCTLT:10UF,20%,50V	TK0020	KMC50VB10RM5X11F
A10C910	281-0909-00			CAP,FXD,CER DI:0.022UF,20%,50V	54583	MA12X7R1H223M-T
A10C935	285-1339-00			CAP,FXD,MTLZD:0.022UF,10%,63V	55112	185/0.022/K63AAA
A10C1001	290-0974-01			CAP,FXD,ELCTLT:10UF,20%,50V	TK0020	KMC50VB10RM5X11F
A10C1002	290-0974-01			CAP,FXD,ELCTLT:10UF,20%,50V	TK0020	KMC50VB10RM5X11F
A10C1003	290-0974-01			CAP,FXD,ELCTLT:10UF,20%,50V	TK0020	KMC50VB10RM5X11F
A10C1004	281-0909-00			CAP,FXD,CER DI:0.022UF,20%,50V	54583	MA12X7R1H223M-T
A10C1005	281-0909-00			CAP,FXD,CER DI:0.022UF,20%,50V	54583	MA12X7R1H223M-T
A10C1006	281-0909-00			CAP,FXD,CER DI:0.022UF,20%,50V	54583	MA12X7R1H223M-T
A10C1101	281-0909-00			CAP,FXD,CER DI:0.022UF,20%,50V	54583	MA12X7R1H223M-T
A10C1102	290-0183-00			CAP,FXD,ELCTLT:1UF,10%,35V	05397	T3228105K035AS
A10C1103	290-0183-00			CAP,FXD,ELCTLT:1UF,10%,35V	05397	T3228105K035AS
A10C1105	290-0974-01			CAP,FXD,ELCTLT:10UF,20%,50V	TK0020	KMC50VB10RM5X11F
A10C1106	281-0820-00			CAP,FXD,CER DI:680 PF,10%,50V	04222	MA105C651KAA
A10C1107	281-0765-00			CAP,FXD,CER DI:100PF,5%,100V	04222	MA101A101JAA
A10C1110	281-0799-00			CAP,FXD,CER DI:62PF,2%,100V	04222	MA101A620GAA
A10C1111	281-0799-00			CAP,FXD,CER DI:62PF,2%,100V	04222	MA101A620GAA
A10C1114	290-0974-01			CAP,FXD,ELCTLT:10UF,20%,50V	TK0020	KMC50VB10RM5X11F
A10C1130	281-0909-00			CAP,FXD,CER DI:0.022UF,20%,50V	54583	MA12X7R1H223M-T
A10C1154	281-0909-00			CAP,FXD,CER DI:0.022UF,20%,50V	54583	MA12X7R1H223M-T
A10C1155	281-0909-00			CAP,FXD,CER DI:0.022UF,20%,50V	54583	MA12X7R1H223M-T
A10C1158	281-0909-00			CAP,FXD,CER DI:0.022UF,20%,50V	54583	MA12X7R1H223M-T
A10C1159	281-0909-00			CAP,FXD,CER DI:0.022UF,20%,50V	54583	MA12X7R1H223M-T
A10C2701	281-0909-00			CAP,FXD,CER DI:0.022UF,20%,50V	54583	MA12X7R1H223M-T
A10C2702	281-0909-00			CAP,FXD,CER DI:0.022UF,20%,50V	54583	MA12X7R1H223M-T
A10C2703	281-0909-00			CAP,FXD,CER DI:0.022UF,20%,50V	54583	MA12X7R1H223M-T

http://www.manuals.com

Component No.	Tektronix Part No.	Serial/Assembly No. Effective	Dscont	Name & Description	Mfr. Code	Mfr. Part No.
A10C2704	281-0064-00			CAP,VAR,PLASTIC:0.25-1.5PF,600V	52769	ER-530-013
A10C2705	281-0771-00			CAP,FXD,CER DI:2200PF,20%,200V	04222	SA106E222MAA
A10C2706	281-0893-00			CAP,FXD,CER DI:4.7PF,+/-0.5PF,100V	04222	MA101A4R7DAA
A10C2707	281-0893-00			CAP,FXD,CER DI:4.7PF,+/-0.5PF,100V	04222	MA101A4R7DAA
A10C2708	283-0057-00			CAP,FXD,CER DI:0.1UF,+80-20%,200V	04222	SR306E104ZAA
A10C2709	283-0057-00			CAP,FXD,CER DI:0.1UF,+80-20%,200V	04222	SR306E104ZAA
A10C2710	283-0057-00			CAP,FXD,CER DI:0.1UF,+80-20%,200V	04222	SR306E104ZAA
A10C2711	285-1184-01			CAP,FXD,MTLZD:0.01UF,20%,4KV	56289	430P103X040
A10C2712	285-1040-00			CAP,FXD,PLASTIC:1200PF,10%,4000V	04099	TEK-17A
A10C2713	281-0771-00			CAP,FXD,CER DI:2200PF,20%,200V	04222	SA106E222MAA
A10C2715	281-0909-00			CAP,FXD,CER DI:0.022UF,20%,50V	54583	MA12X7R1H223M-T
A10C2716	281-0771-00			CAP,FXD,CER DI:2200PF,20%,200V	04222	SA106E222MAA
A10C2717	283-0057-00			CAP,FXD,CER DI:0.1UF,+80-20%,200V	04222	SR306E104ZAA
A10C2719	285-1184-01			CAP,FXD,MTLZD:0.01UF,20%,4KV	56289	430P103X040
A10C2720	285-1040-00			CAP,FXD,PLASTIC:1200PF,10%,4000V	04099	TEK-17A
A10C2721	281-0771-00			CAP,FXD,CER DI:2200PF,20%,200V	04222	SA106E222MAA
A10C2723	281-0909-00			CAP,FXD,CER DI:0.022UF,20%,50V	54583	MA12X7R1H223M-T
A10C2724	285-1184-01			CAP,FXD,MTLZD:0.01UF,20%,4KV	56289	430P103X040
A10C2758	285-1184-01			CAP,FXD,MTLZD:0.01UF,20%,4KV	56289	430P103X040
A10C2759	281-0759-00			CAP,FXD,CER DI:22PF,10%,100V	04222	MA101A220KAA
A10C2783	283-0057-00			CAP,FXD,CER DI:0.1UF,+80-20%,200V	04222	SR306E104ZAA
A10C2784	281-0909-00			CAP,FXD,CER DI:0.022UF,20%,50V	54583	MA12X7R1H223M-T
A10C2785	283-0057-00			CAP,FXD,CER DI:0.1UF,+80-20%,200V	04222	SR306E104ZAA
A10CR131	152-0246-00			SEMICOND DVC,DI:SW,SI,40V,200MA,DO-7	14433	WG1537TK
A10CR151	152-0246-00			SEMICOND DVC,DI:SW,SI,40V,200MA,DO-7	14433	WG1537TK
A10CR171	152-0141-02			SEMICOND DVC,DI:SW,SI,30V,150MA,30V,DO-35	03508	DA2527 (1N4152)
A10CR201	152-0141-02			SEMICOND DVC,DI:SW,SI,30V,150MA,30V,DO-35	03508	DA2527 (1N4152)
A10CR202	152-0141-02			SEMICOND DVC,DI:SW,SI,30V,150MA,30V,DO-35	03508	DA2527 (1N4152)
A10CR260	152-0066-00			SEMICOND DVC,DI:RECT,SI,400V,1A,DO-41	05828	GP10G-020
A10CR261	152-0066-00			SEMICOND DVC,DI:RECT,SI,400V,1A,DO-41	05828	GP10G-020
A10CR301	152-0141-02			SEMICOND DVC,DI:SW,SI,30V,150MA,30V,DO-35	03508	DA2527 (1N4152)
A10CR432	152-0246-00			SEMICOND DVC,DI:SW,SI,40V,200MA,DO-7	14433	WG1537TK
A10CR462	152-0246-00			SEMICOND DVC,DI:SW,SI,40V,200MA,DO-7	14433	WG1537TK
A10CR603	152-0141-02			SEMICOND DVC,DI:SW,SI,30V,150MA,30V,DO-35	03508	DA2527 (1N4152)
A10CR801	152-0141-02			SEMICOND DVC,DI:SW,SI,30V,150MA,30V,DO-35	03508	DA2527 (1N4152)
A10CR802	152-0061-00			SEMICOND DVC,DI:SW,SI,175V,0.1A,DO-35	07263	FDH2161
A10CR819	152-0061-00			SEMICOND DVC,DI:SW,SI,175V,0.1A,DO-35	07263	FDH2161
A10CR935	152-0141-02			SEMICOND DVC,DI:SW,SI,30V,150MA,30V,DO-35	03508	DA2527 (1N4152)
A10CR936	152-0141-02			SEMICOND DVC,DI:SW,SI,30V,150MA,30V,DO-35	03508	DA2527 (1N4152)
A10CR1001	152-0141-02			SEMICOND DVC,DI:SW,SI,30V,150MA,30V,DO-35	03508	DA2527 (1N4152)
A10CR1002	152-0141-02			SEMICOND DVC,DI:SW,SI,30V,150MA,30V,DO-35	03508	DA2527 (1N4152)
A10CR1003	152-0141-02			SEMICOND DVC,DI:SW,SI,30V,150MA,30V,DO-35	03508	DA2527 (1N4152)
A10CR1004	152-0141-02			SEMICOND DVC,DI:SW,SI,30V,150MA,30V,DO-35	03508	DA2527 (1N4152)
A10CR1005	152-0141-02			SEMICOND DVC,DI:SW,SI,30V,150MA,30V,DO-35	03508	DA2527 (1N4152)
A10CR2701	152-0400-00			SEMICOND DVC,DI:RECT,SI,400V,1A	04713	SR1977K
A10CR2702	152-0400-00			SEMICOND DVC,DI:RECT,SI,400V,1A	04713	SR1977K
A10CR2703	152-0400-00			SEMICOND DVC,DI:RECT,SI,400V,1A	04713	SR1977K
A10CR2704	152-0400-00			SEMICOND DVC,DI:RECT,SI,400V,1A	04713	SR1977K
A10CR2705	152-0141-02			SEMICOND DVC,DI:SW,SI,30V,150MA,30V,DO-35	03508	DA2527 (1N4152)
A10CR2707	152-0141-02			SEMICOND DVC,DI:SW,SI,30V,150MA,30V,DO-35	03508	DA2527 (1N4152)
A10CR2713	152-0141-02			SEMICOND DVC,DI:SW,SI,30V,150MA,30V,DO-35	03508	DA2527 (1N4152)
A10CR2714	152-0400-00			SEMICOND DVC,DI:RECT,SI,400V,1A	04713	SR1977K
A10CR2715	152-0400-00			SEMICOND DVC,DI:RECT,SI,400V,1A	04713	SR1977K
A10CR2716	152-0400-00			SEMICOND DVC,DI:RECT,SI,400V,1A	04713	SR1977K
A10CR2717	152-0400-00			SEMICOND DVC,DI:RECT,SI,400V,1A	04713	SR1977K
A10CR2718	152-0400-00			SEMICOND DVC,DI:RECT,SI,400V,1A	04713	SR1977K
A10DL22	119-2119-01			DELAY LINE,ELEC:	80009	119-2119-01
A10DS901	150-0146-00			LAMP,INCAND:14V,80MA,73E,WEDGE BASE	08806	73E

http://www.manuals.com

Component No.	Tektronix Part No.	Serial/Assembly No. Effective	Dscont	Name & Description	Mfr. Code	Mfr. Part No.
A10DS902	150-0146-00			LAMP,INCAND:14V,80MA,73E,WEDGE BASE	08806	73E
A10DS903	150-0146-00			LAMP,INCAND:14V,80MA,73E,WEDGE BASE	08806	73E
A10DS2701	150-0035-00			LAMP,GLOW:90V MAX,0.3MA,AID-T,WIRE LD	TK0213	JH005/3011JA
A10DS2702	150-0035-00			LAMP,GLOW:90V MAX,0.3MA,AID-T,WIRE LD	TK0213	JH005/3011JA
A10DS2703	150-0035-00			LAMP,GLOW:90V MAX,0.3MA,AID-T,WIRE LD	TK0213	JH005/3011JA
A10DS2704	150-0035-00			LAMP,GLOW:90V MAX,0.3MA,AID-T,WIRE LD	TK0213	JH005/3011JA
A10J11	131-3731-00			CONN,RCPT,ELEC:BNC,MALE	24931	28JR377-1
A10J12	131-3731-00			CONN,RCPT,ELEC:BNC,MALE	24931	28JR377-1
A10J13	131-3731-00			CONN,RCPT,ELEC:BNC,MALE	24931	28JR377-1
A10J14	131-3731-00			CONN,RCPT,ELEC:BNC,MALE	24931	28JR377-1
A10J15	131-3464-00			CONTACT,ELEC:BRASS	80009	131-3464-00
A10J927	131-3486-00			CONN,RCPT,ELEC:HEADER,RTANG,2 POS,0.1 SP	00779	640452-2
A10J1204	131-3638-00			CONN,RCPT,ELEC:HEADER,13 CIRCUIT,0.156 SP	80009	131-3638-00
A10K100	148-0174-00			RELAY,ARMATURE:1 FORM C,12VDC	TK1689	DS1EM-DC 12V
A10K101	148-0174-00			RELAY,ARMATURE:1 FORM C,12VDC	TK1689	DS1EM-DC 12V
A10K102	148-0173-01			RELAY,ARMATURE:12VDC	TK1689	RK1EDC12V
A10K103	148-0173-01			RELAY,ARMATURE:12VDC	TK1689	RK1EDC12V
A10K104	148-0174-00			RELAY,ARMATURE:1 FORM C,12VDC	TK1689	DS1EM-DC 12V
A10K105	148-0174-00			RELAY,ARMATURE:1 FORM C,12VDC	TK1689	DS1EM-DC 12V
A10K107	148-0174-00			RELAY,ARMATURE:1 FORM C,12VDC	TK1689	DS1EM-DC 12V
A10K108	148-0174-00			RELAY,ARMATURE:1 FORM C,12VDC	TK1689	DS1EM-DC 12V
A10K109	148-0173-01			RELAY,ARMATURE:12VDC	TK1689	RK1EDC12V
A10K110	148-0173-01			RELAY,ARMATURE:12VDC	TK1689	RK1EDC12V
A10K111	148-0174-00			RELAY,ARMATURE:1 FORM C,12VDC	TK1689	DS1EM-DC 12V
A10K112	148-0174-00			RELAY,ARMATURE:1 FORM C,12VDC	TK1689	DS1EM-DC 12V
A10L101	108-1319-00			INDUCTOR,FIXED:33UH,10%,1.8A	54583	TSL1110-330K 1R8
A10L102	108-1319-00			INDUCTOR,FIXED:33UH,10%,1.8A	54583	TSL1110-330K 1R8
A10L130	108-0682-00			COIL,RF:FIXED,61NH	80009	108-0682-00
A10L140	108-0682-00			COIL,RF:FIXED,61NH	80009	108-0682-00
A10L201	108-1319-00			INDUCTOR,FIXED:33UH,10%,1.8A	54583	TSL1110-330K 1R8
A10L216	108-1339-00			COIL,RF:FXD,330NH	80009	108-1339-00
A10L217	108-1339-00			COIL,RF:FXD,330NH	80009	108-1339-00
A10L426	108-1281-00			COIL,RF:FXD,2.2UH,10%	54583	SP0305-2R2K
A10L432	108-1341-00			COIL,RF:FXD,180NH,10%,0.1 OHM,1100MA	80009	108-1341-00
A10L445	108-1339-00			COIL,RF:FXD,330NH	80009	108-1339-00
A10L446	108-1339-00			COIL,RF:FXD,330NH	80009	108-1339-00
A10L462	108-1341-00			COIL,RF:FXD,180NH,10%,0.1 OHM,1100MA	80009	108-1341-00
A10L475	108-1339-00			COIL,RF:FXD,330NH	80009	108-1339-00
A10L476	108-1339-00			COIL,RF:FXD,330NH	80009	108-1339-00
A10L701	108-1339-00			COIL,RF:FXD,330NH	80009	108-1339-00
A10L702	108-1339-00			COIL,RF:FXD,330NH	80009	108-1339-00
A10L703	120-1688-00			TRANSFORMER,RF:TAPPED INDUCTOR	TK1441	86-504-1
A10L704	120-1688-00			TRANSFORMER,RF:TAPPED INDUCTOR	TK1441	86-504-1
A10Q131	151-1042-00			SEMICOND DVC SE:FET,SI,TO-92 (LOCATION A AND B)	04713	SPF627M2
A10Q151	151-1042-00			SEMICOND DVC SE:FET,SI,TO-92 (LOCATION A AND B)	04713	SPF627M2
A10Q171	151-0164-00			TRANSISTOR:PNP,SI,TO-92	04713	2N2907A
A10Q250	151-0712-00			TRANSISTOR:PNP,SI,TO-92	04713	SPS8223
A10Q251	151-0712-00			TRANSISTOR:PNP,SI,TO-92	04713	SPS8223
A10Q252	151-0271-05			TRANSISTOR:PNP,SI,30MA,2GHZ,TO-92	80009	151-0271-05
A10Q253	151-0271-05			TRANSISTOR:PNP,SI,30MA,2GHZ,TO-92	80009	151-0271-05
A10Q284	151-0192-05			TRANSISTOR:NPN,SI,TO=92	04713	ORDER BY DESCR
A10Q285	151-0192-05			TRANSISTOR:NPN,SI,TO=92	04713	ORDER BY DESCR
A10Q301	151-0254-03			TRANSISTOR:DARLINGTON,NPN,SI	TK1016	MPSA14, TPE2
A10Q302	151-0188-00			TRANSISTOR:PNP,SI,TO-92	80009	151-0188-00
A10Q303	151-0188-00			TRANSISTOR:PNP,SI,TO-92	80009	151-0188-00
A10Q304	151-0830-00			TRANSISTOR:NPN,SI,AMPLIFIER,625,TO-92	80009	151-0830-00

http://www.manuals.com

Component No.	Tektronix Part No.	Serial/Assembly No. Effective	Dscont	Name & Description	Mfr. Code	Mfr. Part No.
A10Q305	151-0830-00			TRANSISTOR:NPN,SI,AMPLIFIER,625,TO-92	80009	151-0830-00
A10Q306	151-0830-00			TRANSISTOR:NPN,SI,AMPLIFIER,625,TO-92	80009	151-0830-00
A10Q307	151-0829-00			TRANSISTOR:PNP,SI,TO-92	80009	151-0829-00
A10Q308	151-0830-00			TRANSISTOR:NPN,SI,AMPLIFIER,625,TO-92	80009	151-0830-00
A10Q309	151-0830-00			TRANSISTOR:NPN,SI,AMPLIFIER,625,TO-92	80009	151-0830-00
A10Q310	151-1042-00			SEMICOND DVC SE:FET,SI,TO-92 (LOCATIONS A AND B)	04713	SPF627M2
A10Q311	151-0188-00			TRANSISTOR:PNP,SI,TO-92	80009	151-0188-00
A10Q312	151-0188-00			TRANSISTOR:PNP,SI,TO-92	80009	151-0188-00
A10Q313	151-0736-00			TRANSISTOR:NPN,SI,TO-92	80009	151-0736-00
A10Q315	151-0188-00			TRANSISTOR:PNP,SI,TO-92	80009	151-0188-00
A10Q316	151-0188-00			TRANSISTOR:PNP,SI,TO-92	80009	151-0188-00
A10Q317	151-0830-00			TRANSISTOR:NPN,SI,AMPLIFIER,625,TO-92	80009	151-0830-00
A10Q318	151-0830-00			TRANSISTOR:NPN,SI,AMPLIFIER,625,TO-92	80009	151-0830-00
A10Q320	151-0829-00			TRANSISTOR:PNP,SI,TO-92	80009	151-0829-00
A10Q321	151-0830-00			TRANSISTOR:NPN,SI,AMPLIFIER,625,TO-92	80009	151-0830-00
A10Q322	151-0830-00			TRANSISTOR:NPN,SI,AMPLIFIER,625,TO-92	80009	151-0830-00
A10Q323	151-1042-00			SEMICOND DVC SE:FET,SI,TO-92 (LOCATIONS A AND B)	04713	SPF627M2
A10Q325	151-0188-00			TRANSISTOR:PNP,SI,TO-92	80009	151-0188-00
A10Q326	151-0736-00			TRANSISTOR:NPN,SI,TO-92	80009	151-0736-00
A10Q328	151-0829-00			TRANSISTOR:PNP,SI,TO-92	80009	151-0829-00
A10Q329	151-0829-00			TRANSISTOR:PNP,SI,TO-92	80009	151-0829-00
A10Q330	151-0829-00			TRANSISTOR:PNP,SI,TO-92	80009	151-0829-00
A10Q331	151-0829-00			TRANSISTOR:PNP,SI,TO-92	80009	151-0829-00
A10Q332	151-0736-00			TRANSISTOR:NPN,SI,TO-92	80009	151-0736-00
A10Q333	151-0736-00			TRANSISTOR:NPN,SI,TO-92	80009	151-0736-00
A10Q440	151-0188-00			TRANSISTOR:PNP,SI,TO-92	80009	151-0188-00
A10Q444	151-0190-00			TRANSISTOR:NPN,SI,TO-92	80009	151-0190-00
A10Q470	151-0188-00			TRANSISTOR:PNP,SI,TO-92	80009	151-0188-00
A10Q474	151-0190-00			TRANSISTOR:NPN,SI,TO-92	80009	151-0190-00
A10Q480	151-0188-00			TRANSISTOR:PNP,SI,TO-92	80009	151-0188-00
A10Q600	151-0188-00			TRANSISTOR:PNP,SI,TO-92	80009	151-0188-00
A10Q601	151-0424-00			TRANSISTOR:NPN,SI,TO-92	04713	SPS8246
A10Q602	151-0188-00			TRANSISTOR:PNP,SI,TO-92	80009	151-0188-00
A10Q603	151-0188-00			TRANSISTOR:PNP,SI,TO-92	80009	151-0188-00
A10Q604	151-0188-00			TRANSISTOR:PNP,SI,TO-92	80009	151-0188-00
A10Q605	151-0188-00			TRANSISTOR:PNP,SI,TO-92	80009	151-0188-00
A10Q606	151-0188-00			TRANSISTOR:PNP,SI,TO-92	80009	151-0188-00
A10Q607	151-0188-00			TRANSISTOR:PNP,SI,TO-92	80009	151-0188-00
A10Q608	151-0190-00			TRANSISTOR:NPN,SI,TO-92	80009	151-0190-00
A10Q701	151-0846-00			TRANSISTOR:NPN,SI,5W,TO-39	80009	151-0846-00
A10Q702	151-0846-00			TRANSISTOR:NPN,SI,5W,TO-39	80009	151-0846-00
A10Q703	151-0190-00			TRANSISTOR:NPN,SI,TO-92	80009	151-0190-00
A10Q704	151-0190-00			TRANSISTOR:NPN,SI,TO-92	80009	151-0190-00
A10Q801	151-1212-00			TRANSISTOR:MOSFET,VDMOS,P-CHAN,TO-39	80009	151-1212-00
A10Q802	151-1211-00			TRANSISTOR:MOSFET,VDMOS,N-CHAN,TO-39	80009	151-1211-00
A10Q803	151-0736-00			TRANSISTOR:NPN,SI,TO-92	80009	151-0736-00
A10Q804	151-0712-00			TRANSISTOR:PNP,SI,TO-92	04713	SPS8223
A10Q805	151-1211-00			TRANSISTOR:MOSFET,VDMOS,N-CHAN,TO-39	80009	151-1211-00
A10Q806	151-1212-00			TRANSISTOR:MOSFET,VDMOS,P-CHAN,TO-39	80009	151-1212-00
A10Q807	151-0164-00			TRANSISTOR:PNP,SI,TO-92	04713	2N2907A
A10Q808	151-0711-00			TRANSISTOR:NPN,SI,TO-92B	80009	151-0711-00
A10Q809	151-0711-00			TRANSISTOR:NPN,SI,TO-92B	80009	151-0711-00
A10Q810	151-0711-00			TRANSISTOR:NPN,SI,TO-92B	80009	151-0711-00
A10Q905	151-0622-00			TRANSISTOR:PNP,SI,40V,1A,TO-226AE/237	04713	SPS8956(MPSW51A)
A10Q907	151-0622-00			TRANSISTOR:PNP,SI,40V,1A,TO-226AE/237	04713	SPS8956(MPSW51A)
A10Q908	151-0622-00			TRANSISTOR:PNP,SI,40V,1A,TO-226AE/237	04713	SPS8956(MPSW51A)

http://www.manuals.com

Component No.	Tektronix Part No.	Serial/Assembly No. Effective	Dscont	Name & Description	Mfr. Code	Mfr. Part No.
A10Q1001	151-0424-00			TRANSISTOR:NPN,SI,TO-92	04713	SPS8246
A10Q1002	151-0424-00			TRANSISTOR:NPN,SI,TO-92	04713	SPS8246
A10Q1003	151-0424-00			TRANSISTOR:NPN,SI,TO-92	04713	SPS8246
A10Q1004	151-0424-00			TRANSISTOR:NPN,SI,TO-92	04713	SPS8246
A10Q1005	151-0216-04			TRANSISTOR:PNP,SI,TO-92	04713	SPS8803RL
A10Q1101	151-0216-04			TRANSISTOR:PNP,SI,TO-92	04713	SPS8803RL
A10Q1102	151-0192-05			TRANSISTOR:NPN,SI,TO=92	04713	ORDER BY DESCR
A10Q1103	151-0216-04			TRANSISTOR:PNP,SI,TO-92	04713	SPS8803RL
A10Q1104	151-0192-05			TRANSISTOR:NPN,SI,TO=92	04713	ORDER BY DESCR
A10Q1105	151-0216-04			TRANSISTOR:PNP,SI,TO-92	04713	SPS8803RL
A10Q1106	151-0192-05			TRANSISTOR:NPN,SI,TO=92	04713	ORDER BY DESCR
A10Q2701	151-0164-00			TRANSISTOR:PNP,SI,TO-92	04713	2N2907A
A10Q2702	151-0164-00			TRANSISTOR:PNP,SI,TO-92	04713	2N2907A
A10Q2703	151-0736-00			TRANSISTOR:NPN,SI,TO-92	80009	151-0736-00
A10Q2704	151-0736-00			TRANSISTOR:NPN,SI,TO-92	80009	151-0736-00
A10Q2705	151-0192-05			TRANSISTOR:NPN,SI,TO=92	04713	ORDER BY DESCR
A10Q2706	151-0190-00			TRANSISTOR:NPN,SI,TO-92	80009	151-0190-00
A10Q2707	151-0190-00			TRANSISTOR:NPN,SI,TO-92	80009	151-0190-00
A10Q2708	151-0188-00			TRANSISTOR:PNP,SI,TO-92	80009	151-0188-00
A10Q2709	151-0188-00			TRANSISTOR:PNP,SI,TO-92	80009	151-0188-00
A10Q2711	151-0199-00			TRANSISTOR:PNP,SI,TO-92	27014	ST65057
A10Q2712	151-0347-02			TRANSISTOR:NPN,SI,TO-92	56289	CT7916
A10Q2713	151-0350-00			TRANSISTOR:PNP,SI,TO-92	04713	SPS6700
A10Q2715	151-0190-00			TRANSISTOR:NPN,SI,TO-92	80009	151-0190-00
A10R101	313-1822-00			RES,FXD,FILM:8.2K OHM,5%,0.2W	57668	TR20JE 08K2
A10R102	313-1822-00			RES,FXD,FILM:8.2K OHM,5%,0.2W	57668	TR20JE 08K2
A10R103	313-1822-00			RES,FXD,FILM:8.2K OHM,5%,0.2W	57668	TR20JE 08K2
A10R104	313-1822-00			RES,FXD,FILM:8.2K OHM,5%,0.2W	57668	TR20JE 08K2
A10R105	313-1103-00			RES,FXD,FILM:10K OHM,5%,0.2W	57668	TR20JE10K0
A10R106	313-1103-00			RES,FXD,FILM:10K OHM,5%,0.2W	57668	TR20JE10K0
A10R107	313-1103-00			RES,FXD,FILM:10K OHM,5%,0.2W	57668	TR20JE10K0
A10R108	313-1103-00			RES,FXD,FILM:10K OHM,5%,0.2W	57668	TR20JE10K0
A10R111	315-0620-00			RES,FXD,FILM:62 OHM,5%,0.25W	19701	5043CX63R00J
A10R113	313-1200-00			RES,FXD,FILM:20 OHM,5%,0.2W	57668	TR20JE20E
A10R114	313-1100-00			RES,FXD,FILM:10 OHM,5%,0.2W	57668	TR20JE10E0
A10R115	322-3085-00			RES,FXD,FILM:75 OHM,1%,0.2W,TC=T0	57668	CRB20 FXE 75E0
A10R121	315-0620-00			RES,FXD,FILM:62 OHM,5%,0.25W	19701	5043CX63R00J
A10R123	313-1200-00			RES,FXD,FILM:20 OHM,5%,0.2W	57668	TR20JE20E
A10R124	313-1100-00			RES,FXD,FILM:10 OHM,5%,0.2W	57668	TR20JE10E0
A10R125	322-3085-00			RES,FXD,FILM:75 OHM,1%,0.2W,TC=T0	57668	CRB20 FXE 75E0
A10R131	315-0390-00			RES,FXD,FILM:39 OHM,5%,0.25W	57668	NTR25J-E39E0
A10R132	322-3443-00			RES,FXD,FILM:402K OHM,1%,0.2W,TC=T0	91637	CCF50G40202F
A10R133	322-3443-00			RES,FXD,FILM:402K OHM,1%,0.2W,TC=T0	91637	CCF50G40202F
A10R134	322-3414-00			RES,FXD,FILM:200K OHM,1%,0.2W,TC=T0	91637	CCF50G20002F
A10R135	313-1100-00			RES,FXD,FILM:10 OHM,5%,0.2W	57668	TR20JE10E0
A10R136	322-3284-00			RES,FXD,FILM:8.87K OHM,1%,0.2W,TC=T0	57668	CRB20 FXE 8K87
A10R137	322-3217-00			RES,FXD,FILM:1.78K OHM,1%,0.2W,TC=T0	57668	CRB20 FXE 1K78
A10R138	322-3210-00			RES,FXD,FILM:1.5K OHM,1%,0.2W,TC=T0	57668	CRB20 FXE 1K50
A10R139	322-3085-00			RES,FXD,FILM:75 OHM,1%,0.2W,TC=T0	57668	CRB20 FXE 75E0
A10R140	322-3085-00			RES,FXD,FILM:75 OHM,1%,0.2W,TC=T0	57668	CRB20 FXE 75E0
A10R141	311-2224-00			RES,VAR,NONWW:TRMR,20 OHM,20%,0.5W LINEAR	TK1450	GF06UT
A10R142	322-3056-00			RES,FXD,FILM:37.4 OHM,1%,0.2W,TC=T0	80009	322-3056-00
A10R151	315-0390-00			RES,FXD,FILM:39 OHM,5%,0.25W	57668	NTR25J-E39E0
A10R152	322-3443-00			RES,FXD,FILM:402K OHM,1%,0.2W,TC=T0	91637	CCF50G40202F
A10R153	322-3443-00			RES,FXD,FILM:402K OHM,1%,0.2W,TC=T0	91637	CCF50G40202F
A10R154	322-3414-00			RES,FXD,FILM:200K OHM,1%,0.2W,TC=T0	91637	CCF50G20002F
A10R155	313-1100-00			RES,FXD,FILM:10 OHM,5%,0.2W	57668	TR20JE10E0
A10R156	322-3284-00			RES,FXD,FILM:8.87K OHM,1%,0.2W,TC=T0	57668	CRB20 FXE 8K87

http://www.manuals.com

Component No.	Tektronix Part No.	Serial/Assembly No. Effective	Dscont	Name & Description	Mfr. Code	Mfr. Part No.
A10R157	322-3217-00			RES,FXD,FILM:1.78K OHM,1%,0.2W,TC=T0	57668	CRB20 FXE 1K78
A10R158	322-3210-00			RES,FXD,FILM:1.5K OHM,1%,0.2W,TC=T0	57668	CRB20 FXE 1K50
A10R159	322-3085-00			RES,FXD,FILM:75 OHM,1%,0.2W,TC=T0.	57668	CRB20 FXE 75E0
A10R160	322-3085-00			RES,FXD,FILM:75 OHM,1%,0.2W,TC=T0	57668	CRB20 FXE 75E0
A10R161	311-2224-00			RES,VAR,NONWW:TRMR,20 OHM,20%,0.5W LINEAR	TK1450	GF06UT
A10R162	322-3056-00			RES,FXD,FILM:37.4 OHM,1%,0.2W,TC=T0	80009	322-3056-00
A10R171	313-1471-00			RES,FXD,FILM:470 OHM,5%,0.2W	57668	TR20JE 470E
A10R175	313-1204-00			RES,FXD,FILM:200K,5%,0.2W	57668	TR20JE 200K
A10R176	313-1103-00			RES,FXD,FILM:10K OHM,5%,0.2W	57668	TR20JE10K0
A10R177	313-1472-00			RES,FXD,FILM:4.7K OHM,5%,0.2W	57668	TR20JE 04K7
A10R178	313-1472-00			RES,FXD,FILM:4.7K OHM,5%,0.2W	57668	TR20JE 04K7
A10R179	313-1103-00			RES,FXD,FILM:10K OHM,5%,0.2W	57668	TR20JE10K0
A10R180	313-1101-00			RES,FXD,FILM:100 OHM,5%,0.2W	57668	TR20JE100E
A10R181	313-1101-00			RES,FXD,FILM:100 OHM,5%,0.2W	57668	TR20JE100E
A10R182	308-0058-00			RES,FXD,WW:1.5 OHM,10%,1W	75042	BW-20-1R500K
A10R201	322-3193-00			RES,FXD,FILM:1K OHM,1%,0.2W,TC=T0	57668	CRB20 FXE 1K00
A10R202	322-3193-00			RES,FXD,FILM:1K OHM,1%,0.2W,TC=T0	57668	CRB20 FXE 1K00
A10R203	322-3193-00			RES,FXD,FILM:1K OHM,1%,0.2W,TC=T0	57668	CRB20 FXE 1K00
A10R204	322-3193-00			RES,FXD,FILM:1K OHM,1%,0.2W,TC=T0	57668	CRB20 FXE 1K00
A10R205	322-3150-00			RES,FXD,FILM:357 OHM,1%,0.2W,TC=T0	57668	CRB20 FXE 357E
A10R206	322-3236-00			RES,FXD,FILM:2.8K OHM,1%,0.2W,TC=T0	57668	CRB20 FXE 2K80
A10R207	322-3150-00			RES,FXD,FILM:357 OHM,1%,0.2W,TC=T0	57668	CRB20 FXE 357E
A10R208	313-1100-00			RES,FXD,FILM:10 OHM,5%,0.2W	57668	TR20JE10E0
A10R209	313-1511-00			RES,FXD,FILM:510 OHM,5%,0.2W	57668	TR20JT68 510E
A10R210	313-1331-00			RES,FXD,FILM:330 OHM,5%,0.2W	57668	TR20JE 330E
A10R211	311-2329-00			RES,VAR,NONWW:TRIMMER,5K OHM,10%	32997	3386R-EA5-502
A10R212	313-1511-00			RES,FXD,FILM:510 OHM,5%,0.2W	57668	TR20JT68 510E
A10R213	313-1243-00			RES,FXD,FILM:24K OHM,5%,0.2W	80009	313-1243-00
A10R214	322-3285-00			RES,FXD,FILM:9.09K OHM,1%,0.2W,TC=T0	57668	CRB20 FXE 9K09
A10R215	313-1821-00			RES,FXD,FILM:820 OHM,5%,0.2W	57668	TR20JE 820E
A10R218	322-3237-00			RES,FXD,FILM:2.87K OHM,1%,0.2W,TC=T0	80009	322-3237-00
A10R219	313-1104-00			RES,FXD,FILM:100K OHM,5%,0.2W	57668	TR20JE100K
A10R220	313-1331-00			RES,FXD,FILM:330 OHM,5%,0.2W	57668	TR20JE 330E
A10R221	311-2329-00			RES,VAR,NONWW:TRIMMER,5K OHM,10%	32997	3386R-EA5-502
A10R222	313-1511-00			RES,FXD,FILM:510 OHM,5%,0.2W	57668	TR20JT68 510E
A10R223	313-1243-00			RES,FXD,FILM:24K OHM,5%,0.2W	80009	313-1243-00
A10R224	322-3285-00			RES,FXD,FILM:9.09K OHM,1%,0.2W,TC=T0	57668	CRB20 FXE 9K09
A10R225	313-1472-00			RES,FXD,FILM:4.7K OHM,5%,0.2W	57668	TR20JE 04K7
A10R226	313-1027-00			RES,FXD,FILM:2.7 OHM,5%,0.2W	57668	TR20JE 02E7
A10R227	313-1472-00			RES,FXD,FILM:4.7K OHM,5%,0.2W	57668	TR20JE 04K7
A10R228	322-3237-00			RES,FXD,FILM:2.87K OHM,1%,0.2W,TC=T0	80009	322-3237-00
A10R229	313-1104-00			RES,FXD,FILM:100K OHM,5%,0.2W	57668	TR20JE100K
A10R230	313-1331-00			RES,FXD,FILM:330 OHM,5%,0.2W	57668	TR20JE 330E
A10R231	311-2329-00			RES,VAR,NONWW:TRIMMER,5K OHM,10%	32997	3386R-EA5-502
A10R232	313-1511-00			RES,FXD,FILM:510 OHM,5%,0.2W	57668	TR20JT68 510E
A10R233	313-1243-00			RES,FXD,FILM:24K OHM,5%,0.2W	80009	313-1243-00
A10R234	322-3285-00			RES,FXD,FILM:9.09K OHM,1%,0.2W,TC=T0	57668	CRB20 FXE 9K09
A10R235	322-3237-00			RES,FXD,FILM:2.87K OHM,1%,0.2W,TC=T0	80009	322-3237-00
A10R238	313-1100-00			RES,FXD,FILM:10 OHM,5%,0.2W	57668	TR20JE10E0
A10R240	313-1331-00			RES,FXD,FILM:330 OHM,5%,0.2W	57668	TR20JE 330E
A10R241	311-2329-00			RES,VAR,NONWW:TRIMMER,5K OHM,10%	32997	3386R-EA5-502
A10R242	313-1511-00			RES,FXD,FILM:510 OHM,5%,0.2W	57668	TR20JT68 510E
A10R243	313-1243-00			RES,FXD,FILM:24K OHM,5%,0.2W	80009	313-1243-00
A10R244	322-3285-00			RES,FXD,FILM:9.09K OHM,1%,0.2W,TC=T0	57668	CRB20 FXE 9K09
A10R245	313-1027-00			RES,FXD,FILM:2.7 OHM,5%,0.2W	57668	TR20JE 02E7
A10R248	322-3237-00			RES,FXD,FILM:2.87K OHM,1%,0.2W,TC=T0	80009	322-3237-00
A10R250	307-0792-00			RES NTWK,FXD,FI:7,82 OHM,2%,0.15W EACH	11236	750-81-R82
A10R251	307-0792-00			RES NTWK,FXD,FI:7,82 OHM,2%,0.15W EACH	11236	750-81-R82

http://www.tekmanuals.com

Component No.	Tektronix Part No.	Serial/Assembly No. Effective	Dscont	Name & Description	Mfr. Code	Mfr. Part No.
A10R254	322-3318-00			RES,FXD,FILM:20K OHM,1%,0.2W,TC=T0	57668	CRB20 FXE 20K0
A10R255	322-3318-00			RES,FXD,FILM:20K OHM,1%,0.2W,TC=T0	57668	CRB20 FXE 20K0
A10R256	313-1103-00			RES,FXD,FILM:10K OHM,5%,0.2W	57668	TR20JE10K0
A10R260	311-2234-00			RES,VAR,NONWW:TRMR,5K OHM,20%,0.5W LINEAR	TK1450	GF06UT 5K
A10R261	313-1243-00			RES,FXD,FILM:24K OHM,5%,0.2W	80009	313-1243-00
A10R262	322-3083-00			RES,FXD,FILM:71.5 OHM,1%,0.2W,TC=T0	57668	CRB20 FXE 71E5
A10R263	322-3083-00			RES,FXD,FILM:71.5 OHM,1%,0.2W,TC=T0	57668	CRB20 FXE 71E5
A10R264	322-3083-00			RES,FXD,FILM:71.5 OHM,1%,0.2W,TC=T0	57668	CRB20 FXE 71E5
A10R265	322-3083-00			RES,FXD,FILM:71.5 OHM,1%,0.2W,TC=T0	57668	CRB20 FXE 71E5
A10R266	313-1302-00			RES,FXD,FILM:3K OHM,5%,0.2W	57668	TR20JE 03K0
A10R267	322-3164-00			RES,FXD,FILM:499 OHM,1%,0.2W,TC=T0	57668	CRB20 FXE 499E
A10R268	322-3158-00			RES,FXD,FILM:432 OHM,1%,0.2W,TC=T0	57668	CRB2D FXE 432
A10R269	322-3158-00			RES,FXD,FILM:432 OHM,1%,0.2W,TC=T0	57668	CRB2D FXE 432
A10R270	313-1751-00			RES,FXD,FILM:750 OHM,5%,0.2W	57668	TR20JE 750E
A10R271	313-1912-00			RES,FXD,FILM:9.1K OHM,5%,0.2W	57668	TR20 FXE 9.1K
A10R272	311-2232-00			RES,VAR,NONWW:TRMR,2K OHM,20%,0.5W LINEAR	TK1450	GF06UT 2K
A10R273	311-2230-00			RES,VAR,NONWW:TRMR,500 OHM,20%,0.50 LINEAR	TK1450	GF06UT 500
A10R274	313-1100-00			RES,FXD,FILM:10 OHM,5%,0.2W	57668	TR20JE10E0
A10R275	311-2227-00			RES,VAR,NONWW:TRMR,100 OHM,20%,0.5W LINEAR	TK1450	GF06UT 100
A10R276	322-3213-00			RES,FXD,FILM:1.62K OHM,1%,0.2W,TC=T0	57668	CRB20 FXE 1K62
A10R277	322-3213-00			RES,FXD,FILM:1.62K OHM,1%,0.2W,TC=T0	57668	CRB20 FXE 1K62
A10R278	322-3141-00			RES,FXD,FILM:287 OHM,1%,0.2W,TC=T0	57668	CRB20 FXE 287E
A10R279	322-3141-00			RES,FXD,FILM:287 OHM,1%,0.2W,TC=T0	57668	CRB20 FXE 287E
A10R280	322-3098-00			RES,FXD,FILM:102 OHM,1%,0.2W,TC=T0	57668	CRB20 FXE 102E
A10R281	322-3098-00			RES,FXD,FILM:102 OHM,1%,0.2W,TC=T0	57668	CRB20 FXE 102E
A10R282	313-1100-00			RES,FXD,FILM:10 OHM,5%,0.2W	57668	TR20JE10E0
A10R283	313-1100-00			RES,FXD,FILM:10 OHM,5%,0.2W	57668	TR20JE10E0
A10R284	313-1393-00			RES,FXD,FILM:39K OHM,5%,0.2W	57668	TR20JE 39K
A10R285	313-1393-00			RES,FXD,FILM:39K OHM,5%,0.2W	57668	TR20JE 39K
A10R286	322-3097-00			RES,FXD,FILM:100 OHM,1%,0.2W,TC=T0	57668	CRB20 FXE 100E
A10R287	322-3097-00			RES,FXD,FILM:100 OHM,1%,0.2W,TC=T0	57668	CRB20 FXE 100E
A10R288	322-3193-00			RES,FXD,FILM:1K OHM,1%,0.2W,TC=T0	57668	CRB20 FXE 1K00
A10R289	322-3193-00			RES,FXD,FILM:1K OHM,1%,0.2W,TC=T0	57668	CRB20 FXE 1K00
A10R290	322-3123-00			RES,FXD,FILM:187 OHM,1%,0.2W,TC=T0	57668	CRB20 FXE 187E
A10R291	322-3123-00			RES,FXD,FILM:187 OHM,1%,0.2W,TC=T0	57668	CRB20 FXE 187E
A10R292	313-1752-00			RES,FXD,FILM:7.5K OHM,5%,0.2W	57668	TR20JE 07K5
A10R293	313-1752-00			RES,FXD,FILM:7.5K OHM,5%,0.2W	57668	TR20JE 07K5
A10R294	313-1202-00			RES,FXD,FILM:2K OHM,5%,0.2W	57668	TR20JE02K0
A10R295	313-1302-00			RES,FXD,FILM:3K OHM,5%,0.2W	57668	TR20JE 03K0
A10R296	322-3117-00			RES,FXD,FILM:162 OHM,1%,0.2W,TC=T0	57668	CRB 20 FXE 162E
A10R297	313-1100-00			RES,FXD,FILM:10 OHM,5%,0.2W	57668	TR20JE10E0
A10R298	313-1027-00			RES,FXD,FILM:2.7 OHM,5%,0.2W	57668	TR20JE 02E7
A10R301	313-1102-00			RES,FXD,FILM:1K OHM,5%,0.2W	57668	TR20JE01K0
A10R302	313-1027-00			RES,FXD,FILM:2.7 OHM,5%,0.2W	57668	TR20JE 02E7
A10R303	313-1102-00			RES,FXD,FILM:1K OHM,5%,0.2W	57668	TR20JE01K0
A10R304	313-1470-00			RES,FXD,FILM:47 OHM,5%,0.2W	57668	TR20JE 47E
A10R305	313-1511-00			RES,FXD,FILM:510 OHM,5%,0.2W	57668	TR20JT68 510E
A10R306	313-1051-00			RES,FXD,FILM:5.1 OHM,5%,0.2W	57668	TR20JT68 05E1
A10R307	322-3328-02			RES,FXD,FILM:25.5K OHM,0.5%,0.2W,TC=T2	57668	CRB20 DYE 25K5
A10R308	322-3319-02			RES,FXD,FILM:20.5K OHM,0.5%,0.2W,TC=T2	57668	CRB20 DYE 20K5
A10R309	322-3289-00			RES,FXD,FILM:10K OHM,1%,0.2W,TC=T0	57668	CRB20 FXE 10K0
A10R310	313-1473-00			RES,FXD,FILM:47K OHM,5%,0.2W	57668	TR20JE 47K
A10R311	322-3269-02			RES,FXD,FILM:6.19K OHM,0.2W,5%	57668	CRB DYE 6K19
A10R312	313-1100-00			RES,FXD,FILM:10 OHM,5%,0.2W	57668	TR20JE10E0
A10R313	307-2132-00			RES NTWK,FXD,FI:REF VOLTAGE DIVIDER	80009	307-2132-00
A10R314	322-3333-02			RES,FXD,FILM:28.7K OHM,0.2W,5%	57668	CRB20 DYE 28K7
A10R315	313-1470-00			RES,FXD,FILM:47 OHM,5%,0.2W	57668	TR20JE 47E
A10R316	313-1270-00			RES,FXD,FILM:27 OHM 5%,0.2W	57668	TR20JT68 27E

http://www.manuals.com

Component No.	Tektronix Part No.	Serial/Assembly No. Effective	Dscont	Name & Description	Mfr. Code	Mfr. Part No.
A10R317	313-1101-00			RES,FXD,FILM:100 OHM,5%,0.2W	57668	TR20JE100E
A10R318	313-1681-00			RES,FXD,FILM:680 OHM,5%,0.2W	57668	TR20JE 680E
A10R319	313-1562-00			RES,FXD,FILM:5.6K OHM,5%,0.2W	57668	TR20JE 05K6
A10R320	313-1470-00			RES,FXD,FILM:47 OHM,5%,0.2W	57668	TR20JE 47E
A10R321	307-2133-00			RES NTWK,FXD,FI:RESISTOR NETWORK	80009	307-2133-00
A10R322	313-1512-00			RES,FXD,FILM:5.1K OHM,5%,0.2W	57668	TR20JE 5K1
A10R323	313-1512-00			RES,FXD,FILM:5.1K OHM,5%,0.2W	57668	TR20JE 5K1
A10R325	313-1132-00			RES,FXD,FILM:1.3K OHM,5%,0.2W	57668	TR20JE01K3
A10R326	313-1132-00			RES,FXD,FILM:1.3K OHM,5%,0.2W	57668	TR20JE01K3
A10R327	313-1470-00			RES,FXD,FILM:47 OHM,5%,0.2W	57668	TR20JE 47E
A10R328	313-1101-00			RES,FXD,FILM:100 OHM,5%,0.2W	57668	TR20JE100E
A10R329	313-1101-00			RES,FXD,FILM:100 OHM,5%,0.2W	57668	TR20JE100E
A10R330	313-1101-00			RES,FXD,FILM:100 OHM,5%,0.2W	57668	TR20JE100E
A10R331	313-1392-00			RES,FXD,FILM:3.9K OHM,5%,0.2W	57668	TR20JE 03K9
A10R332	313-1820-00			RES,FXD,FILM:82 OHM,5%,0.2W	57668	TR20JE 82E
A10R333	313-1120-00			RES,FXD,FILM:12 OHM,5%,0.2W	57668	TR20JE12E0
A10R334	313-1161-00			RES,FXD,FILM:160 OHM,5%,0.2W	57668	TR20JE160E
A10R335	313-1162-00			RES,FXD,FILM:1.6K OHM,5%,0.2W	57668	TR20JT681K6
A10R336	313-1162-00			RES,FXD,FILM:1.6K OHM,5%,0.2W	57668	TR20JT681K6
A10R337	313-1151-00			RES,FXD,FILM:150 OHM,5%,0.2W	57668	TR20JE150E
A10R338	313-1132-00			RES,FXD,FILM:1.3K OHM,5%,0.2W	57668	TR20JE01K3
A10R339	313-1100-00			RES,FXD,FILM:10 OHM,5%,0.2W	57668	TR20JE10E0
A10R340	313-1820-00			RES,FXD,FILM:82 OHM,5%,0.2W	57668	TR20JE 82E
A10R341	313-1162-00			RES,FXD,FILM:1.6K OHM,5%,0.2W	57668	TR20JT681K6
A10R342	313-1132-00			RES,FXD,FILM:1.3K OHM,5%,0.2W	57668	TR20JE01K3
A10R343	313-1162-00			RES,FXD,FILM:1.6K OHM,5%,0.2W	57668	TR20JT681K6
A10R344	313-1332-00			RES,FXD,FILM:3.3K OHM,5%,0.2W	57668	TR20JE 03K3
A10R345	313-1100-00			RES,FXD,FILM:10 OHM,5%,0.2W	57668	TR20JE10E0
A10R346	313-1101-00			RES,FXD,FILM:100 OHM,5%,0.2W	57668	TR20JE100E
A10R347	313-1202-00			RES,FXD,FILM:2K OHM,5%,0.2W	57668	TR20JE02K0
A10R348	322-3193-00			RES,FXD,FILM:1K OHM,1%,0.2W,TC=T0	57668	CRB20 FXE 1K00
A10R349	322-3193-00			RES,FXD,FILM:1K OHM,1%,0.2W,TC=T0	57668	CRB20 FXE 1K00
A10R350	307-0540-00			RES NTWK,FXD,FI:(5)1K OHM,10%,0.7W	11236	750-61-R1KOHM
A10R351	315-0155-00			RES,FXD,FILM:1.5M OHM,5%,0.25W	19701	5043CX1M500J
A10R352	322-3193-00			RES,FXD,FILM:1K OHM,1%,0.2W,TC=T0	57668	CRB20 FXE 1K00
A10R353	313-1152-00			RES,FXD,FILM:1.5K OHM,5%,0.2W	57668	TR20JE01K5
A10R354	313-1101-00			RES,FXD,FILM:100 OHM,5%,0.2W	57668	TR20JE100E
A10R355	313-1681-00			RES,FXD,FILM:680 OHM,5%,0.2W	57668	TR20JE 680E
A10R356	313-1562-00			RES,FXD,FILM:5.6K OHM,5%,0.2W	57668	TR20JE 05K6
A10R357	307-0540-00			RES NTWK,FXD,FI:(5)1K OHM,10%,0.7W	11236	750-61-R1KOHM
A10R358	313-1561-00			RES,FXD,FILM:560 OHM,5%,0.2W	57668	TR20JE 560E
A10R359	313-1162-00			RES,FXD,FILM:1.6K OHM,5%,0.2W	57668	TR20JT681K6
A10R360	313-1162-00			RES,FXD,FILM:1.6K OHM,5%,0.2W	57668	TR20JT681K6
A10R361	313-1200-00			RES,FXD,FILM:20 OHM,5%,0.2W	57668	TR20JE20E
A10R362	313-1362-00			RES,FXD,FILM:3.6K OHM,5%,0.2W	57668	TR20JE 03K6
A10R363	313-1362-00			RES,FXD,FILM:3.6K OHM,5%,0.2W	57668	TR20JE 03K6
A10R364	313-1511-00			RES,FXD,FILM:510 OHM,5%,0.2W	57668	TR20JT68 510E
A10R365	313-1132-00			RES,FXD,FILM:1.3K OHM,5%,0.2W	57668	TR20JE01K3
A10R366	313-1102-00			RES,FXD,FILM:1K OHM,5%,0.2W	57668	TR20JE01K0
A10R367	313-1102-00			RES,FXD,FILM:1K OHM,5%,0.2W	57668	TR20JE01K0
A10R369	313-1331-00			RES,FXD,FILM:330 OHM,5%,0.2W	57668	TR20JE 330E
A10R370	313-1820-00			RES,FXD,FILM:82 OHM,5%,0.2W	57668	TR20JE 82E
A10R371	313-1120-00			RES,FXD,FILM:12 OHM,5%,0.2W	57668	TR20JE12E0
A10R372	313-1200-00			RES,FXD,FILM:20 OHM,5%,0.2W	57668	TR20JE20E
A10R373	313-1820-00			RES,FXD,FILM:82 OHM,5%,0.2W	57668	TR20JE 82E
A10R374	313-1100-00			RES,FXD,FILM:10 OHM,5%,0.2W	57668	TR20JE10E0
A10R375	313-1101-00			RES,FXD,FILM:100 OHM,5%,0.2W	57668	TR20JE100E
A10R376	313-1332-00			RES,FXD,FILM:3.3K OHM,5%,0.2W	57668	TR20JE 03K3

http://www.manuals.hk

Component No.	Tektronix Part No.	Serial/Assembly No. Effective	Dscont	Name & Description	Mfr. Code	Mfr. Part No.
A10R377	322-3193-00			RES,FXD,FILM:1K OHM,1%,0.2W,TC=T0	57668	CRB20 FXE 1K00
A10R378	313-1820-00			RES,FXD,FILM:82 OHM,5%,0.2W	57668	TR20JE 82E
A10R379	322-3193-00			RES,FXD,FILM:1K OHM,1%,0.2W,TC=T0	57668	CRB20 FXE 1K00
A10R380	313-1820-00			RES,FXD,FILM:82 OHM,5%,0.2W	57668	TR20JE 82E
A10R381	313-1270-00			RES,FXD,FILM:27 OHM 5%,0.2W	57668	TR20JT68 27E
A10R382	322-3193-00			RES,FXD,FILM:1K OHM,1%,0.2W,TC=T0	57668	CRB20 FXE 1K00
A10R383	313-1161-00			RES,FXD,FILM:160 OHM,5%,0.2W	57668	TR20JE160E
A10R384	313-1512-00			RES,FXD,FILM:5.1K OHM,5%,0.2W	57668	TR20JE 5K1
A10R385	313-1162-00			RES,FXD,FILM:1.6K OHM,5%,0.2W	57668	TR20JT681K6
A10R386	313-1162-00			RES,FXD,FILM:1.6K OHM,5%,0.2W	57668	TR20JT681K6
A10R387	313-1820-00			RES,FXD,FILM:82 OHM,5%,0.2W	57668	TR20JE 82E
A10R388	313-1820-00			RES,FXD,FILM:82 OHM,5%,0.2W	57668	TR20JE 82E
A10R390	313-1100-00			RES,FXD,FILM:10 OHM,5%,0.2W	57668	TR20JE10E0
A10R391	313-1203-00			RES,FXD,FILM:20K OHM,5%,0.2W	57668	TR20JE20K
A10R392	313-1514-00			RES,FXD,FILM:510K OHM,5%,0.2W	57668	TR20JE 510K
A10R393	313-1471-00			RES,FXD,FILM:470 OHM,5%,0.2W	57668	TR20JE 470E
A10R394	313-1471-00			RES,FXD,FILM:470 OHM,5%,0.2W	57668	TR20JE 470E
A10R395	313-1102-00			RES,FXD,FILM:1K OHM,5%,0.2W	57668	TR20JE01K0
A10R396	313-1102-00			RES,FXD,FILM:1K OHM,5%,0.2W	57668	TR20JE01K0
A10R410	313-1511-00			RES,FXD,FILM:510 OHM,5%,0.2W	57668	TR20JT68 510E
A10R411	313-1101-00			RES,FXD,FILM:100 OHM,5%,0.2W	57668	TR20JE100E
A10R412	313-1101-00			RES,FXD,FILM:100 OHM,5%,0.2W	57668	TR20JE100E
A10R413	313-1511-00			RES,FXD,FILM:510 OHM,5%,0.2W	57668	TR20JT68 510E
A10R414	313-1511-00			RES,FXD,FILM:510 OHM,5%,0.2W	57668	TR20JT68 510E
A10R415	313-1101-00			RES,FXD,FILM:100 OHM,5%,0.2W	57668	TR20JE100E
A10R416	313-1101-00			RES,FXD,FILM:100 OHM,5%,0.2W	57668	TR20JE100E
A10R417	313-1511-00			RES,FXD,FILM:510 OHM,5%,0.2W	57668	TR20JT68 510E
A10R420	313-1271-00			RES,FXD,FILM:270 OHM,5%,0.2W	57668	TR20JE 270E
A10R421	322-3279-00			RES,FXD,FILM:7.87K OHM,1%,0.2W,TC=T0	57668	CRB20 FXE 7K87
A10R422	322-3279-00			RES,FXD,FILM:7.87K OHM,1%,0.2W,TC=T0	57668	CRB20 FXE 7K87
A10R423	322-3279-00			RES,FXD,FILM:7.87K OHM,1%,0.2W,TC=T0	57668	CRB20 FXE 7K87
A10R424	322-3279-00			RES,FXD,FILM:7.87K OHM,1%,0.2W,TC=T0	57668	CRB20 FXE 7K87
A10R425	313-1750-00			RES,FXD,FILM:75 OHM,5%,0.2W	57668	TR20JE 75E
A10R426	313-1101-00			RES,FXD,FILM:100 OHM,5%,0.2W	57668	TR20JE100E
A10R430	313-1271-00			RES,FXD,FILM:270 OHM,5%,0.2W	57668	TR20JE 270E
A10R431	313-1750-00			RES,FXD,FILM:75 OHM,5%,0.2W	57668	TR20JE 75E
A10R432	322-3074-00			RES,FXD,FILM:57.6 OHM,1%,0.2W,TC=T0	80009	322-3074-00
A10R440	313-1104-00			RES,FXD,FILM:100K OHM,5%,0.2W	57668	TR20JE100K
A10R441	313-1621-00			RES,FXD,FILM:620 OHM,5%,0.2W	57668	TR20JE 620E
A10R442	313-1562-00			RES,FXD,FILM:5.6K OHM,5%,0.2W	57668	TR20JE 05K6
A10R443	313-1562-00			RES,FXD,FILM:5.6K OHM,5%,0.2W	57668	TR20JE 05K6
A10R444	313-1561-00			RES,FXD,FILM:560 OHM,5%,0.2W	57668	TR20JE 560E
A10R445	322-3143-00			RES,FXD,FILM:301 OHM,1%,0.2W,TC=T0	57668	CRB20 FXE 301E
A10R446	313-1331-00			RES,FXD,FILM:330 OHM,5%,0.2W	57668	TR20JE 330E
A10R447	322-3193-00			RES,FXD,FILM:1K OHM,1%,0.2W,TC=T0	57668	CRB20 FXE 1K00
A10R448	322-3251-00			RES,FXD,FILM:4.02K OHM,1%,0.2W,TC=T0	57668	CRB20 FXE 4K02
A10R449	313-1392-00			RES,FXD,FILM:3.9K OHM,5%,0.2W	57668	TR20JE 03K9
A10R450	313-1271-00			RES,FXD,FILM:270 OHM,5%,0.2W	57668	TR20JE 270E
A10R451	322-3279-00			RES,FXD,FILM:7.87K OHM,1%,0.2W,TC=T0	57668	CRB20 FXE 7K87
A10R452	322-3279-00			RES,FXD,FILM:7.87K OHM,1%,0.2W,TC=T0	57668	CRB20 FXE 7K87
A10R453	322-3279-00			RES,FXD,FILM:7.87K OHM,1%,0.2W,TC=T0	57668	CRB20 FXE 7K87
A10R454	322-3279-00			RES,FXD,FILM:7.87K OHM,1%,0.2W,TC=T0	57668	CRB20 FXE 7K87
A10R455	311-2230-00			RES,VAR,NONWW:TRMR,500 OHM,20%,0.50 LINEAR	TK1450	GF06UT 500
A10R456	313-1103-00			RES,FXD,FILM:10K OHM,5%,0.2W	57668	TR20JE10K0
A10R460	313-1271-00			RES,FXD,FILM:270 OHM,5%,0.2W	57668	TR20JE 270E
A10R461	313-1101-00			RES,FXD,FILM:100 OHM,5%,0.2W	57668	TR20JE100E
A10R462	322-3074-00			RES,FXD,FILM:57.6 OHM,1%,0.2W,TC=T0	80009	322-3074-00
A10R463	313-1120-00			RES,FXD,FILM:12 OHM,5%,0.2W	57668	TR20JE12E0

http://www.manuals.com

Component No.	Tektronix Part No.	Serial/Assembly No. Effective	Dscont	Name & Description	Mfr. Code	Mfr. Part No.
A10R470	313-1104-00			RES,FXD,FILM:100K OHM,5%,0.2W	57668	TR20JE100K
A10R471	313-1621-00			RES,FXD,FILM:620 OHM,5%,0.2W	57668	TR20JE 620E
A10R472	313-1562-00			RES,FXD,FILM:5.6K OHM,5%,0.2W	57668	TR20JE 05K6
A10R473	313-1562-00			RES,FXD,FILM:5.6K OHM,5%,0.2W	57668	TR20JE 05K6
A10R474	313-1561-00			RES,FXD,FILM:560 OHM,5%,0.2W	57668	TR20JE 560E
A10R475	322-3143-00			RES,FXD,FILM:301 OHM,1%,0.2W,TC=T0	57668	CRB20 FXE 301E
A10R476	313-1392-00			RES,FXD,FILM:3.9K OHM,5%,0.2W	57668	TR20JE 03K9
A10R477	322-3193-00			RES,FXD,FILM:1K OHM,1%,0.2W,TC=T0	57668	CRB20 FXE 1K00
A10R478	322-3251-00			RES,FXD,FILM:4.02K OHM,1%,0.2W,TC=T0	57668	CRB20 FXE 4K02
A10R481	313-1051-00			RES,FXD,FILM:5.1 OHM,5%,0.2W	57668	TR20JT68 05E1
A10R483	313-1151-00			RES,FXD,FILM:150 OHM,5%,0.2W	57668	TR20JE150E
A10R484	313-1202-00			RES,FXD,FILM:2K OHM,5%,0.2W	57668	TR20JE02K0
A10R485	313-1392-00			RES,FXD,FILM:3.9K OHM,5%,0.2W	57668	TR20JE 03K9
A10R486	313-1512-00			RES,FXD,FILM:5.1K OHM,5%,0.2W	57668	TR20JE 5K1
A10R487	313-1331-00			RES,FXD,FILM:330 OHM,5%,0.2W	57668	TR20JE 330E
A10R490	313-1511-00			RES,FXD,FILM:510 OHM,5%,0.2W	57668	TR20JT68 510E
A10R491	313-1511-00			RES,FXD,FILM:510 OHM,5%,0.2W	57668	TR20JT68 510E
A10R492	313-1511-00			RES,FXD,FILM:510 OHM,5%,0.2W	57668	TR20JT68 510E
A10R493	313-1511-00			RES,FXD,FILM:510 OHM,5%,0.2W	57668	TR20JT68 510E
A10R494	313-1511-00			RES,FXD,FILM:510 OHM,5%,0.2W	57668	TR20JT68 510E
A10R495	313-1511-00			RES,FXD,FILM:510 OHM,5%,0.2W	57668	TR20JT68 510E
A10R496	313-1511-00			RES,FXD,FILM:510 OHM,5%,0.2W	57668	TR20JT68 510E
A10R497	313-1511-00			RES,FXD,FILM:510 OHM,5%,0.2W	57668	TR20JT68 510E
A10R498	313-1511-00			RES,FXD,FILM:510 OHM,5%,0.2W	57668	TR20JT68 510E
A10R501	307-0446-00			RES NTWK,FXD,FI:10K OHM,20%,(9)RES	11236	750-101-R10K
A10R502	313-1103-00			RES,FXD,FILM:10K OHM,5%,0.2W	57668	TR20JE10K0
A10R503	313-1103-00			RES,FXD,FILM:10K OHM,5%,0.2W	57668	TR20JE10K0
A10R504	313-1101-00			RES,FXD,FILM:100 OHM,5%,0.2W	57668	TR20JE100E
A10R505	313-1103-00			RES,FXD,FILM:10K OHM,5%,0.2W	57668	TR20JE10K0
A10R506	313-1103-00			RES,FXD,FILM:10K OHM,5%,0.2W	57668	TR20JE10K0
A10R507	313-1103-00			RES,FXD,FILM:10K OHM,5%,0.2W	57668	TR20JE10K0
A10R508	313-1103-00			RES,FXD,FILM:10K OHM,5%,0.2W	57668	TR20JE10K0
A10R510	313-1103-00			RES,FXD,FILM:10K OHM,5%,0.2W	57668	TR20JE10K0
A10R512	313-1103-00			RES,FXD,FILM:10K OHM,5%,0.2W	57668	TR20JE10K0
A10R601	313-1102-00			RES,FXD,FILM:1K OHM,5%,0.2W	57668	TR20JE01K0
A10R602	322-3193-00			RES,FXD,FILM:1K OHM,1%,0.2W,TC=T0	57668	CRB20 FXE 1K00
A10R603	322-3193-00			RES,FXD,FILM:1K OHM,1%,0.2W,TC=T0	57668	CRB20 FXE 1K00
A10R604	322-3231-00			RES,FXD,FILM:2.49K OHM,1%,0.2W,TC=T0	57668	CRB20 FXE 2K49
A10R605	322-3193-00			RES,FXD,FILM:1K OHM,1%,0.2W,TC=T0	57668	CRB20 FXE 1K00
A10R606	313-1102-00			RES,FXD,FILM:1K OHM,5%,0.2W	57668	TR20JE01K0
A10R607	313-1510-00			RES,FXD,FILM:51 OHM,5%,0.2W	80009	313-1510-00
A10R609	313-1101-00			RES,FXD,FILM:100 OHM,5%,0.2W	57668	TR20JE100E
A10R610	313-1391-00			RES,FXD,FILM:390 OHM,5%,0.2W	57668	TR20JE 390E
A10R611	313-1101-00			RES,FXD,FILM:100 OHM,5%,0.2W	57668	TR20JE100E
A10R612	313-1391-00			RES,FXD,FILM:390 OHM,5%,0.2W	57668	TR20JE 390E
A10R613	313-1101-00			RES,FXD,FILM:100 OHM,5%,0.2W	57668	TR20JE100E
A10R614	313-1391-00			RES,FXD,FILM:390 OHM,5%,0.2W	57668	TR20JE 390E
A10R615	313-1471-00			RES,FXD,FILM:470 OHM,5%,0.2W	57668	TR20JE 470E
A10R616	313-1471-00			RES,FXD,FILM:470 OHM,5%,0.2W	57668	TR20JE 470E
A10R617	313-1471-00			RES,FXD,FILM:470 OHM,5%,0.2W	57668	TR20JE 470E
A10R618	313-1821-00			RES,FXD,FILM:820 OHM,5%,0.2W	57668	TR20JE 820E
A10R619	313-1821-00			RES,FXD,FILM:820 OHM,5%,0.2W	57668	TR20JE 820E
A10R620	313-1821-00			RES,FXD,FILM:820 OHM,5%,0.2W	57668	TR20JE 820E
A10R621	313-1302-00			RES,FXD,FILM:3K OHM,5%,0.2W	57668	TR20JE 03K0
A10R622	313-1302-00			RES,FXD,FILM:3K OHM,5%,0.2W	57668	TR20JE 03K0
A10R623	313-1302-00			RES,FXD,FILM:3K OHM,5%,0.2W	57668	TR20JE 03K0
A10R624	313-1102-00			RES,FXD,FILM:1K OHM,5%,0.2W	57668	TR20JE01K0
A10R625	313-1221-00			RES,FXD,FILM:220 OHM,5%,0.2W	57668	TR20JE220E

http://www.xiufan.com

Component No.	Tektronix Part No.	Serial/Assembly No. Effective	Dscont	Name & Description	Mfr. Code	Mfr. Part No.
A10R626	313-1390-00			RES,FXD,FILM:39 OHM,5%,0.2W	57668	TR20JE 39E
A10R627	313-1390-00			RES,FXD,FILM:39 OHM,5%,0.2W	57668	TR20JE 39E
A10R628	307-0503-00			RES NTWK,FXD,FI:(9) 510 OHM,20%,0.125W	11236	750-101-R510
A10R630	313-1103-00			RES,FXD,FILM:10K OHM,5%,0.2W	57668	TR20JE10K0
A10R631	313-1102-00			RES,FXD,FILM:1K OHM,5%,0.2W	57668	TR20JE01K0
A10R636	313-1273-00			RES,FXD,FILM:27K OHM,5%,0.2W	57668	TR20JE 27K
A10R637	313-1822-00			RES,FXD,FILM:8.2K,OHM,5%,0.2W	57668	TR20JE 08K2
A10R638	313-1753-00			RES,FXD,FILM:75K OHM,5%,0.2W	57668	TR20JE 75K
A10R639	313-1512-00			RES,FXD,FILM:5.1K OHM,5%,0.2W	57668	TR20JE 5K1
A10R640	313-1512-00			RES,FXD,FILM:5.1K OHM,5%,0.2W	57668	TR20JE 5K1
A10R641	313-1821-00			RES,FXD,FILM:820 OHM,5%,0.2W	57668	TR20JE 820E
A10R642	313-1821-00			RES,FXD,FILM:820 OHM,5%,0.2W	57668	TR20JE 820E
A10R643	313-1562-00			RES,FXD,FILM:5.6K OHM,5%,0.2W	57668	TR20JE 05K6
A10R644	313-1562-00			RES,FXD,FILM:5.6K OHM,5%,0.2W	57668	TR20JE 05K6
A10R645	313-1562-00			RES,FXD,FILM:5.6K OHM,5%,0.2W	57668	TR20JE 05K6
A10R646	313-1562-00			RES,FXD,FILM:5.6K OHM,5%,0.2W	57668	TR20JE 05K6
A10R647	313-1821-00			RES,FXD,FILM:820 OHM,5%,0.2W	57668	TR20JE 820E
A10R648	313-1471-00			RES,FXD,FILM:470 OHM,5%,0.2W	57668	TR20JE 470E
A10R649	313-1302-00			RES,FXD,FILM:3K OHM,5%,0.2W	57668	TR20JE 03K0
A10R650	313-1751-00			RES,FXD,FILM:750 OHM,5%,0.2W	57668	TR20JE 750E
A10R651	313-1331-00			RES,FXD,FILM:330 OHM,5%,0.2W	57668	TR20JE 330E
A10R652	313-1331-00			RES,FXD,FILM:330 OHM,5%,0.2W	57668	TR20JE 330E
A10R653	313-1471-00			RES,FXD,FILM:470 OHM,5%,0.2W	57668	TR20JE 470E
A10R654	313-1302-00			RES,FXD,FILM:3K OHM,5%,0.2W	57668	TR20JE 03K0
A10R655	313-1821-00			RES,FXD,FILM:820 OHM,5%,0.2W	57668	TR20JE 820E
A10R656	313-1621-00			RES,FXD,FILM:620 OHM,5%,0.2W	57668	TR20JE 620E
A10R657	313-1621-00			RES,FXD,FILM:620 OHM,5%,0.2W	57668	TR20JE 620E
A10R658	313-1302-00			RES,FXD,FILM:3K OHM,5%,0.2W	57668	TR20JE 03K0
A10R659	313-1302-00			RES,FXD,FILM:3K OHM,5%,0.2W	57668	TR20JE 03K0
A10R662	313-1393-00			RES,FXD,FILM:39K OHM,5%,0.2W	57668	TR20JE 39K
A10R663	313-1393-00			RES,FXD,FILM:39K OHM,5%,0.2W	57668	TR20JE 39K
A10R664	313-1393-00			RES,FXD,FILM:39K OHM,5%,0.2W	57668	TR20JE 39K
A10R665	313-1393-00			RES,FXD,FILM:39K OHM,5%,0.2W	57668	TR20JE 39K
A10R666	313-1393-00			RES,FXD,FILM:39K OHM,5%,0.2W	57668	TR20JE 39K
A10R669	313-1511-00			RES,FXD,FILM:510 OHM,5%,0.2W	57668	TR20JT68 510E
A10R670	313-1511-00			RES,FXD,FILM:510 OHM,5%,0.2W	57668	TR20JT68 510E
A10R671	313-1180-00			RES,FXD,FILM:18 OHM,5%,0.2W	80009	313-1180-00
A10R672	313-1333-00			RES,FXD,FILM:33K OHM,5%,0.2W	57668	TR20JE 33K
A10R701	322-3226-00			RES,FXD,FILM:2.21K OHM,1%,0.2W,TC=T0	57668	CRB20 FXE 2K21
A10R702	313-1222-00			RES,FXD,FILM:2.2K OHM,5%,0.2W	57668	TR20JE 02K2
A10R703	311-2230-00			RES,VAR,NONWW:TRMR,500 OHM,20%,0.50 LINEAR	TK1450	GF06UT 500
A10R706	322-3085-00			RES,FXD,FILM:75 OHM,1%,0.2W,TC=T0	57668	CRB20 FXE 75E0
A10R707	322-3085-00			RES,FXD,FILM:75 OHM,1%,0.2W,TC=T0	57668	CRB20 FXE 75E0
A10R708	307-2130-00			RES NTWK,FXD,FI:DUAL LOAD RESISTOR	80009	307-2130-00
A10R709	313-1027-00			RES,FXD,FILM:2.7 OHM,5%,0.2W	57668	TR20JE 02E7
A10R710	313-1134-00			RES,FXD,FILM:130K OHM 5%,0.2W	57668	TR20JT68 130K
A10R711	313-1100-00			RES,FXD,FILM:10 OHM,5%,0.2W	57668	TR20JE10E0
A10R712	313-1100-00			RES,FXD,FILM:10 OHM,5%,0.2W	57668	TR20JE10E0
A10R715	313-1103-00			RES,FXD,FILM:10K OHM,5%,0.2W	57668	TR20JE10K0
A10R716	313-1103-00			RES,FXD,FILM:10K OHM,5%,0.2W	57668	TR20JE10K0
A10R717	313-1102-00			RES,FXD,FILM:1K OHM,5%,0.2W	57668	TR20JE01K0
A10R718	313-1102-00			RES,FXD,FILM:1K OHM,5%,0.2W	57668	TR20JE01K0
A10R719	313-1200-00			RES,FXD,FILM:20 OHM,5%,0.2W	57668	TR20JE20E
A10R720	313-1200-00			RES,FXD,FILM:20 OHM,5%,0.2W	57668	TR20JE20E
A10R721	313-1134-00			RES,FXD,FILM:130K OHM 5%,0.2W	57668	TR20JT68 130K
A10R722	313-1134-00			RES,FXD,FILM:130K OHM 5%,0.2W	57668	TR20JT68 130K
A10R723	313-1027-00			RES,FXD,FILM:2.7 OHM,5%,0.2W	57668	TR20JE 02E7
A10R724	311-2234-00			RES,VAR,NONWW:TRMR,5K OHM,20%,0.5W LINEAR	TK1450	GF06UT 5K

http://www.manuals.com

Component No.	Tektronix Part No.	Serial/Assembly No. Effective	Dscont	Name & Description	Mfr. Code	Mfr. Part No.
A10R725	313-1102-00			RES,FXD,FILM:1K OHM,5%,0.2W	57668	TR20JE01K0
A10R726	313-1103-00			RES,FXD,FILM:10K OHM,5%,0.2W	57668	TR20JE10K0
A10R727	313-1104-00			RES,FXD,FILM:100K OHM,5%,0.2W	57668	TR20JE100K
A10R728	313-1824-00			RES,FXD,FILM:820K OHM,0.2W,5%	80009	313-1824-00
A10R729	313-1202-00			RES,FXD,FILM:2K OHM,5%,0.2W	57668	TR20JE02K0
A10R730	313-1102-00			RES,FXD,FILM:1K OHM,5%,0.2W	57668	TR20JE01K0
A10R731	313-1750-00			RES,FXD,FILM:75 OHM,5%,0.2W	57668	TR20JE 75E
A10R732	313-1750-00			RES,FXD,FILM:75 OHM,5%,0.2W	57668	TR20JE 75E
A10R733	313-1027-00			RES,FXD,FILM:2.7 OHM,5%,0.2W	57668	TR20JE 02E7
A10R734	313-1120-00			RES,FXD,FILM:12 OHM,5%,0.2W	57668	TR20JE12E0
A10R801	313-1431-00			RES,FXD,FILM:430 OHM,5%,0.2W	57668	TR20JE 430E
A10R802	313-1750-00			RES,FXD,FILM:75 OHM,5%,0.2W	57668	TR20JE 75E
A10R803	313-1562-00			RES,FXD,FILM:5.6K OHM,5%,0.2W	57668	TR20JE 05K6
A10R804	313-1104-00			RES,FXD,FILM:100K OHM,5%,0.2W	57668	TR20JE100K
A10R805	313-1182-00			RES,FXD,FILM:1.8K OHM 5%,0.2W	57668	TR20JT681K8
A10R806	323-0310-00			RES,FXD,FILM:16.5K OHM,1%,0.5W,TC=T0	75042	CECT0-1652F
A10R807	313-1750-00			RES,FXD,FILM:75 OHM,5%,0.2W	57668	TR20JE 75E
A10R808	313-1242-00			RES,FXD,FILM:2.4K OHM,5%,0.2W	57668	TR20JE 02K4
A10R809	311-2234-00			RES,VAR,NONWW:TRMR,5K OHM,20%,0.5W LINEAR	TK1450	GF06UT 5K
A10R810	313-1242-00			RES,FXD,FILM:2.4K OHM,5%,0.2W	57668	TR20JE 02K4
A10R811	322-3266-00			RES,FXD,FILM:5.76K OHM,1%,0.2W,TC=T0	57668	CRB20 FXE 5K76
A10R812	322-3266-00			RES,FXD,FILM:5.76K OHM,1%,0.2W,TC=T0	57668	CRB20 FXE 5K76
A10R813	313-1431-00			RES,FXD,FILM:430 OHM,5%,0.2W	57668	TR20JE 430E
A10R814	313-1562-00			RES,FXD,FILM:5.6K OHM,5%,0.2W	57668	TR20JE 05K6
A10R815	313-1104-00			RES,FXD,FILM:100K OHM,5%,0.2W	57668	TR20JE100K
A10R816	323-0310-00			RES,FXD,FILM:16.5K OHM,1%,0.5W,TC=T0	75042	CECT0-1652F
A10R819	313-1750-00			RES,FXD,FILM:75 OHM,5%,0.2W	57668	TR20JE 75E
A10R820	322-3402-00			RES,FXD,FILM:150K OHM,1%,0.2W,TC=T0	57668	CRB20 FXE 150K
A10R821	322-3402-00			RES,FXD,FILM:150K OHM,1%,0.2W,TC=T0	57668	CRB20 FXE 150K
A10R822	322-3265-00			RES,FXD,FILM:5.62K OHM,1%,0.2W,TC=T0	80009	322-3265-00
A10R823	311-2230-00			RES,VAR,NONWW:TRMR,500 OHM,20%,0.50 LINEAR	TK1450	GF06UT 500
A10R825	311-2234-00			RES,VAR,NONWW:TRMR,5K OHM,20%,0.5W LINEAR	TK1450	GF06UT 5K
A10R826	311-2234-00			RES,VAR,NONWW:TRMR,5K OHM,20%,0.5W LINEAR	TK1450	GF06UT 5K
A10R827	311-2229-00			RES,VAR,NONWW:TRMR,250 OHM,20%,0.5W LINEAR	TK1450	GF06UT 250
A10R828	301-0203-00			RES,FXD,FILM:20K OHM,5%,0.5W	19701	5053CX20K00J
A10R829	301-0203-00			RES,FXD,FILM:20K OHM,5%,0.5W	19701	5053CX20K00J
A10R836	322-3152-00			RES,FXD,FILM:374 OHM,1%,0.2W,TC=T0	57668	CRB20 FXE 374E
A10R837	313-1100-00			RES,FXD,FILM:10 OHM,5%,0.2W	57668	TR20JE10E0
A10R840	313-1470-00			RES,FXD,FILM:47 OHM,5%,0.2W	57668	TR20JE 47E
A10R841	313-1100-00			RES,FXD,FILM:10 OHM,5%,0.2W	57668	TR20JE10E0
A10R842	313-1103-00			RES,FXD,FILM:10K OHM,5%,0.2W	57668	TR20JE10K0
A10R843	301-0751-00			RES,FXD,FILM:750 OHM,5%,0.5W	19701	5053CX750R0J
A10R844	301-0751-00			RES,FXD,FILM:750 OHM,5%,0.5W	19701	5053CX750R0J
A10R845	313-1100-00			RES,FXD,FILM:10 OHM,5%,0.2W	57668	TR20JE10E0
A10R846	322-3058-00			RES,FXD,FILM:39.2 OHM,1%,0.2W,TC=T0	57668	CRB20 FXE 39E2
A10R847	313-1100-00			RES,FXD,FILM:10 OHM,5%,0.2W	57668	TR20JE10E0
A10R848	301-0222-00			RES,FXD,FILM:2.2K OHM,5%,0.5W	19701	5053CX2K200J
A10R849	301-0222-00			RES,FXD,FILM:2.2K OHM,5%,0.5W	19701	5053CX2K200J
A10R850	313-1432-00			RES,FXD,FILM:4.3K OHM,5%,0.2W	57668	TR20JE 04K3
A10R851	313-1100-00			RES,FXD,FILM:10 OHM,5%,0.2W	57668	TR20JE10E0
A10R852	322-3073-00			RES,FXD,FILM:56.2 OHM,1%,0.2W,TC=T0	80009	322-3073-00
A10R853	313-1470-00			RES,FXD,FILM:47 OHM,5%,0.2W	57668	TR20JE 47E
A10R854	313-1201-00			RES,FXD,FILM:200 OHM,5%,0.2W	57668	TR20JE200E
A10R855	313-1201-00			RES,FXD,FILM:200 OHM,5%,0.2W	57668	TR20JE200E
A10R856	322-3288-00			RES,FXD,FILM:9.76K OHM,1%,0.2W,TC=T0	80009	322-3288-00
A10R857	322-3264-00			RES,FXD,FILM:5.49K OHM,1%,0.2W,TC=T0	57668	CRB20 FXE 5K49
A10R858	322-3143-00			RES,FXD,FILM:301 OHM,1%,0.2W,TC=T0	57668	CRB20 FXE 301E
A10R906	313-1120-00			RES,FXD,FILM:12 OHM,5%,0.2W	57668	TR20JE12E0

http://www.manuals.com

Component No.	Tektronix Part No.	Serial/Assembly No. Effective	Dscont	Name & Description	Mfr. Code	Mfr. Part No.
A10R907	313-1120-00			RES,FXD,FILM:12 OHM,5%,0.2W	57668	TR20JE12E0
A10R908	313-1120-00			RES,FXD,FILM:12 OHM,5%,0.2W	57668	TR20JE12E0
A10R909	313-1101-00			RES,FXD,FILM:100 OHM,5%,0.2W	57668	TR20JE100E
A10R910	313-1101-00			RES,FXD,FILM:100 OHM,5%,0.2W	57668	TR20JE100E
A10R911	311-1239-00			RES,VAR,NONWW:TRMR,2.5K OHM,0.5W	32997	3386X-T07-252
A10R915	322-3289-00			RES,FXD,FILM:10K OHM,1%,0.2W,TC=T0	57668	CRB20 FXE 10K0
A10R916	322-3289-00			RES,FXD,FILM:10K OHM,1%,0.2W,TC=T0	57668	CRB20 FXE 10K0
A10R920	311-2228-00			RES,VAR,NONWW:TRMR,200 OHM,20%,0.5W LINEAR	TK1450	GF06UT B200 OHM
A10R921	307-2131-00			RES NTWK,FXD,FI:PRECESION VOLTAGE DIVIDER	80009	307-2131-00
A10R922	313-1103-00			RES,FXD,FILM:10K OHM,5%,0.2W	57668	TR20JE10K0
A10R923	313-1103-00			RES,FXD,FILM:10K OHM,5%,0.2W	57668	TR20JE10K0
A10R924	313-1103-00			RES,FXD,FILM:10K OHM,5%,0.2W	57668	TR20JE10K0
A10R930	313-1751-00			RES,FXD,FILM:750 OHM,5%,0.2W	57668	TR20JE 750E
A10R931	322-3193-02			RES,FXD,FILM:1K OHM,0.5%,0.2W,TC=T2	57668	CRB20 DYE 1K00
A10R932	322-3239-03			RES,FXD,FILM:3.01K OHM,0.25%,0.2W,TC=T2	57668	CRB20 CYE 3K01
A10R933	313-1272-00			RES,FXD,FILM:2.7K OHM,5%,0.2W	57668	TR20JE 02K7
A10R934	313-1122-00			RES,FXD,FILM:1.2K OHM,5%,0.2W	57668	TR20JE01K2
A10R935	313-1223-00			RES,FXD,FILM:22K,OHM,5%,0.2W	57668	TR20JE 22K
A10R936	322-3489-02			RES,FXD,FILM:3.52K OHM,0.2W,5%	57668	CRB20 DYE 3K52
A10R937	322-3126-02			RES,FXD,FILM:200 OHM,0.5%,0.2W,TC=T2	80009	322-3126-02
A10R938	313-1752-00			RES,FXD,FILM:7.5K OHM,5%,0.2W	57668	TR20JE 07K5
A10R939	313-1152-00			RES,FXD,FILM:1.5K OHM,5%,0.2W	57668	TR20JE01K5
A10R940	313-1122-00			RES,FXD,FILM:1.2K OHM,5%,0.2W	57668	TR20JE01K2
A10R1001	322-3232-00			RES,FXD,FILM:2.55K OHM,1%,0.2W,TC=T0	80009	322-3232-00
A10R1002	322-3232-00			RES,FXD,FILM:2.55K OHM,1%,0.2W,TC=T0	80009	322-3232-00
A10R1003	313-1512-00			RES,FXD,FILM:5.1K OHM,5%,0.2W	57668	TR20JE 5K1
A10R1004	322-3232-00			RES,FXD,FILM:2.55K OHM,1%,0.2W,TC=T0	80009	322-3232-00
A10R1005	322-3251-00			RES,FXD,FILM:4.02K OHM,1%,0.2W,TC=T0	57668	CRB20 FXE 4K02
A10R1006	322-3184-00			RES,FXD,FILM:806 OHM,1%,0.2W,TC=T0	57668	CRB20 FXE 806E
A10R1007	322-3251-00			RES,FXD,FILM:4.02K OHM,1%,0.2W,TC=T0	57668	CRB20 FXE 4K02
A10R1008	322-3184-00			RES,FXD,FILM:806 OHM,1%,0.2W,TC=T0	57668	CRB20 FXE 806E
A10R1009	313-1103-00			RES,FXD,FILM:10K OHM,5%,0.2W	57668	TR20JE10K0
A10R1010	313-1103-00			RES,FXD,FILM:10K OHM,5%,0.2W	57668	TR20JE10K0
A10R1020	313-1272-00			RES,FXD,FILM:2.7K OHM,5%,0.2W	57668	TR20JE 02K7
A10R1021	313-1512-00			RES,FXD,FILM:5.1K OHM,5%,0.2W	57668	TR20JE 5K1
A10R1022	313-1272-00			RES,FXD,FILM:2.7K OHM,5%,0.2W	57668	TR20JE 02K7
A10R1023	313-1512-00			RES,FXD,FILM:5.1K OHM,5%,0.2W	57668	TR20JE 5K1
A10R1024	313-1272-00			RES,FXD,FILM:2.7K OHM,5%,0.2W	57668	TR20JE 02K7
A10R1025	313-1512-00			RES,FXD,FILM:5.1K OHM,5%,0.2W	57668	TR20JE 5K1
A10R1026	313-1100-00			RES,FXD,FILM:10 OHM,5%,0.2W	57668	TR20JE10E0
A10R1027	313-1100-00			RES,FXD,FILM:10 OHM,5%,0.2W	57668	TR20JE10E0
A10R1028	313-1102-00			RES,FXD,FILM:1K OHM,5%,0.2W	57668	TR20JE01K0
A10R1101	313-1100-00			RES,FXD,FILM:10 OHM,5%,0.2W	57668	TR20JE10E0
A10R1102	313-1100-00			RES,FXD,FILM:10 OHM,5%,0.2W	57668	TR20JE10E0
A10R1103	313-1102-00			RES,FXD,FILM:1K OHM,5%,0.2W	57668	TR20JE01K0
A10R1104	313-1682-00			RES,FXD,FILM:6.8K OHM,5%,0.2W	57668	TR20JE 06K8
A10R1110	313-1682-00			RES,FXD,FILM:6.8K OHM,5%,0.2W	57668	TR20JE 06K8
A10R1111	313-1303-00			RES,FXD,FILM:30K OHM,5%,0.2W	57668	TR20JE 30K
A10R1112	313-1302-00			RES,FXD,FILM:3K OHM,5%,0.2W	57668	TR20JE 03K0
A10R1113	313-1101-00			RES,FXD,FILM:100 OHM,5%,0.2W	57668	TR20JE100E
A10R1114	313-1103-00			RES,FXD,FILM:10K OHM,5%,0.2W	57668	TR20JE10K0
A10R1115	313-1682-00			RES,FXD,FILM:6.8K OHM,5%,0.2W	57668	TR20JE 06K8
A10R1116	313-1102-00			RES,FXD,FILM:1K OHM,5%,0.2W	57668	TR20JE01K0
A10R1117	313-1162-00			RES,FXD,FILM:1.6K OHM,5%,0.2W	57668	TR20JT681K6
A10R1118	313-1751-00			RES,FXD,FILM:750 OHM,5%,0.2W	57668	TR20JE 750E
A10R1120	313-1682-00			RES,FXD,FILM:6.8K OHM,5%,0.2W	57668	TR20JE 06K8
A10R1121	313-1303-00			RES,FXD,FILM:30K OHM,5%,0.2W	57668	TR20JE 30K
A10R1122	313-1302-00			RES,FXD,FILM:3K OHM,5%,0.2W	57668	TR20JE 03K0

http://www.manuals.com

Component No.	Tektronix Part No.	Serial/Assembly No. Effective	Dscont	Name & Description	Mfr. Code	Mfr. Part No.
A10R1123	313-1101-00			RES,FXD,FILM:100 OHM,5%,0.2W	57668	TR20JE100E
A10R1124	313-1103-00			RES,FXD,FILM:10K OHM,5%,0.2W	57668	TR20JE10K0
A10R1125	313-1682-00			RES,FXD,FILM:6.8K OHM,5%,0.2W	57668	TR20JE 06K8
A10R1126	313-1102-00			RES,FXD,FILM:1K OHM,5%,0.2W	57668	TR20JE01K0
A10R1127	313-1162-00			RES,FXD,FILM:1.6K OHM,5%,0.2W	57668	TR20JT681K6
A10R1128	313-1751-00			RES,FXD,FILM:750 OHM,5%,0.2W	57668	TR20JE 750E
A10R1131	313-1472-00			RES,FXD,FILM:4.7K OHM,5%,0.2W	57668	TR20JE 04K7
A10R1132	313-1183-00			RES,FXD,FILM:18K OHM,5%,0.2W	57668	TR20JT68 18K
A10R1133	313-1124-00			RES,FXD,FILM:120K OHM,5%,0.2W	57668	TR20JE120K
A10R1134	313-1472-00			RES,FXD,FILM:4.7K OHM,5%,0.2W	57668	TR20JE 04K7
A10R1135	313-1204-00			RES,FXD,FILM:200K,5%,0.2W	57668	TR20JE 200K
A10R1136	313-1204-00			RES,FXD,FILM:200K,5%,0.2W	57668	TR20JE 200K
A10R1142	313-1203-00			RES,FXD,FILM:20K OHM,5%,0.2W	57668	TR20JE20K
A10R1143	313-1102-00			RES,FXD,FILM:1K OHM,5%,0.2W	57668	TR20JE01K0
A10R1144	313-1683-00			RES,FXD,FILM:68K OHM,5%,0.2W	57668	TR20JE 68K
A10R1145	313-1102-00			RES,FXD,FILM:1K OHM,5%,0.2W	57668	TR20JE01K0
A10R1150	313-1102-00			RES,FXD,FILM:1K OHM,5%,0.2W	57668	TR20JE01K0
A10R1154	315-0205-00			RES,FXD,FILM:2M OHM,5%,0.25W	01121	CB2055
A10R1155	315-0205-00			RES,FXD,FILM:2M OHM,5%,0.25W	01121	CB2055
A10R1158	313-1100-00			RES,FXD,FILM:10 OHM,5%,0.2W	57668	TR20JE10E0
A10R1159	313-1100-00			RES,FXD,FILM:10 OHM,5%,0.2W	57668	TR20JE10E0
A10R1162	313-1302-00			RES,FXD,FILM:3K OHM,5%,0.2W	57668	TR20JE 03K0
A10R1163	313-1152-00			RES,FXD,FILM:1.5K OHM,5%,0.2W	57668	TR20JE01K5
A10R1170	313-1152-00			RES,FXD,FILM:1.5K OHM,5%,0.2W	57668	TR20JE01K5
A10R2701	322-3112-00			RES,FXD,FILM:143 OHM,1%,0.2W,TC=T0	80009	322-3112-00
A10R2702	313-1393-00			RES,FXD,FILM:39K OHM,5%,0.2W	57668	TR20JE 39K
A10R2703	322-3282-00			RES,FXD,FILM:8.45K OHM,1%,0.2W,TC=T0	80009	322-3282-00
A10R2704	322-3164-00			RES,FXD,FILM:499 OHM,1%,0.2W,TC=T0	57668	CRB20 FXE 499E
A10R2705	313-1102-00			RES,FXD,FILM:1K OHM,5%,0.2W	57668	TR20JE01K0
A10R2706	313-1103-00			RES,FXD,FILM:10K OHM,5%,0.2W	57668	TR20JE10K0
A10R2708	322-3289-00			RES,FXD,FILM:10K OHM,1%,0.2W,TC=T0	57668	CRB20 FXE 10K0
A10R2709	322-3289-00			RES,FXD,FILM:10K OHM,1%,0.2W,TC=T0	57668	CRB20 FXE 10K0
A10R2710	313-1361-00			RES,FXD,FILM:360 OHM,5%,0.2W	57668	TR20JE 360E
A10R2711	313-1333-00			RES,FXD,FILM:33K OHM,5%,0.2W	57668	TR20JE 33K
A10R2712	313-1333-00			RES,FXD,FILM:33K OHM,5%,0.2W	57668	TR20JE 33K
A10R2713	313-1333-00			RES,FXD,FILM:33K OHM,5%,0.2W	57668	TR20JE 33K
A10R2714	313-1333-00			RES,FXD,FILM:33K OHM,5%,0.2W	57668	TR20JE 33K
A10R2715	313-1104-00			RES,FXD,FILM:100K OHM,5%,0.2W	57668	TR20JE100K
A10R2716	313-1333-00			RES,FXD,FILM:33K OHM,5%,0.2W	57668	TR20JE 33K
A10R2717	313-1562-00			RES,FXD,FILM:5.6K OHM,5%,0.2W	57668	TR20JE 05K6
A10R2718	315-0750-00			RES,FXD,FILM:75 OHM,5%,0.25W	57668	NTR25J-E75E0
A10R2719	311-2236-00			RES,VAR,NONWW:TRMR,20K OHM,20%,0.5W LINEAR	TK1450	GF06UT 20K
A10R2720	315-0203-00			RES,FXD,FILM:20K OHM,5%,0.25W	57668	NTR25J-E 20K
A10R2721	315-0472-00			RES,FXD,FILM:4.7K OHM,5%,0.25W	57668	NTR25J-E04K7
A10R2722	315-0244-00			RES,FXD,FILM:240K OHM,5%,0.25W	19701	5043CX240K0J
A10R2723	315-0511-00			RES,FXD,FILM:510 OHM,5%,0.25W	19701	5043CX510R0J
A10R2724	315-0625-00			RES,FXD,FILM:6.2M OHM,5%,0.25W	01121	CB6255
A10R2726	313-1101-00			RES,FXD,FILM:100 OHM,5%,0.2W	57668	TR20JE100E
A10R2727	322-3213-00			RES,FXD,FILM:1.62K OHM,1%,0.2W,TC=T0	57668	CRB20 FXE 1K62
A10R2728	313-1200-00			RES,FXD,FILM:20 OHM,5%,0.2W	57668	TR20JE20E
A10R2729	322-3210-00			RES,FXD,FILM:1.5K OHM,1%,0.2W,TC=T0	57668	CRB20 FXE 1K50
A10R2733	313-1102-00			RES,FXD,FILM:1K OHM,5%,0.2W	57668	TR20JE01K0
A10R2734	313-1101-00			RES,FXD,FILM:100 OHM,5%,0.2W	57668	TR20JE100E
A10R2735	315-0122-00			RES,FXD,FILM:1.2K OHM,5%,0.25W	57668	NTR25J-E01K2
A10R2736	301-0203-00			RES,FXD,FILM:20K OHM,5%,0.5W	19701	5053CX20K00J
A10R2737	313-1104-00			RES,FXD,FILM:100K OHM,5%,0.2W	57668	TR20JE100K
A10R2738	313-1333-00			RES,FXD,FILM:33K OHM,5%,0.2W	57668	TR20JE 33K
A10R2739	313-1752-00			RES,FXD,FILM:7.5K OHM,5%,0.2W	57668	TR20JE 07K5

http://www.manuals.com

Component No.	Tektronix Part No.	Serial/Assembly No. Effective	Dscont	Name & Description	Mfr. Code	Mfr. Part No.
A10R2740	315-0750-00			RES,FXD,FILM:75 OHM,5%,0.25W	57668	NTR25J-E75E0
A10R2741	315-0472-00			RES,FXD,FILM:4.7K OHM,5%,0.25W	57668	NTR25J-E04K7
A10R2742	315-0244-00			RES,FXD,FILM:240K OHM,5%,0.25W	19701	5043CX240K0J
A10R2743	315-0122-00			RES,FXD,FILM:1.2K OHM,5%,0.25W	57668	NTR25J-E01K2
A10R2745	315-0102-00			RES,FXD,FILM:1K OHM,5%,0.25W	57668	NTR25JE01K0
A10R2750	315-0511-00			RES,FXD,FILM:510 OHM,5%,0.25W	19701	5043CX510R0J
A10R2751	315-0625-00			RES,FXD,FILM:6.2M OHM,5%,0.25W	01121	CB6255
A10R2758	311-1933-00			RES,VAR,NONWW:PNL,5M OHM,10%,0.5W	01121	23M909
A10R2760	307-2173-00			RES NTWK,FXD,FI:HIGH VOLTAGE,FINISHED	80009	307-2173-00
A10R2765	322-3188-00			RES,FXD,FILM:887 OHM,1%,0.2W,TC=T0	57668	CRB20 FXE 887E
A10R2783	313-1101-00			RES,FXD,FILM:100 OHM,5%,0.2W	57668	TR20JE100E
A10R2784	311-2239-00			RES,VAR,NONWW:TRMR,100K OHM,20%,0.5W LINEAR	TK1450	GF06UT 100K
A10R2785	313-1102-00			RES,FXD,FILM:1K OHM,5%,0.2W	57668	TR20JE01K0
A10R2786	313-1823-00			RES,FXD,FILM:82K OHM,5%,0.2W	57668	TR20JE 82K
A10R2787	313-1363-00			RES,FXD,FILM:36K OHM,5%,0.2W	57668	TR20JE 36K
A10R2788	311-2239-00			RES,VAR,NONWW:TRMR,100K OHM,20%,0.5W LINEAR	TK1450	GF06UT 100K
A10R2789	313-1102-00			RES,FXD,FILM:1K OHM,5%,0.2W	57668	TR20JE01K0
A10R2795	322-3268-00			RES,FXD,FILM:6.04K OHM,1%,0.2W,TC=T0	57668	CRB20 FXE 6K04
A10R2796	313-1100-00			RES,FXD,FILM:10 OHM,5%,0.2W	57668	TR20JE10E0
A10U112	165-2232-00			MICROCKT,LINEAR:BUFFER AMPLIFIER	80009	165-2232-00
A10U122	165-2232-00			MICROCKT,LINEAR:BUFFER AMPLIFIER	80009	165-2232-00
A10U171	156-0796-00			MICROCKT,DGTL:8 STG SHF & STORE BUS RGTR	02735	CD4094BF
A10U172	156-0796-00			MICROCKT,DGTL:8 STG SHF & STORE BUS RGTR	02735	CD4094BF
A10U173	156-0796-00			MICROCKT,DGTL:8 STG SHF & STORE BUS RGTR	02735	CD4094BF
A10U174	156-1190-00			MICROCKT,LINEAR:7 XSTR	02735	CA3082-98
A10U175	156-1190-00			MICROCKT,LINEAR:7 XSTR	02735	CA3082-98
A10U201	156-2571-00			MICROCKT,DGTL:HCMOS,ANALOG MUX,TRIPLE	80009	156-2571-00
A10U202	156-2571-00			MICROCKT,DGTL:HCMOS,ANALOG MUX,TRIPLE	80009	156-2571-00
A10U203	156-2667-00			MICROCKT,LINEAR:QUAD LOW PWR,OPERATIONAL AMPLIFIERS MC3403,14 DIP,MI	80009	156-2667-00
A10U210	234-0238-20			QUICK CHIP:VERTICAL PREAMP,PACKAGE IC	80009	234-0238-20
A10U220	234-0238-20			QUICK CHIP:VERTICAL PREAMP,PACKAGE IC	80009	234-0238-20
A10U230	234-0238-20			QUICK CHIP:VERTICAL PREAMP,PACKAGE IC	80009	234-0238-20
A10U240	234-0238-20			QUICK CHIP:VERTICAL PREAMP,PACKAGE IC	80009	234-0238-20
A10U260	156-0067-01			MICROCKT,LINEAR:OPNL AMPL,CHECKED	04713	MC1741CP1DS
A10U280	156-1349-00			MICROCKT,LINEAR:DUAL INDEP DIFF AMPL	02735	CA3054-98
A10U301	156-2571-00			MICROCKT,DGTL:HCMOS,ANALOG MUX,TRIPLE	80009	156-2571-00
A10U302	156-0796-00			MICROCKT,DGTL:8 STG SHF & STORE BUS RGTR	02735	CD4094BF
A10U303	156-0796-00			MICROCKT,DGTL:8 STG SHF & STORE BUS RGTR	02735	CD4094BF
A10U304	156-2873-00			MICROCKT,LINEAR:DUAL BIFET,OPNL AMPL	80009	156-2873-00
A10U307	156-0514-00			MICROCKT,DGTL:CMOS,DIFF 4-CHANNEL MUX	02735	CD4052BF-98
A10U308	156-0514-00			MICROCKT,DGTL:CMOS,DIFF 4-CHANNEL MUX	02735	CD4052BF-98
A10U309	156-0158-07			MICROCKT,LINEAR:DUAL OPNL AMPL,SCREENED	01295	MC1458JG4
A10U310	156-0514-00			MICROCKT,DGTL:CMOS,DIFF 4-CHANNEL MUX	02735	CD4052BF-98
A10U311	156-0514-00			MICROCKT,DGTL:CMOS,DIFF 4-CHANNEL MUX	02735	CD4052BF-98
A10U313	156-1349-00			MICROCKT,LINEAR:DUAL INDEP DIFF AMPL	02735	CA3054-98
A10U315	156-1640-00			MICROCKT,DGTL:ECL,TPL LINE RCVR	04713	MC10H116(L OR P)
A10U316	156-0308-00			MICROCKT,DGTL:ECL,QUAD DIFF LINE RCVR	04713	MC10115L OR P
A10U421	234-0239-20			QUICK CHIP:TRIGGER,IC PACKAGE	80009	234-0239-20
A10U431	234-0239-20			QUICK CHIP:TRIGGER,IC PACKAGE	80009	234-0239-20
A10U441	156-2027-00			MICROCKT,DGTL:CMOS,HEX INVERTER	27014	MM74HC04N
A10U501	156-0469-00			MICROCKT,DGTL:3-LINE TO 8-LINE DECODER	01295	SN74LS138N
A10U502	156-0768-01			MICROCKT,DGTL:BIDIRECT UNIV SR,SCREENED	01295	SN74LS194ANP3
A10U503	156-0804-00			MICROCKT,DGTL:QUADRUPLE S-R LATCH	04713	74LS279(N OR J)
A10U506	156-0513-00			MICROCKT,DGTL:CMOS,8-CHANNEL MUX	04713	MC14051BCL
A10U600	156-2655-00			MICROCKT,DGTL:SEMI CUST,STD CELL,SLOW LGC	80009	156-2655-00
A10U601	156-1126-00			MICROCKT,LINEAR:VOLTAGE COMPARATOR	01295	LM311P
A10U602	156-2654-00			MICROCKT,DGTL:ECL,SEMI CUSTOM,FAST LOGIC	80009	156-2654-00

http://www.tekscope.com

Component No.	Tektronix Part No.	Serial/Assembly No. Effective	Dscont	Name & Description	Mfr. Code	Mfr. Part No.
A10U603	156-0631-00			MICROCKT,DGTL:ECL,QUAD 2 INPUT OR/NOR GATE	04713	MC10101(L OR P)
A10U604	156-0860-00			MICROCKT,DGTL:ECL,TRIPLE LINE RECEIVER	04713	MC10116L
A10U606	156-0140-00			MICROCKT,DGTL:TTL,HEX BUFFER/DRIVER	01295	SN7417N
A10U701	155-0322-00			MICROCKT,LINEAR:VERTICAL OUTPUT AMPLIFIER	80009	155-0322-00
A10U702	156-1126-00			MICROCKT,LINEAR:VOLTAGE COMPARATOR	01295	LM311P
A10U801	156-0158-07			MICROCKT,LINEAR:DUAL OPNL AMPL,SCREENED	01295	MC1458JG4
A10U802	234-0401-21			QUICK CHIP:GPS HORIZ PREAMP	80009	234-0401-21
A10U901	156-2702-00			MICROCKT,LINEAR:DUAL OP AMP,HIGH OUT CRNT	80009	156-2702-00
A10U930	156-0158-07			MICROCKT,LINEAR:DUAL OPNL AMPL,SCREENED	01295	MC1458JG4
A10U931	156-2605-00			MICROCKT,DGTL:HCMOS,ANALOG MUX,8 CHANNEL	80009	156-2605-00
A10U932	156-1173-00			MICROCKT,LINEAR:VOLTAGE REFERENCE	04713	MC1403UDS
A10U1001	156-0495-00			MICROCKT,LINEAR:OPNL AMPL	01295	LM324N
A10U1101	156-2873-00			MICROCKT,LINEAR:DUAL BIFET,OPNL AMPL	80009	156-2873-00
A10U1102	156-1225-00			MICROCKT,LINEAR:DUAL COMPARATOR	01295	LM393P
A10U1103	156-0796-00			MICROCKT,DGTL:8 STG SHF & STORE BUS RGTR	02735	CD4094BF
A10U1104	156-0515-00			MICROCKT,DGTL:CMOS,TRIPLE 2-CHAN MUX	02735	CD4053BF
A10U1106	156-0515-00			MICROCKT,DGTL:CMOS,TRIPLE 2-CHAN MUX	02735	CD4053BF
A10VR301	152-0437-00			SEMICOND DVC,DI:ZEN,SI,8.2V,2%,0.4W,DO-7	04713	SZG14RL
A10VR302	152-0437-00			SEMICOND DVC,DI:ZEN,SI,8.2V,2%,0.4W,DO-7	04713	SZG14RL
A10VR303	152-0437-00			SEMICOND DVC,DI:ZEN,SI,8.2V,2%,0.4W,DO-7	04713	SZG14RL
A10VR304	152-0437-00			SEMICOND DVC,DI:ZEN,SI,8.2V,2%,0.4W,DO-7	04713	SZG14RL
A10VR308	152-0127-00			SEMICOND DVC,DI:ZEN,SI,7.5V,5%,0.4W,DO-7	14433	Z5347 (1N958B)
A10VR309	152-0166-00			SEMICOND DVC,DI:ZEN,SI,6.2V,5%,400MW,DO-7	04713	SZ11738RL
A10VR310	152-0166-00			SEMICOND DVC,DI:ZEN,SI,6.2V,5%,400MW,DO-7	04713	SZ11738RL
A10VR311	152-0168-00			SEMICOND DVC,DI:ZEN,SI,12V,5%,0.4W,DO-763B	14552	TD331689
A10VR312	152-0168-00			SEMICOND DVC,DI:ZEN,SI,12V,5%,0.4W,DO-763B	14552	TD331689
A10VR801	152-0243-00			SEMICOND DVC,DI:ZEN,SI,15V,5%,0.4W,DO-7	04713	SZ13203 (1N965B)
A10VR802	152-0265-00			SEMICOND DVC,DI:ZEN,SI,24V,5%,0.4W	14552	TD3810986
A10VR2701	152-0306-00			SEMICOND DVC,DI:ZEN,SI,9.1V,5%,0.4W,DO-7	12954	1N960B
A10W3	175-9903-00			CA ASSY,SP,ELEC:25,27 AWG,6.4 L	80009	175-9903-00
A10W9	198-5523-00			WIRE SET,ELEC:SOCKET ASSY CRT	80009	198-5523-00
A10W17	196-3069-00			LEAD,ELECTRICAL:22 AWG,5.0 L,9-N	80009	196-3069-00
A10W18	196-3069-00			LEAD,ELECTRICAL:22 AWG,5.0 L,9-N	80009	196-3069-00
A10W19	196-3069-00			LEAD,ELECTRICAL:22 AWG,5.0 L,9-N	80009	196-3069-00
A10W20	196-3069-00			LEAD,ELECTRICAL:22 AWG,5.0 L,9-N	80009	196-3069-00
A10W100	131-0566-00			BUS,CONDUCTOR:DUMMY RES,0.094 OD X 0.225 L	24546	OMA 07
A10W101	131-0566-00			BUS,CONDUCTOR:DUMMY RES,0.094 OD X 0.225 L	24546	OMA 07
A10W102	131-0566-00			BUS,CONDUCTOR:DUMMY RES,0.094 OD X 0.225 L	24546	OMA 07
A10W103	131-0566-00			BUS,CONDUCTOR:DUMMY RES,0.094 OD X 0.225 L	24546	OMA 07
A10W200	131-0566-00			BUS,CONDUCTOR:DUMMY RES,0.094 OD X 0.225 L	24546	OMA 07
A10W201	131-0566-00			BUS,CONDUCTOR:DUMMY RES,0.094 OD X 0.225 L	24546	OMA 07
A10W202	131-0566-00			BUS,CONDUCTOR:DUMMY RES,0.094 OD X 0.225 L	24546	OMA 07
A10W203	131-0566-00			BUS,CONDUCTOR:DUMMY RES,0.094 OD X 0.225 L	24546	OMA 07
A10W205	131-0566-00			BUS,CONDUCTOR:DUMMY RES,0.094 OD X 0.225 L	24546	OMA 07
A10W206	131-0566-00			BUS,CONDUCTOR:DUMMY RES,0.094 OD X 0.225 L	24546	OMA 07
A10W207	131-0566-00			BUS,CONDUCTOR:DUMMY RES,0.094 OD X 0.225 L	24546	OMA 07
A10W208	131-0566-00			BUS,CONDUCTOR:DUMMY RES,0.094 OD X 0.225 L	24546	OMA 07
A10W209	131-0566-00			BUS,CONDUCTOR:DUMMY RES,0.094 OD X 0.225 L	24546	OMA 07
A10W210	131-0566-00			BUS,CONDUCTOR:DUMMY RES,0.094 OD X 0.225 L	24546	OMA 07
A10W223	131-0566-00			BUS,CONDUCTOR:DUMMY RES,0.094 OD X 0.225 L	24546	OMA 07
A10W231	131-0566-00			BUS,CONDUCTOR:DUMMY RES,0.094 OD X 0.225 L	24546	OMA 07
A10W232	131-0566-00			BUS,CONDUCTOR:DUMMY RES,0.094 OD X 0.225 L	24546	OMA 07
A10W235	131-0566-00			BUS,CONDUCTOR:DUMMY RES,0.094 OD X 0.225 L	24546	OMA 07
A10W304	131-0566-00			BUS,CONDUCTOR:DUMMY RES,0.094 OD X 0.225 L	24546	OMA 07
A10W305	131-0566-00			BUS,CONDUCTOR:DUMMY RES,0.094 OD X 0.225 L	24546	OMA 07
A10W401	131-0566-00			BUS,CONDUCTOR:DUMMY RES,0.094 OD X 0.225 L	24546	OMA 07
A10W403	131-0566-00			BUS,CONDUCTOR:DUMMY RES,0.094 OD X 0.225 L	24546	OMA 07

http://www.manuals.hk

Component No.	Tektronix Part No.	Serial/Assembly No. Effective	Dscont	Name & Description	Mfr. Code	Mfr. Part No.
A10W404	131-0566-00			BUS,CONDUCTOR:DUMMY RES,0.094 OD X 0.225 L	24546	OMA 07
A10W405	131-0566-00			BUS,CONDUCTOR:DUMMY RES,0.094 OD X 0.225 L	24546	OMA 07
A10W406	131-0566-00			BUS,CONDUCTOR:DUMMY RES,0.094 OD X 0.225 L	24546	OMA 07
A10W407	131-0566-00			BUS,CONDUCTOR:DUMMY RES,0.094 OD X 0.225 L	24546	OMA 07
A10W408	131-0566-00			BUS,CONDUCTOR:DUMMY RES,0.094 OD X 0.225 L	24546	OMA 07
A10W410	131-0566-00			BUS,CONDUCTOR:DUMMY RES,0.094 OD X 0.225 L	24546	OMA 07
A10W411	131-0566-00			BUS,CONDUCTOR:DUMMY RES,0.094 OD X 0.225 L	24546	OMA 07
A10W412	131-0566-00			BUS,CONDUCTOR:DUMMY RES,0.094 OD X 0.225 L	24546	OMA 07
A10W413	131-0566-00			BUS,CONDUCTOR:DUMMY RES,0.094 OD X 0.225 L	24546	OMA 07
A10W414	131-0566-00			BUS,CONDUCTOR:DUMMY RES,0.094 OD X 0.225 L	24546	OMA 07
A10W415	174-0733-00			CA ASSY,SP,ELEC:4,26 AWG,4.5 L,RIBBON	80009	174-0733-00
A10W416	174-0732-00			CA ASSY,SP,ELEC:4,26 AWG,3.0 L,RIBBON	80009	174-0732-00
A10W505	131-0566-00			BUS,CONDUCTOR:DUMMY RES,0.094 OD X 0.225 L	24546	OMA 07
A10W510	131-0566-00			BUS,CONDUCTOR:DUMMY RES,0.094 OD X 0.225 L	24546	OMA 07
A10W511	174-1041-00			CA ASSY,SP,ELEC:18 COND,8.5 L,RIBBON	80009	174-1041-00
A10W512	174-1039-00			CA ASSY,SP,ELEC:12 COND,11.3 L,RIBBON	80009	174-1039-00
A10W603	131-0566-00			BUS,CONDUCTOR:DUMMY RES,0.094 OD X 0.225 L	24546	OMA 07
A10W604	131-0566-00			BUS,CONDUCTOR:DUMMY RES,0.094 OD X 0.225 L	24546	OMA 07
A10W605	131-0566-00			BUS,CONDUCTOR:DUMMY RES,0.094 OD X 0.225 L	24546	OMA 07
A10W610	131-0566-00			BUS,CONDUCTOR:DUMMY RES,0.094 OD X 0.225 L	24546	OMA 07
A10W611	131-0566-00			BUS,CONDUCTOR:DUMMY RES,0.094 OD X 0.225 L	24546	OMA 07
A10W612	131-0566-00			BUS,CONDUCTOR:DUMMY RES,0.094 OD X 0.225 L	24546	OMA 07
A10W802	131-0566-00			BUS,CONDUCTOR:DUMMY RES,0.094 OD X 0.225 L	24546	OMA 07
A10W805	131-0566-00			BUS,CONDUCTOR:DUMMY RES,0.094 OD X 0.225 L	24546	OMA 07
A10W806	131-0566-00			BUS,CONDUCTOR:DUMMY RES,0.094 OD X 0.225 L	24546	OMA 07
A10W807	131-0566-00			BUS,CONDUCTOR:DUMMY RES,0.094 OD X 0.225 L	24546	OMA 07
A10W808	131-0566-00			BUS,CONDUCTOR:DUMMY RES,0.094 OD X 0.225 L	24546	OMA 07
A10W810	131-0566-00			BUS,CONDUCTOR:DUMMY RES,0.094 OD X 0.225 L	24546	OMA 07
A10W811	131-0566-00			BUS,CONDUCTOR:DUMMY RES,0.094 OD X 0.225 L	24546	OMA 07
A10W815	131-0566-00			BUS,CONDUCTOR:DUMMY RES,0.094 OD X 0.225 L	24546	OMA 07
A10W906	131-0566-00			BUS,CONDUCTOR:DUMMY RES,0.094 OD X 0.225 L	24546	OMA 07
A10W1000	131-0566-00			BUS,CONDUCTOR:DUMMY RES,0.094 OD X 0.225 L	24546	OMA 07
A10W1010	131-0566-00			BUS,CONDUCTOR:DUMMY RES,0.094 OD X 0.225 L	24546	OMA 07
A10W1101	131-0566-00			BUS,CONDUCTOR:DUMMY RES,0.094 OD X 0.225 L	24546	OMA 07
A10W1102	131-0566-00			BUS,CONDUCTOR:DUMMY RES,0.094 OD X 0.225 L	24546	OMA 07
A10W1103	131-0566-00			BUS,CONDUCTOR:DUMMY RES,0.094 OD X 0.225 L	24546	OMA 07
A10W1104	131-0566-00			BUS,CONDUCTOR:DUMMY RES,0.094 OD X 0.225 L	24546	OMA 07
A10W1105	131-0566-00			BUS,CONDUCTOR:DUMMY RES,0.094 OD X 0.225 L	24546	OMA 07
A10W1106	131-0566-00			BUS,CONDUCTOR:DUMMY RES,0.094 OD X 0.225 L	24546	OMA 07
A10W1107	131-0566-00			BUS,CONDUCTOR:DUMMY RES,0.094 OD X 0.225 L	24546	OMA 07
A10W1120	131-0566-00			BUS,CONDUCTOR:DUMMY RES,0.094 OD X 0.225 L	24546	OMA 07
A10W1200	131-0566-00			BUS,CONDUCTOR:DUMMY RES,0.094 OD X 0.225 L	24546	OMA 07
A10W1201	131-0566-00			BUS,CONDUCTOR:DUMMY RES,0.094 OD X 0.225 L	24546	OMA 07
A10W1202	131-0566-00			BUS,CONDUCTOR:DUMMY RES,0.094 OD X 0.225 L	24546	OMA 07
A10W1204	131-0566-00			BUS,CONDUCTOR:DUMMY RES,0.094 OD X 0.225 L	24546	OMA 07
A10W1205	131-0566-00			BUS,CONDUCTOR:DUMMY RES,0.094 OD X 0.225 L	24546	OMA 07
A10W1209	131-0566-00			BUS,CONDUCTOR:DUMMY RES,0.094 OD X 0.225 L	24546	OMA 07
A10W1210	131-0566-00			BUS,CONDUCTOR:DUMMY RES,0.094 OD X 0.225 L	24546	OMA 07
A10W1216	131-0566-00			BUS,CONDUCTOR:DUMMY RES,0.094 OD X 0.225 L	24546	OMA 07
A10W1217	131-0566-00			BUS,CONDUCTOR:DUMMY RES,0.094 OD X 0.225 L	24546	OMA 07
A10W1218	131-0566-00			BUS,CONDUCTOR:DUMMY RES,0.094 OD X 0.225 L	24546	OMA 07
A10W1221	131-0566-00			BUS,CONDUCTOR:DUMMY RES,0.094 OD X 0.225 L	24546	OMA 07
A10W1222	131-0566-00			BUS,CONDUCTOR:DUMMY RES,0.094 OD X 0.225 L	24546	OMA 07
A10W1223	131-0566-00			BUS,CONDUCTOR:DUMMY RES,0.094 OD X 0.225 L	24546	OMA 07
A10W1231	131-0566-00			BUS,CONDUCTOR:DUMMY RES,0.094 OD X 0.225 L	24546	OMA 07
A10W1237	131-0566-00			BUS,CONDUCTOR:DUMMY RES,0.094 OD X 0.225 L	24546	OMA 07
A10W1247	131-0566-00			BUS,CONDUCTOR:DUMMY RES,0.094 OD X 0.225 L	24546	OMA 07

http://www.manuals.com

Component No.	Tektronix Part No.	Serial/Assembly No. Effective	Dscont	Name & Description	Mfr. Code	Mfr. Part No.
A10W1248	131-0566-00			BUS,CONDUCTOR:DUMMY RES,0.094 OD X 0.225 L	24546	OMA 07
A10W1249	131-0566-00			BUS,CONDUCTOR:DUMMY RES,0.094 OD X 0.225 L	24546	OMA 07
A10W1250	131-0566-00			BUS,CONDUCTOR:DUMMY RES,0.094 OD X 0.225 L	24546	OMA 07
A10W1251	131-0566-00			BUS,CONDUCTOR:DUMMY RES,0.094 OD X 0.225 L	24546	OMA 07
A10W1252	131-0566-00			BUS,CONDUCTOR:DUMMY RES,0.094 OD X 0.225 L	24546	OMA 07
A10W1255	131-0566-00			BUS,CONDUCTOR:DUMMY RES,0.094 OD X 0.225 L	24546	OMA 07
A10W1277	131-0566-00			BUS,CONDUCTOR:DUMMY RES,0.094 OD X 0.225 L	24546	OMA 07
A10W1288	131-0566-00			BUS,CONDUCTOR:DUMMY RES,0.094 OD X 0.225 L	24546	OMA 07
A10W2701	131-0566-00			BUS,CONDUCTOR:DUMMY RES,0.094 OD X 0.225 L	24546	OMA 07
A10Y600	119-2051-00			RESONATOR,CER:10MHZ	51406	CSA 10:00 MX11

http://www.ebaman.com

Component No.	Tektronix Part No.	Serial/Assembly No. Effective	Dscont	Name & Description	Mfr. Code	Mfr. Part No.
A12	670-9402-01			CIRCUIT BD ASSY:POTENTIOMETER	80009	670-9402-01
A12J2105	131-3626-00			CONN,RCPT,ELEC:SIP STRIP RCPT 17 POSITION	00779	643649-1
A12R2101	311-2343-00			RES,VAR,NONWW:CKT BD,5K OHM,20%,0.5W	32997	91Z1AZ45EA0119
A12R2102	311-2345-00			RES,VAR,NONWW:CKT BD 5K OHM,20%,0.5W	32997	91Z1AZ45EA0117
A12R2103	311-2343-00			RES,VAR,NONWW:CKT BD,5K OHM,20%,0.5W	32997	91Z1AZ45EA0119
A12R2104	311-2345-00			RES,VAR,NONWW:CKT BD 5K OHM,20%,0.5W	32997	91Z1AZ45EA0117
A12R2105	311-2345-00			RES,VAR,NONWW:CKT BD 5K OHM,20%,0.5W	32997	91Z1AZ45EA0117
A12R2106	311-2345-00			RES,VAR,NONWW:CKT BD 5K OHM,20%,0.5W	32997	91Z1AZ45EA0117
A12R2107	311-2343-00			RES,VAR,NONWW:CKT BD,5K OHM,20%,0.5W	32997	91Z1AZ45EA0119
A12R2108	311-2345-00			RES,VAR,NONWW:CKT BD 5K OHM,20%,0.5W	32997	91Z1AZ45EA0117
A12R2109	311-2345-00			RES,VAR,NONWW:CKT BD 5K OHM,20%,0.5W	32997	91Z1AZ45EA0117
A12R2110	311-2345-00			RES,VAR,NONWW:CKT BD 5K OHM,20%,0.5W	32997	91Z1AZ45EA0117
A12R2111	311-2181-00			RES,VAR,NONWW:LINEAR,5K OHM,30%,0.25W	32997	91Z2D-Z45-EA0020
A12R2112	311-2345-00			RES,VAR,NONWW:CKT BD 5K OHM,20%,0.5W	32997	91Z1AZ45EA0117
A12R2113	311-2181-00			RES,VAR,NONWW:LINEAR,5K OHM,30%,0.25W	32997	91Z2D-Z45-EA0020

http://www.ebaman.com

Component No.	Tektronix Part No.	Serial/Assembly No. Effective	Dscont	Name & Description	Mfr. Code	Mfr. Part No.
A14	670-9934-00			CIRCUIT BD ASSY:SWITCH	80009	670-9934-00
A14C2001	281-0909-00			CAP,FXD,CER DI:0.022UF,20%,50V	54583	MA12X7R1H223M-T
A14CR2001	152-0141-02			SEMICOND DVC,DI:SW,SI,30V,150MA,30V,DO-35	03508	DA2527 (1N4152)
A14CR2002	152-0141-02			SEMICOND DVC,DI:SW,SI,30V,150MA,30V,DO-35	03508	DA2527 (1N4152)
A14CR2003	152-0141-02			SEMICOND DVC,DI:SW,SI,30V,150MA,30V,DO-35	03508	DA2527 (1N4152)
A14CR2004	152-0141-02			SEMICOND DVC,DI:SW,SI,30V,150MA,30V,DO-35	03508	DA2527 (1N4152)
A14CR2005	152-0141-02			SEMICOND DVC,DI:SW,SI,30V,150MA,30V,DO-35	03508	DA2527 (1N4152)
A14CR2006	152-0141-02			SEMICOND DVC,DI:SW,SI,30V,150MA,30V,DO-35	03508	DA2527 (1N4152)
A14DS2001	150-1160-00			LT EMITTING DIO:GREEN	50434	QLMP 1587
A14DS2002	150-1160-00			LT EMITTING DIO:GREEN	50434	QLMP 1587
A14DS2003	150-1160-00			LT EMITTING DIO:GREEN	50434	QLMP 1587
A14DS2004	150-1160-00			LT EMITTING DIO:GREEN	50434	QLMP 1587
A14DS2005	150-1160-00			LT EMITTING DIO:GREEN	50434	QLMP 1587
A14DS2006	150-1160-00			LT EMITTING DIO:GREEN	50434	QLMP 1587
A14DS2007	150-1160-00			LT EMITTING DIO:GREEN	50434	QLMP 1587
A14DS2008	150-1160-00			LT EMITTING DIO:GREEN	50434	QLMP 1587
A14DS2009	150-1160-00			LT EMITTING DIO:GREEN	50434	QLMP 1587
A14DS2010	150-1160-00			LT EMITTING DIO:GREEN	50434	QLMP 1587
A14DS2011	150-1160-00			LT EMITTING DIO:GREEN	50434	QLMP 1587
A14DS2012	150-1161-00			LT EMITTING DIO:YELLOW	50434	QLMP 1487
A14DS2013	150-1160-00			LT EMITTING DIO:GREEN	50434	QLMP 1587
A14DS2014	150-1160-00			LT EMITTING DIO:GREEN	50434	QLMP 1587
A14DS2015	150-1160-00			LT EMITTING DIO:GREEN	50434	QLMP 1587
A14DS2020	150-1160-00			LT EMITTING DIO:GREEN	50434	QLMP 1587
A14DS2021	150-1160-00			LT EMITTING DIO:GREEN	50434	QLMP 1587
A14DS2022	150-1161-00			LT EMITTING DIO:YELLOW	50434	QLMP 1487
A14DS2023	150-1161-00			LT EMITTING DIO:YELLOW	50434	QLMP 1487
A14DS2025	150-1160-00			LT EMITTING DIO:GREEN	50434	QLMP 1587
A14DS2026	150-1160-00			LT EMITTING DIO:GREEN	50434	QLMP 1587
A14DS2027	150-1160-00			LT EMITTING DIO:GREEN	50434	QLMP 1587
A14DS2028	150-1160-00			LT EMITTING DIO:GREEN	50434	QLMP 1587
A14DS2029	150-1160-00			LT EMITTING DIO:GREEN	50434	QLMP 1587
A14DS2030	150-1160-00			LT EMITTING DIO:GREEN	50434	QLMP 1587
A14DS2031	150-1160-00			LT EMITTING DIO:GREEN	50434	QLMP 1587
A14DS2032	150-1160-00			LT EMITTING DIO:GREEN	50434	QLMP 1587
A14DS2033	150-1160-00			LT EMITTING DIO:GREEN	50434	QLMP 1587
A14DS2034	150-1161-00			LT EMITTING DIO:YELLOW	50434	QLMP 1487
A14DS2035	150-1160-00			LT EMITTING DIO:GREEN	50434	QLMP 1587
A14DS2036	150-1160-00			LT EMITTING DIO:GREEN	50434	QLMP 1587
A14DS2037	150-1160-00			LT EMITTING DIO:GREEN	50434	QLMP 1587
A14DS2038	150-1160-00			LT EMITTING DIO:GREEN	50434	QLMP 1587
A14DS2039	150-1161-00			LT EMITTING DIO:YELLOW	50434	QLMP 1487
A14DS2041	150-1160-00			LT EMITTING DIO:GREEN	50434	QLMP 1587
A14DS2042	150-1160-00			LT EMITTING DIO:GREEN	50434	QLMP 1587
A14DS2043	150-1160-00			LT EMITTING DIO:GREEN	50434	QLMP 1587
A14DS2044	150-1161-00			LT EMITTING DIO:YELLOW	50434	QLMP 1487
A14DS2045	150-1161-00			LT EMITTING DIO:YELLOW	50434	QLMP 1487
A14DS2046	150-1161-00			LT EMITTING DIO:YELLOW	50434	QLMP 1487
A14DS2047	150-1160-00			LT EMITTING DIO:GREEN	50434	QLMP 1587
A14DS2048	150-1160-00			LT EMITTING DIO:GREEN	50434	QLMP 1587
A14R2001	307-0675-00			RES NTWK,FXD,FI:9,1K OHM,2%1.25W	11236	750-101-R1K OHM
A14R2002	307-0675-00			RES NTWK,FXD,FI:9,1K OHM,2%1.25W	11236	750-101-R1K OHM
A14U2001	156-0789-02			MICROCKT,DGTL:8 BIT SR,PRL LOAD,SCREENED	04713	SN74LS165JDS
A14U2002	156-0789-02			MICROCKT,DGTL:8 BIT SR,PRL LOAD,SCREENED	04713	SN74LS165JDS
A14W1	175-9902-00			CA ASSY,SP,ELEC:20,27 AWG,8.05 L	80009	175-9902-00

http://www.manuals.com

Component No.	Tektronix Part No.	Serial/Assembly No. Effective	Dscont	Name & Description	Mfr. Code	Mfr. Part No.
A16	671-0314-00			CIRCUIT BD ASSY:PROCESSOR	80009	671-0314-00
A16B2501	146-0055-00			BATTERY,DRY:3.0V,1200 MAH,LITHIUM	TK0510	BR-2/3A-E2P
A16C2300	281-0759-00			CAP,FXD,CER DI:22PF,10%,100V	04222	MA101A220KAA
A16C2301	285-1300-01			CAP,FXD,MTLZD:0.1UF,10%,63V	55112	185/0.1/K/63/ABA
A16C2302	285-1300-01			CAP,FXD,MTLZD:0.1UF,10%,63V	55112	185/0.1/K/63/ABA
A16C2303	285-1300-01			CAP,FXD,MTLZD:0.1UF,10%,63V	55112	185/0.1/K/63/ABA
A16C2304	281-0909-00			CAP,FXD,CER DI:0.022UF,20%,50V	54583	MA12X7R1H223M-T
A16C2305	285-1300-01			CAP,FXD,MTLZD:0.1UF,10%,63V	55112	185/0.1/K/63/ABA
A16C2306	285-1300-01			CAP,FXD,MTLZD:0.1UF,10%,63V	55112	185/0.1/K/63/ABA
A16C2307	285-1301-01			CAP,FXD,MTLZD:0.47UF,10%,50V	55112	1850.47K50ABB
A16C2308	285-1348-00			CAP,FXD,MTLZD:0.22UF,10%,63V	TK1573	ORDER BY DESCR
A16C2309	285-1301-01			CAP,FXD,MTLZD:0.47UF,10%,50V	55112	1850.47K50ABB
A16C2310	285-1348-00			CAP,FXD,MTLZD:0.22UF,10%,63V	TK1573	ORDER BY DESCR
A16C2311	281-0909-00			CAP,FXD,CER DI:0.022UF,20%,50V	54583	MA12X7R1H223M-T
A16C2312	281-0909-00			CAP,FXD,CER DI:0.022UF,20%,50V	54583	MA12X7R1H223M-T
A16C2313	281-0909-00			CAP,FXD,CER DI:0.022UF,20%,50V	54583	MA12X7R1H223M-T
A16C2314	281-0775-01			CAP,FXD,CER DI:0.1UF,20%,50V	04222	SA105E104MAA
A16C2315	281-0775-01			CAP,FXD,CER DI:0.1UF,20%,50V	04222	SA105E104MAA
A16C2316	281-0909-00			CAP,FXD,CER DI:0.022UF,20%,50V	54583	MA12X7R1H223M-T
A16C2317	281-0909-00			CAP,FXD,CER DI:0.022UF,20%,50V	54583	MA12X7R1H223M-T
A16C2318	281-0809-00			CAP,FXD,CER DI:200 PF,5%,100V	04222	MA101A201JAA
A16C2319	281-0909-00			CAP,FXD,CER DI:0.022UF,20%,50V	54583	MA12X7R1H223M-T
A16C2320	281-0798-00			CAP,FXD,CER DI:51PF,1%,100V	04222	MA101A510GAA
A16C2321	281-0909-00			CAP,FXD,CER DI:0.022UF,20%,50V	54583	MA12X7R1H223M-T
A16C2322	281-0798-00			CAP,FXD,CER DI:51PF,1%,100V	04222	MA101A510GAA
A16C2323	281-0798-00			CAP,FXD,CER DI:51PF,1%,100V	04222	MA101A510GAA
A16C2324	285-1300-01			CAP,FXD,MTLZD:0.1UF,10%,63V	55112	185/0.1/K/63/ABA
A16C2401	281-0909-00			CAP,FXD,CER DI:0.022UF,20%,50V	54583	MA12X7R1H223M-T
A16C2402	281-0909-00			CAP,FXD,CER DI:0.022UF,20%,50V	54583	MA12X7R1H223M-T
A16C2403	281-0909-00			CAP,FXD,CER DI:0.022UF,20%,50V	54583	MA12X7R1H223M-T
A16C2404	281-0909-00			CAP,FXD,CER DI:0.022UF,20%,50V	54583	MA12X7R1H223M-T
A16C2405	281-0909-00			CAP,FXD,CER DI:0.022UF,20%,50V	54583	MA12X7R1H223M-T
A16C2406	281-0909-00			CAP,FXD,CER DI:0.022UF,20%,50V	54583	MA12X7R1H223M-T
A16C2407	281-0909-00			CAP,FXD,CER DI:0.022UF,20%,50V	54583	MA12X7R1H223M-T
A16C2408	281-0909-00			CAP,FXD,CER DI:0.022UF,20%,50V	54583	MA12X7R1H223M-T
A16C2409	281-0909-00			CAP,FXD,CER DI:0.022UF,20%,50V	54583	MA12X7R1H223M-T
A16C2410	281-0909-00			CAP,FXD,CER DI:0.022UF,20%,50V	54583	MA12X7R1H223M-T
A16C2411	281-0809-00			CAP,FXD,CER DI:200 PF,5%,100V	04222	MA101A201JAA
A16C2412	281-0809-00			CAP,FXD,CER DI:200 PF,5%,100V	04222	MA101A201JAA
A16C2415	281-0775-01			CAP,FXD,CER DI:0.1UF,20%,50V	04222	SA105E104MAA
A16C2416	281-0798-00			CAP,FXD,CER DI:51PF,1%,100V	04222	MA101A510GAA
A16C2417	281-0798-00			CAP,FXD,CER DI:51PF,1%,100V	04222	MA101A510GAA
A16C2418	281-0798-00			CAP,FXD,CER DI:51PF,1%,100V	04222	MA101A510GAA
A16C2419	281-0798-00			CAP,FXD,CER DI:51PF,1%,100V	04222	MA101A510GAA
A16C2420	281-0798-00			CAP,FXD,CER DI:51PF,1%,100V	04222	MA101A510GAA
A16C2501	281-0909-00			CAP,FXD,CER DI:0.022UF,20%,50V	54583	MA12X7R1H223M-T
A16C2502	281-0909-00			CAP,FXD,CER DI:0.022UF,20%,50V	54583	MA12X7R1H223M-T
A16C2503	281-0909-00			CAP,FXD,CER DI:0.022UF,20%,50V	54583	MA12X7R1H223M-T
A16C2504	281-0909-00			CAP,FXD,CER DI:0.022UF,20%,50V	54583	MA12X7R1H223M-T
A16C2505	281-0909-00			CAP,FXD,CER DI:0.022UF,20%,50V	54583	MA12X7R1H223M-T
A16C2506	281-0909-00			CAP,FXD,CER DI:0.022UF,20%,50V	54583	MA12X7R1H223M-T
A16C2507	281-0909-00			CAP,FXD,CER DI:0.022UF,20%,50V	54583	MA12X7R1H223M-T
A16C2508	281-0909-00			CAP,FXD,CER DI:0.022UF,20%,50V	54583	MA12X7R1H223M-T
A16C2509	281-0909-00			CAP,FXD,CER DI:0.022UF,20%,50V	54583	MA12X7R1H223M-T
A16C2510	281-0909-00			CAP,FXD,CER DI:0.022UF,20%,50V	54583	MA12X7R1H223M-T
A16C2511	281-0909-00			CAP,FXD,CER DI:0.022UF,20%,50V	54583	MA12X7R1H223M-T
A16C2514	281-0759-00			CAP,FXD,CER DI:22PF,10%,100V	04222	MA101A220KAA
A16C2515	281-0759-00			CAP,FXD,CER DI:22PF,10%,100V	04222	MA101A220KAA

http://www.manuals.com

Component No.	Tektronix Part No.	Serial/Assembly No. Effective	Dscont	Name & Description	Mfr. Code	Mfr. Part No.
A16C2516	285-1301-01			CAP,FXD,MTLZD:0.47UF,10%,50V	55112	1850.47K50ABB
A16C2517	281-0775-01			CAP,FXD,CER DI:0.1UF,20%,50V	04222	SA105E104MAA
A16C2518	285-1301-01			CAP,FXD,MTLZD:0.47UF,10%,50V	55112	1850.47K50ABB
A16C2521	281-0772-00			CAP,FXD,CER DI:4700PF,10%,100V	04222	MA201C472KAA
A16C2522	281-0772-00			CAP,FXD,CER DI:4700PF,10%,100V	04222	MA201C472KAA
A16C2523	281-0772-00			CAP,FXD,CER DI:4700PF,10%,100V	04222	MA201C472KAA
A16C2524	281-0772-00			CAP,FXD,CER DI:4700PF,10%,100V	04222	MA201C472KAA
A16C2525	281-0772-00			CAP,FXD,CER DI:4700PF,10%,100V	04222	MA201C472KAA
A16C2526	281-0772-00			CAP,FXD,CER DI:4700PF,10%,100V	04222	MA201C472KAA
A16C2530	281-0909-00			CAP,FXD,CER DI:0.022UF,20%,50V	54583	MA12X7R1H223M-T
A16C2531	281-0909-00			CAP,FXD,CER DI:0.022UF,20%,50V	54583	MA12X7R1H223M-T
A16C2532	281-0909-00			CAP,FXD,CER DI:0.022UF,20%,50V	54583	MA12X7R1H223M-T
A16C2541	290-0748-00			CAP,FXD,ELCTLT:10UF,+50-20%,25WVDC	54473	ECE-BIEV100S
A16C2543	281-0772-00			CAP,FXD,CER DI:4700PF,10%,100V	04222	MA201C472KAA
A16C2544	281-0772-00			CAP,FXD,CER DI:4700PF,10%,100V	04222	MA201C472KAA
A16C2545	281-0772-00			CAP,FXD,CER DI:4700PF,10%,100V	04222	MA201C472KAA
A16C2546	281-0772-00			CAP,FXD,CER DI:4700PF,10%,100V	04222	MA201C472KAA
A16C2547	281-0772-00			CAP,FXD,CER DI:4700PF,10%,100V	04222	MA201C472KAA
A16C2548	281-0772-00			CAP,FXD,CER DI:4700PF,10%,100V	04222	MA201C472KAA
A16C2549	281-0772-00			CAP,FXD,CER DI:4700PF,10%,100V	04222	MA201C472KAA
A16C2550	281-0772-00			CAP,FXD,CER DI:4700PF,10%,100V	04222	MA201C472KAA
A16C2551	281-0798-00			CAP,FXD,CER DI:51PF,1%,100V	04222	MA101A510GAA
A16C2552	281-0798-00			CAP,FXD,CER DI:51PF,1%,100V	04222	MA101A510GAA
A16C2553	281-0798-00			CAP,FXD,CER DI:51PF,1%,100V	04222	MA101A510GAA
A16C2554	281-0798-00			CAP,FXD,CER DI:51PF,1%,100V	04222	MA101A510GAA
A16C2555	281-0798-00			CAP,FXD,CER DI:51PF,1%,100V	04222	MA101A510GAA
A16CR2501	152-0141-02			SEMICOND DVC,DI:SW,SI,30V,150MA,30V,DO-35	03508	DA2527 (1N4152)
A16CR2502	152-0951-00			SEMICOND DVC DI:SI,SCHOTTKY,60V,2.2PF	50434	IN6263
A16CR2504	152-0141-02			SEMICOND DVC,DI:SW,SI,30V,150MA,30V,DO-35	03508	DA2527 (1N4152)
A16CR2505	152-0951-00			SEMICOND DVC DI:SI,SCHOTTKY,60V,2.2PF	50434	IN6263
A16DS2501	150-1161-00			LT EMITTING DIO:YELLOW	50434	QLMP 1487
A16J2301	131-3623-00			CONN,RCPT,ELEC:SIP STRIP RCPT 25 POSITION	00779	643657-1
A16J2302	136-0949-00			SKT,PL-IN,ELEK:18 POS,SIP,LOW PROFILE	80009	136-0949-00
A16J2304	136-0948-00			SKT,PL-IN,ELEK:12 POS,SIP,LOW PROFILE	80009	136-0948-00
A16J2501	131-3624-00			CONN,RCPT,ELEC:SIP STRIP RCPT 20 POSITION	00779	643652-1
A16J2502	131-3623-00			CONN,RCPT,ELEC:SIP STRIP RCPT 25 POSITION	00779	643657-1
A16Q2501	151-0716-01			TRANSISTOR:NPN,SI,PWR DARLINGTON,1W,TO-92	80009	151-0716-01
A16Q2502	151-0716-01			TRANSISTOR:NPN,SI,PWR DARLINGTON,1W,TO-92	80009	151-0716-01
A16Q2503	151-0716-01			TRANSISTOR:NPN,SI,PWR DARLINGTON,1W,TO-92	80009	151-0716-01
A16Q2504	151-0716-01			TRANSISTOR:NPN,SI,PWR DARLINGTON,1W,TO-92	80009	151-0716-01
A16Q2505	151-0716-01			TRANSISTOR:NPN,SI,PWR DARLINGTON,1W,TO-92	80009	151-0716-01
A16Q2506	151-0716-01			TRANSISTOR:NPN,SI,PWR DARLINGTON,1W,TO-92	80009	151-0716-01
A16Q2507	151-0190-00			TRANSISTOR:NPN,SI,TO-92	80009	151-0190-00
A16R2301	322-3260-00			RES,FXD,FILM:4.99K OHM,1%,0.2W,TC=T0	57668	CRB20 FXE 4K99
A16R2302	313-1472-00			RES,FXD,FILM:4.7K OHM,5%,0.2W	57668	TR20JE 04K7
A16R2303	322-3231-00			RES,FXD,FILM:2.49K OHM,1%,0.2W,TC=T0	57668	CRB20 FXE 2K49
A16R2304	313-1203-00			RES,FXD,FILM:20K OHM,5%,0.2W	57668	TR20JE20K
A16R2305	313-1203-00			RES,FXD,FILM:20K OHM,5%,0.2W	57668	TR20JE20K
A16R2306	313-1472-00			RES,FXD,FILM:4.7K OHM,5%,0.2W	57668	TR20JE 04K7
A16R2307	313-1472-00			RES,FXD,FILM:4.7K OHM,5%,0.2W	57668	TR20JE 04K7
A16R2308	313-1621-00			RES,FXD,FILM:620 OHM,5%,0.2W	57668	TR20JE 620E
A16R2309	313-1101-00			RES,FXD,FILM:100 OHM,5%,0.2W	57668	TR20JE100E
A16R2310	313-1472-00			RES,FXD,FILM:4.7K OHM,5%,0.2W	57668	TR20JE 04K7
A16R2311	322-3231-00			RES,FXD,FILM:2.49K OHM,1%,0.2W,TC=T0	57668	CRB20 FXE 2K49
A16R2312	322-3252-00			RES,FXD,FILM:4.12K OHM,1%,0.2W,TC=T0	57668	CRB20 FXE 4K12
A16R2313	322-3252-00			RES,FXD,FILM:4.12K OHM,1%,0.2W,TC=T0	57668	CRB20 FXE 4K12
A16R2314	322-3231-00			RES,FXD,FILM:2.49K OHM,1%,0.2W,TC=T0	57668	CRB20 FXE 2K49
A16R2315	322-3238-00			RES,FXD,FILM:2.94K OHM,1%,0.2W,TC=T0	57668	CRB20 FXE 2K94

http://www.manuals.com

Component No.	Tektronix Part No.	Serial/Assembly No. Effective	Dscont	Name & Description	Mfr. Code	Mfr. Part No.
A16R2316	322-3231-00			RES,FXD,FILM:2.49K OHM,1%,0.2W,TC=T0	57668	CRB20 FXE 2K49
A16R2317	322-3231-00			RES,FXD,FILM:2.49K OHM,1%,0.2W,TC=T0	57668	CRB20 FXE 2K49
A16R2318	322-3238-00			RES,FXD,FILM:2.94K OHM,1%,0.2W,TC=T0	57668	CRB20 FXE 2K94
A16R2319	313-1472-00			RES,FXD,FILM:4.7K OHM,5%,0.2W	57668	TR20JE 04K7
A16R2320	313-1472-00			RES,FXD,FILM:4.7K OHM,5%,0.2W	57668	TR20JE 04K7
A16R2321	313-1472-00			RES,FXD,FILM:4.7K OHM,5%,0.2W	57668	TR20JE 04K7
A16R2322	313-1472-00			RES,FXD,FILM:4.7K OHM,5%,0.2W	57668	TR20JE 04K7
A16R2323	313-1472-00			RES,FXD,FILM:4.7K OHM,5%,0.2W	57668	TR20JE 04K7
A16R2324	313-1472-00			RES,FXD,FILM:4.7K OHM,5%,0.2W	57668	TR20JE 04K7
A16R2325	307-0499-00			RES,FXD,FILM:9,100K OHM,5%,0.125W	11236	750-101-R100K
A16R2326	313-1472-00			RES,FXD,FILM:4.7K OHM,5%,0.2W	57668	TR20JE 04K7
A16R2327	313-1472-00			RES,FXD,FILM:4.7K OHM,5%,0.2W	57668	TR20JE 04K7
A16R2328	313-1472-00			RES,FXD,FILM:4.7K OHM,5%,0.2W	57668	TR20JE 04K7
A16R2329	313-1472-00			RES,FXD,FILM:4.7K OHM,5%,0.2W	57668	TR20JE 04K7
A16R2330	313-1472-00			RES,FXD,FILM:4.7K OHM,5%,0.2W	57668	TR20JE 04K7
A16R2331	313-1472-00			RES,FXD,FILM:4.7K OHM,5%,0.2W	57668	TR20JE 04K7
A16R2332	313-1220-00			RES,FXD,FILM:22 OHM,5%,0.2W	57668	TR20JE22E
A16R2333	313-1220-00			RES,FXD,FILM:22 OHM,5%,0.2W	57668	TR20JE22E
A16R2334	313-1220-00			RES,FXD,FILM:22 OHM,5%,0.2W	57668	TR20JE22E
A16R2335	313-1220-00			RES,FXD,FILM:22 OHM,5%,0.2W	57668	TR20JE22E
A16R2336	313-1220-00			RES,FXD,FILM:22 OHM,5%,0.2W	57668	TR20JE22E
A16R2337	313-1472-00			RES,FXD,FILM:4.7K OHM,5%,0.2W	57668	TR20JE 04K7
A16R2338	313-1472-00			RES,FXD,FILM:4.7K OHM,5%,0.2W	57668	TR20JE 04K7
A16R2339	313-1472-00			RES,FXD,FILM:4.7K OHM,5%,0.2W	57668	TR20JE 04K7
A16R2340	313-1472-00			RES,FXD,FILM:4.7K OHM,5%,0.2W	57668	TR20JE 04K7
A16R2341	313-1472-00			RES,FXD,FILM:4.7K OHM,5%,0.2W	57668	TR20JE 04K7
A16R2342	313-1472-00			RES,FXD,FILM:4.7K OHM,5%,0.2W	57668	TR20JE 04K7
A16R2343	313-1472-00			RES,FXD,FILM:4.7K OHM,5%,0.2W	57668	TR20JE 04K7
A16R2344	313-1472-00			RES,FXD,FILM:4.7K OHM,5%,0.2W	57668	TR20JE 04K7
A16R2345	313-1472-00			RES,FXD,FILM:4.7K OHM,5%,0.2W	57668	TR20JE 04K7
A16R2346	313-1472-00			RES,FXD,FILM:4.7K OHM,5%,0.2W	57668	TR20JE 04K7
A16R2347	313-1472-00			RES,FXD,FILM:4.7K OHM,5%,0.2W	57668	TR20JE 04K7
A16R2348	313-1472-00			RES,FXD,FILM:4.7K OHM,5%,0.2W	57668	TR20JE 04K7
A16R2349	313-1472-00			RES,FXD,FILM:4.7K OHM,5%,0.2W	57668	TR20JE 04K7
A16R2350	313-1472-00			RES,FXD,FILM:4.7K OHM,5%,0.2W	57668	TR20JE 04K7
A16R2351	313-1472-00			RES,FXD,FILM:4.7K OHM,5%,0.2W	57668	TR20JE 04K7
A16R2352	313-1472-00			RES,FXD,FILM:4.7K OHM,5%,0.2W	57668	TR20JE 04K7
A16R2353	313-1472-00			RES,FXD,FILM:4.7K OHM,5%,0.2W	57668	TR20JE 04K7
A16R2354	313-1472-00			RES,FXD,FILM:4.7K OHM,5%,0.2W	57668	TR20JE 04K7
A16R2355	313-1102-00			RES,FXD,FILM:1K OHM,5%,0.2W	57668	TR20JE01K0
A16R2356	313-1102-00			RES,FXD,FILM:1K OHM,5%,0.2W	57668	TR20JE01K0
A16R2357	313-1102-00			RES,FXD,FILM:1K OHM,5%,0.2W	57668	TR20JE01K0
A16R2400	313-1472-00			RES,FXD,FILM:4.7K OHM,5%,0.2W	57668	TR20JE 04K7
A16R2401	313-1472-00			RES,FXD,FILM:4.7K OHM,5%,0.2W	57668	TR20JE 04K7
A16R2402	313-1472-00			RES,FXD,FILM:4.7K OHM,5%,0.2W	57668	TR20JE 04K7
A16R2404	313-1472-00			RES,FXD,FILM:4.7K OHM,5%,0.2W	57668	TR20JE 04K7
A16R2405	313-1621-00			RES,FXD,FILM:620 OHM,5%,0.2W	57668	TR20JE 620E
A16R2406	322-3220-00			RES,FXD,FILM:1.91K OHM,1%,0.2W,TC=T0	80009	322-3220-00
A16R2407	322-3176-00			RES,FXD,FILM:665 OHM,1%,0.2W,TC=T0	91637	CCF50-2
A16R2408	322-3172-00			RES,FXD,FILM:604 OHM,1%,0.2W,TC=T0	57668	CRB20 FXE 604E
A16R2409	322-3220-00			RES,FXD,FILM:1.91K OHM,1%,0.2W,TC=T0	80009	322-3220-00
A16R2410	322-3172-00			RES,FXD,FILM:604 OHM,1%,0.2W,TC=T0	57668	CRB20 FXE 604E
A16R2411	322-3220-00			RES,FXD,FILM:1.91K OHM,1%,0.2W,TC=T0	80009	322-3220-00
A16R2412	313-1102-00			RES,FXD,FILM:1K OHM,5%,0.2W	57668	TR20JE01K0
A16R2413	322-3202-00			RES,FXD,FILM:1.24K OHM,1%,0.2W,TC=T0	57668	CRB20 FXE 1K24
A16R2414	313-1102-00			RES,FXD,FILM:1K OHM,5%,0.2W	57668	TR20JE01K0
A16R2415	322-3202-00			RES,FXD,FILM:1.24K OHM,1%,0.2W,TC=T0	57668	CRB20 FXE 1K24
A16R2416	313-1102-00			RES,FXD,FILM:1K OHM,5%,0.2W	57668	TR20JE01K0

http://www.manuals.com

Component No.	Tektronix Part No.	Serial/Assembly No. Effective	Dscont	Name & Description	Mfr. Code	Mfr. Part No.
A16R2417	322-3202-00			RES,FXD,FILM:1.24K OHM,1%,0.2W,TC=T0	57668	CRB20 FXE 1K24
A16R2418	322-3077-00			RES,FXD,FILM:61.9 OHM,1%,0.2W,TC=T0	80009	322-3077-00
A16R2419	313-1101-00			RES,FXD,FILM:100 OHM,5%,0.2W	57668	TR20JE100E
A16R2420	313-1101-00			RES,FXD,FILM:100 OHM,5%,0.2W	57668	TR20JE100E
A16R2421	313-1472-00			RES,FXD,FILM:4.7K OHM,5%,0.2W	57668	TR20JE 04K7
A16R2501	313-1621-00			RES,FXD,FILM:620 OHM,5%,0.2W	57668	TR20JE 620E
A16R2502	313-1472-00			RES,FXD,FILM:4.7K OHM,5%,0.2W	57668	TR20JE 04K7
A16R2503	313-1621-00			RES,FXD,FILM:620 OHM,5%,0.2W	57668	TR20JE 620E
A16R2504	313-1472-00			RES,FXD,FILM:4.7K OHM,5%,0.2W	57668	TR20JE 04K7
A16R2505	313-1621-00			RES,FXD,FILM:620 OHM,5%,0.2W	57668	TR20JE 620E
A16R2506	313-1621-00			RES,FXD,FILM:620 OHM,5%,0.2W	57668	TR20JE 620E
A16R2508	313-1102-00			RES,FXD,FILM:1K OHM,5%,0.2W	57668	TR20JE01K0
A16R2509	313-1102-00			RES,FXD,FILM:1K OHM,5%,0.2W	57668	TR20JE01K0
A16R2510	313-1102-00			RES,FXD,FILM:1K OHM,5%,0.2W	57668	TR20JE01K0
A16R2511	313-1102-00			RES,FXD,FILM:1K OHM,5%,0.2W	57668	TR20JE01K0
A16R2512	313-1472-00			RES,FXD,FILM:4.7K OHM,5%,0.2W	57668	TR20JE 04K7
A16R2513	313-1472-00			RES,FXD,FILM:4.7K OHM,5%,0.2W	57668	TR20JE 04K7
A16R2514	313-1621-00			RES,FXD,FILM:620 OHM,5%,0.2W	57668	TR20JE 620E
A16R2515	313-1621-00			RES,FXD,FILM:620 OHM,5%,0.2W	57668	TR20JE 620E
A16R2516	313-1621-00			RES,FXD,FILM:620 OHM,5%,0.2W	57668	TR20JE 620E
A16R2517	313-1621-00			RES,FXD,FILM:620 OHM,5%,0.2W	57668	TR20JE 620E
A16R2518	313-1102-00			RES,FXD,FILM:1K OHM,5%,0.2W	57668	TR20JE01K0
A16R2519	313-1621-00			RES,FXD,FILM:620 OHM,5%,0.2W	57668	TR20JE 620E
A16R2520	307-0499-00			RES,FXD,FILM:9,100K OHM,5%,0.125W	11236	750-101-R100K
A16R2521	307-0499-00			RES,FXD,FILM:9,100K OHM,5%,0.125W	11236	750-101-R100K
A16R2522	307-0499-00			RES,FXD,FILM:9,100K OHM,5%,0.125W	11236	750-101-R100K
A16R2523	313-1102-00			RES,FXD,FILM:1K OHM,5%,0.2W	57668	TR20JE01K0
A16R2524	313-1102-00			RES,FXD,FILM:1K OHM,5%,0.2W	57668	TR20JE01K0
A16R2526	313-1621-00			RES,FXD,FILM:620 OHM,5%,0.2W	57668	TR20JE 620E
A16R2527	313-1621-00			RES,FXD,FILM:620 OHM,5%,0.2W	57668	TR20JE 620E
A16R2528	313-1621-00			RES,FXD,FILM:620 OHM,5%,0.2W	57668	TR20JE 620E
A16R2529	313-1621-00			RES,FXD,FILM:620 OHM,5%,0.2W	57668	TR20JE 620E
A16R2531	313-1102-00			RES,FXD,FILM:1K OHM,5%,0.2W	57668	TR20JE01K0
A16R2532	313-1102-00			RES,FXD,FILM:1K OHM,5%,0.2W	57668	TR20JE01K0
A16R2533	313-1102-00			RES,FXD,FILM:1K OHM,5%,0.2W	57668	TR20JE01K0
A16R2534	313-1102-00			RES,FXD,FILM:1K OHM,5%,0.2W	57668	TR20JE01K0
A16R2535	313-1102-00			RES,FXD,FILM:1K OHM,5%,0.2W	57668	TR20JE01K0
A16R2536	313-1102-00			RES,FXD,FILM:1K OHM,5%,0.2W	57668	TR20JE01K0
A16R2537	313-1102-00			RES,FXD,FILM:1K OHM,5%,0.2W	57668	TR20JE01K0
A16R2538	313-1102-00			RES,FXD,FILM:1K OHM,5%,0.2W	57668	TR20JE01K0
A16R2539	313-1102-00			RES,FXD,FILM:1K OHM,5%,0.2W	57668	TR20JE01K0
A16R2540	313-1102-00			RES,FXD,FILM:1K OHM,5%,0.2W	57668	TR20JE01K0
A16R2541	313-1102-00			RES,FXD,FILM:1K OHM,5%,0.2W	57668	TR20JE01K0
A16R2542	313-1102-00			RES,FXD,FILM:1K OHM,5%,0.2W	57668	TR20JE01K0
A16R2546	313-1220-00			RES,FXD,FILM:22 OHM,5%,0.2W	57668	TR20JE22E
A16R2547	313-1220-00			RES,FXD,FILM:22 OHM,5%,0.2W	57668	TR20JE22E
A16R2548	313-1220-00			RES,FXD,FILM:22 OHM,5%,0.2W	57668	TR20JE22E
A16R2549	313-1220-00			RES,FXD,FILM:22 OHM,5%,0.2W	57668	TR20JE22E
A16R2550	313-1220-00			RES,FXD,FILM:22 OHM,5%,0.2W	57668	TR20JE22E
A16R2551	313-1220-00			RES,FXD,FILM:22 OHM,5%,0.2W	57668	TR20JE22E
A16R2552	313-1220-00			RES,FXD,FILM:22 OHM,5%,0.2W	57668	TR20JE22E
A16R2553	313-1220-00			RES,FXD,FILM:22 OHM,5%,0.2W	57668	TR20JE22E
A16R2554	313-1102-00			RES,FXD,FILM:1K OHM,5%,0.2W	57668	TR20JE01K0
A16R2555	313-1101-00			RES,FXD,FILM:100 OHM,5%,0.2W	57668	TR20JE100E
A16R2560	313-1101-00			RES,FXD,FILM:100 OHM,5%,0.2W	57668	TR20JE100E
A16R2561	313-1101-00			RES,FXD,FILM:100 OHM,5%,0.2W	57668	TR20JE100E
A16R2562	313-1101-00			RES,FXD,FILM:100 OHM,5%,0.2W	57668	TR20JE100E
A16R2563	313-1101-00			RES,FXD,FILM:100 OHM,5%,0.2W	57668	TR20JE100E

http://www.manuals.com

Component No.	Tektronix Part No.	Serial/Assembly No. Effective	Dscont	Name & Description	Mfr. Code	Mfr. Part No.
A16R2564	313-1101-00			RES,FXD,FILM:100 OHM,5%,0.2W	57668	TR20JE100E
A16U2300	156-1646-00			MICROCKT,DGTL:CMOS,OCTAL D-TYPE EDGE TRIG	TK0273	MD74HCT374RE
A16U2301	156-1646-00			MICROCKT,DGTL:CMOS,OCTAL D-TYPE EDGE TRIG	TK0273	MD74HCT374RE
A16U2302	156-1589-00			MICROCKT,LINEAR:D/A CONVERTER,HIGH SPEED	06665	DAC312FR
A16U2303	156-0513-00			MICROCKT,DGTL:CMOS,8-CHANNEL MUX	04713	MC14051BCL
A16U2304	156-1200-00			MICROCKT,LINEAR:OPERATIONAL AMP,QUAD BI-FET	01295	TL074CN
A16U2305	156-1200-00			MICROCKT,LINEAR:OPERATIONAL AMP,QUAD BI-FET	01295	TL074CN
A16U2306	156-1126-00			MICROCKT,LINEAR:VOLTAGE COMPARATOR	01295	LM311P
A16U2307	156-1646-00			MICROCKT,DGTL:CMOS,OCTAL D-TYPE EDGE TRIG	TK0273	MD74HCT374RE
A16U2308	156-0513-00			MICROCKT,DGTL:CMOS,8-CHANNEL MUX	04713	MC14051BCL
A16U2309	156-0513-00			MICROCKT,DGTL:CMOS,8-CHANNEL MUX	04713	MC14051BCL
A16U2310	156-0515-00			MICROCKT,DGTL:CMOS,TRIPLE 2-CHAN MUX	02735	CD4053BF
A16U2311	156-0515-00			MICROCKT,DGTL:CMOS,TRIPLE 2-CHAN MUX	02735	CD4053BF
A16U2312	156-0515-00			MICROCKT,DGTL:CMOS,TRIPLE 2-CHAN MUX	02735	CD4053BF
A16U2313	156-1646-00			MICROCKT,DGTL:CMOS,OCTAL D-TYPE EDGE TRIG	TK0273	MD74HCT374RE
A16U2314	156-1149-00			MICROCKT,LINEAR:OPERATIONAL AMP,JFET INPUT	27014	LF351N/GLEA134
A16U2400	160-3493-00			MICROCKT,DGTL:8 BIT MICROCOMPUTER,MASKED	80009	160-3493-00
A16U2401	156-1646-00			MICROCKT,DGTL:CMOS,OCTAL D-TYPE EDGE TRIG	TK0273	MD74HCT374RE
A16U2402	156-1646-00			MICROCKT,DGTL:CMOS,OCTAL D-TYPE EDGE TRIG	TK0273	MD74HCT374RE
A16U2403	156-1646-00			MICROCKT,DGTL:CMOS,OCTAL D-TYPE EDGE TRIG	TK0273	MD74HCT374RE
A16U2404	156-0412-00			MICROCKT,DGTL:SYN 4-BIT UP/DN CNTR,DUAL CLK	80009	156-0412-00
A16U2405	156-0412-00			MICROCKT,DGTL:SYN 4-BIT UP/DN CNTR,DUAL CLK	80009	156-0412-00
A16U2406	156-1594-00			MICROCKT,DGTL:NMOS,2048 X 8 SRAM	TK1015	HM6116P-3(DP-24)
A16U2407	156-1172-00			MICROCKT,DGTL:DUAL 4 BIT BIN CNTR	01295	SN74LS393N
A16U2408	160-5391-00			MICROCKT,DGTL:NMOS,4096 X 8 EPROM,PRGM	80009	160-5391-00
A16U2409	156-1172-00			MICROCKT,DGTL:DUAL 4 BIT BIN CNTR	01295	SN74LS393N
A16U2410	160-4085-00			MICROCKT,DGTL:OCT 16 INP REG AND/OR	TK2051	156-0442-00
A16U2411	156-1646-00			MICROCKT,DGTL:CMOS,OCTAL D-TYPE EDGE TRIG	TK0273	MD74HCT374RE
A16U2412	156-1255-00			MICROCKT,LINEAR:D/A CONVERTER,8 BIT	06665	DAC08-157Q
A16U2413	156-1255-00			MICROCKT,LINEAR:D/A CONVERTER,8 BIT	06665	DAC08-157Q
A16U2414	156-0514-00			MICROCKT,DGTL:CMOS,DIFF 4-CHANNEL MUX	02735	CD4052BF-98
A16U2415	156-0514-00			MICROCKT,DGTL:CMOS,DIFF 4-CHANNEL MUX	02735	CD4052BF-98
A16U2416	156-1200-00			MICROCKT,LINEAR:OPERATIONAL AMP,QUAD BI-FET	01295	TL074CN
A16U2417	156-0382-00			MICROCKT,DGTL:QUAD 2-INP NAND GATE	01295	SN74LS00(N OR J)
A16U2501	156-2003-01			MICROCKT,DGTL:MOS,MICROPRC,8 BIT,8 MHZ	34649	C80188PC
A16U2503	156-0479-00			MICROCKT,DGTL:QUAD 2-INP OR GATE	01295	SN74LS32(N OR J)
A16U2506	156-0382-00			MICROCKT,DGTL:QUAD 2-INP NAND GATE	01295	SN74LS00(N OR J)
A16U2512	156-1065-01			MICROCKT,DGTL:OCTAL D TYPE TRANS LATCHES	04713	SN74LS373 ND/JD
A16U2513	156-1065-01			MICROCKT,DGTL:OCTAL D TYPE TRANS LATCHES	04713	SN74LS373 ND/JD
A16U2514	156-1111-00			MICROCKT,DGTL:OCTAL BUS TRANSCEIVERS	01295	SN74LS245N
A16U2515	156-1111-00			MICROCKT,DGTL:OCTAL BUS TRANSCEIVERS	01295	SN74LS245N
A16U2517	156-0469-00			MICROCKT,DGTL:3-LINE TO 8-LINE DECODER	01295	SN74LS138N
A16U2518	156-0469-00			MICROCKT,DGTL:3-LINE TO 8-LINE DECODER	01295	SN74LS138N
A16U2519	160-5063-00			MICROCKT,DGTL:131072 X 8 BIT,UV-EPROM,250NS	80009	160-5063-00
A16U2521	156-2473-00			MICROCKT,DGTL:8192 X 8 CMOS,SRAM	TK0961	uPD4464C-20
A16U2523	156-1646-00			MICROCKT,DGTL:CMOS,OCTAL D-TYPE EDGE TRIG	TK0273	MD74HCT374RE
A16U2524	156-1646-00			MICROCKT,DGTL:CMOS,OCTAL D-TYPE EDGE TRIG	TK0273	MD74HCT374RE
A16U2525	156-1058-00			MICROCKT,DGTL:STTL,OCTAL SCHMITT TRIGGER	01295	SN74S240J
A16W2303	174-1040-00			CA ASSY,SP,ELEC:17 COND,5.1 L,RIBBON	80009	174-1040-00
A16XU2400	136-0755-00			SKT,PL-IN ELEK:MICROCIRCUIT,28 DIP	09922	DILB28P-108
A16XU2501	136-0813-00			SKT,PL-IN ELEK:CHIP CARRIER,68 CONTACTS	19613	268-5400-00-1102
A16XU2519	136-0963-00			SKT,PL-IN ELEK:MICROCKT,32 PIN	80009	136-0963-00
A16Y2501	119-2936-00			RESONATOR:16MHZ,CER	80009	119-2936-00

http://www.tekscope.com

Component No.	Tektronix Part No.	Serial/Assembly No. Effective	Dscont	Name & Description	Mfr. Code	Mfr. Part No.
A18	670-9398-03			CIRCUIT BD ASSY:LV POWER SUPPLY,A18	80009	670-9398-03
A18C2201	285-1177-01			CAP,FXD,PLASTIC:1UF,10%,450V	80009	285-1177-01
A18C2202	290-1118-00			CAP,FXD,ELCTLT:220UF,20%,400V	TK1424	CEFTW2G221B
A18C2203	290-0922-01			CAP,FXD,ELCTLT:1000UF,4100% -10%,50V	56289	674D108H050JJ5A
A18C2204	290-1151-00			CAP,FXD,ELCTLT:100UF,20%,63V	55680	VEB1J101MRA
A18C2206	281-0775-01			CAP,FXD,CER DI:0.1UF,20%,50V	04222	SA105E104MAA
A18C2207	281-0775-01			CAP,FXD,CER DI:0.1UF,20%,50V	04222	SA105E104MAA
A18C2208	290-1144-00			CAP,FXD,ELCTLT:4.7UF,20%,100V	80009	290-1144-00
A18C2209	281-0773-00			CAP,FXD,CER DI:0.01UF,10%,100V	04222	MA201C103KAA
A18C2210	290-1144-00			CAP,FXD,ELCTLT:4.7UF,20%,100V	80009	290-1144-00
A18C2211	281-0773-00			CAP,FXD,CER DI:0.01UF,10%,100V	04222	MA201C103KAA
A18C2212	281-0761-00			CAP,FXD,CER DI:27PF,5%,100V	04222	MA101A270JAA
A18C2213	285-1381-00			CAP,FXD,MTLZD:1500PF,10%,250V	TK0515	PME271Y415
A18C2214	285-1381-00			CAP,FXD,MTLZD:1500PF,10%,250V	TK0515	PME271Y415
A18C2215	285-1252-00			CAP,FXD,PLASTIC:0.15UF,10%,250VAC	D5243	F1772-415-2000
A18C2216	285-1252-00			CAP,FXD,PLASTIC:0.15UF,10%,250VAC	D5243	F1772-415-2000
A18C2217	285-1381-00			CAP,FXD,MTLZD:1500PF,10%,250V	TK0515	PME271Y415
A18C2218	281-0813-00			CAP,FXD,CER DI:0.047UF,20%,50V	05397	C412C473M5V2CA
A18C2219	281-0773-00			CAP,FXD,CER DI:0.01UF,10%,100V	04222	MA201C103KAA
A18C2221	290-1129-00			CAP,FXD,ELCTLT:1000UF,+100%-10%,12V	56289	ORDER BY DESCR
A18C2222	290-1129-00			CAP,FXD,ELCTLT:1000UF,+100%-10%,12V	56289	ORDER BY DESCR
A18C2223	290-1129-00			CAP,FXD,ELCTLT:1000UF,+100%-10%,12V	56289	ORDER BY DESCR
A18C2224	290-1129-00			CAP,FXD,ELCTLT:1000UF,+100%-10%,12V	56289	ORDER BY DESCR
A18C2225	290-1129-00			CAP,FXD,ELCTLT:1000UF,+100%-10%,12V	56289	ORDER BY DESCR
A18C2226	290-1129-00			CAP,FXD,ELCTLT:1000UF,+100%-10%,12V	56289	ORDER BY DESCR
A18C2227	290-1129-00			CAP,FXD,ELCTLT:1000UF,+100%-10%,12V	56289	ORDER BY DESCR
A18C2228	290-1129-00			CAP,FXD,ELCTLT:1000UF,+100%-10%,12V	56289	ORDER BY DESCR
A18C2229	290-1128-00			CAP,FXD,ELCTLT:470UF,+100%,25V	56289	ORDER BY DESCR
A18C2230	290-1128-00			CAP,FXD,ELCTLT:470UF,+100%,25V	56289	ORDER BY DESCR
A18C2232	290-1130-00			CAP,FXD,ELCTLT:39UF,+100%-10%,150V	56289	ORDER BY DESCR
A18C2233	290-1130-00			CAP,FXD,ELCTLT:39UF,+100%-10%,150V	56289	ORDER BY DESCR
A18C2234	290-1128-00			CAP,FXD,ELCTLT:470UF,+100%,25V	56289	ORDER BY DESCR
A18C2236	290-1128-00			CAP,FXD,ELCTLT:470UF,+100%,25V	56289	ORDER BY DESCR
A18C2238	290-1144-00			CAP,FXD,ELCTLT:4.7UF,20%,100V	80009	290-1144-00
A18C2239	281-0775-01			CAP,FXD,CER DI:0.1UF,20%,50V	04222	SA105E104MAA
A18C2243	281-0770-00			CAP,FXD,CER DI:1000PF,20%,100V	04222	MA101C102MAA
A18C2244	285-1184-01			CAP,FXD,MTLZD:0.01UF,20%,4KV	56289	430P103X040
A18C2245	285-1184-01			CAP,FXD,MTLZD:0.01UF,20%,4KV	56289	430P103X040
A18C2248	290-1151-00			CAP,FXD,ELCTLT:100UF,20%,63V	55680	VEB1J101MRA
A18C2249	281-0773-00			CAP,FXD,CER DI:0.01UF,10%,100V	04222	MA201C103KAA
A18CR2201	152-0661-01			SEMICOND DVC,DI:RECT,SI,600V,3A	04713	S.R.3523-1RL
A18CR2202	152-0400-00			SEMICOND DVC,DI:RECT,SI,400V,1A	04713	SR1977K
A18CR2204	152-0400-00			SEMICOND DVC,DI:RECT,SI,400V,1A	04713	SR1977K
A18CR2205	152-0400-00			SEMICOND DVC,DI:RECT,SI,400V,1A	04713	SR1977K
A18CR2206	152-0582-00			SEMICOND DVC,DI:RECT,SI,20V,3A	80009	152-0582-00
A18CR2207	152-0582-00			SEMICOND DVC,DI:RECT,SI,20V,3A	80009	152-0582-00
A18CR2208	152-0400-00			SEMICOND DVC,DI:RECT,SI,400V,1A	04713	SR1977K
A18CR2209	152-0400-00			SEMICOND DVC,DI:RECT,SI,400V,1A	04713	SR1977K
A18CR2210	152-0400-00			SEMICOND DVC,DI:RECT,SI,400V,1A	04713	SR1977K
A18CR2211	152-0400-00			SEMICOND DVC,DI:RECT,SI,400V,1A	04713	SR1977K
A18CR2212	152-0400-00			SEMICOND DVC,DI:RECT,SI,400V,1A	04713	SR1977K
A18CR2213	152-0400-00			SEMICOND DVC,DI:RECT,SI,400V,1A	04713	SR1977K
A18CR2214	152-0400-00			SEMICOND DVC,DI:RECT,SI,400V,1A	04713	SR1977K
A18CR2215	152-0400-00			SEMICOND DVC,DI:RECT,SI,400V,1A	04713	SR1977K
A18CR2216	152-0400-00			SEMICOND DVC,DI:RECT,SI,400V,1A	04713	SR1977K
A18CR2218	152-0400-00			SEMICOND DVC,DI:RECT,SI,400V,1A	04713	SR1977K
A18CR2219	152-0581-00			SEMICOND DVC,DI:RECT,SI,20V,1A,A59	04713	1N5817
A18CR2220	152-0581-00			SEMICOND DVC,DI:RECT,SI,20V,1A,A59	04713	1N5817

http://www.tekscope.com

Component No.	Tektronix Part No.	Serial/Assembly No. Effective	Dscont	Name & Description	Mfr. Code	Mfr. Part No.
A18CR2227	152-0400-00			SEMICOND DVC,DI:RECT,SI,400V,1A	04713	SR1977K
A18CR2228	152-0400-00			SEMICOND DVC,DI:RECT,SI,400V,1A	04713	SR1977K
A18CR2231	152-0040-00			SEMICOND DVC,DI:RECT,SI,600V,1A,DO-41	80009	152-0040-00
A18CR2232	152-0040-00			SEMICOND DVC,DI:RECT,SI,600V,1A,DO-41	80009	152-0040-00
A18CR2233	152-0040-00			SEMICOND DVC,DI:RECT,SI,600V,1A,DO-41	80009	152-0040-00
A18CR2234	152-0040-00			SEMICOND DVC,DI:RECT,SI,600V,1A,DO-41	80009	152-0040-00
A18CR2235	152-0400-00			SEMICOND DVC,DI:RECT,SI,400V,1A	04713	SR1977K
A18CR2236	152-0400-00			SEMICOND DVC,DI:RECT,SI,400V,1A	04713	SR1977K
A18CR2237	152-0141-02			SEMICOND DVC,DI:SW,SI,30V,150MA,30V,DO-35	03508	DA2527 (1N4152)
A18DS2201	150-0035-00			LAMP,GLOW:90V MAX,0.3MA,AID-T,WIRE LD	TK0213	JH005/3011JA
A18J2208	131-3645-00			CONN,RCPT,ELEC:3 POSITION,0.01 SPACING	80009	131-3645-00
A18J2225	131-3486-00			CONN,RCPT,ELEC:HEADER,RTANG,2 POS,0.1 SP	00779	640452-2
A18L2201	108-1324-00			COIL,RF:FXD,33UH,POWER	54583	OL1338-330K5RO
A18L2202	108-1319-00			INDUCTOR,FIXED:33UH,10%,1.8A	54583	TSL1110-330K 1R8
A18L2203	108-1319-00			INDUCTOR,FIXED:33UH,10%,1.8A	54583	TSL1110-330K 1R8
A18L2204	108-1319-00			INDUCTOR,FIXED:33UH,10%,1.8A	54583	TSL1110-330K 1R8
A18L2205	108-1319-00			INDUCTOR,FIXED:33UH,10%,1.8A	54583	TSL1110-330K 1R8
A18L2206	108-1396-00			INDUCTOR,FIXED:150UH,0.82A	TK2058	TSL1110-151KR82
A18L2207	108-1357-00			COIL,RF:FXD,POWER	TK1441	86-343-2
A18L2208	108-1357-00			COIL,RF:FXD,POWER	TK1441	86-343-2
A18P2204	131-3637-00			CONN,RCPT,ELEC:HEADER,13 CIRCUIT,0.156 SP	80009	131-3637-00
A18Q2201	151-1214-00			TRANSISTOR:MOSFET,SI,TO-220	80009	151-1214-00
A18Q2202	151-0190-00			TRANSISTOR:NPN,SI,TO-92	80009	151-0190-00
A18Q2203	151-0188-00			TRANSISTOR:PNP,SI,TO-92	80009	151-0188-00
A18Q2204	151-0190-00			TRANSISTOR:NPN,SI,TO-92	80009	151-0190-00
A18Q2206	151-0565-00			THYRISTOR,SCR:8A,200V,SENS GATE,TO-220	80009	151-0565-00
A18Q2208	151-0190-00			TRANSISTOR:NPN,SI,TO-92	80009	151-0190-00
A18Q2209	151-0852-00			TRANSISTOR:	80009	151-0852-00
A18Q2210	151-0852-00			TRANSISTOR:	80009	151-0852-00
A18Q2211	151-0188-00			TRANSISTOR:PNP,SI,TO-92	80009	151-0188-00
A18Q2212	151-0276-01			TRANSISTOR:PNP,SI,TO-92	TK1016	S1423-TPE2
A18Q2213	151-0276-01			TRANSISTOR:PNP,SI,TO-92	TK1016	S1423-TPE2
A18Q2214	151-1197-00			TRANSISTOR:FET,MOS PWR,N-CHAN,TO-220	04713	IRF533WLEADFORM
A18R2201	308-0678-00			RES,FXD,WW:0.1 OHM,5%,2W	75042	BWH-R1000J
A18R2203	301-0184-00			RES,FXD,FILM:180K OHM,5%,0.5W	57668	TR50J-E180K
A18R2204	301-0184-00			RES,FXD,FILM:180K OHM,5%,0.5W	57668	TR50J-E180K
A18R2205	313-1104-00			RES,FXD,FILM:100K OHM,5%,0.2W	57668	TR20JE100K
A18R2206	313-1104-00			RES,FXD,FILM:100K OHM,5%,0.2W	57668	TR20JE100K
A18R2207	322-3164-00			RES,FXD,FILM:499 OHM,1%,0.2W,TC=T0	57668	CRB20 FXE 499E
A18R2208	313-1102-00			RES,FXD,FILM:1K OHM,5%,0.2W	57668	TR20JE01K0
A18R2209	313-1104-00			RES,FXD,FILM:100K OHM,5%,0.2W	57668	TR20JE100K
A18R2210	313-1513-00			RES,FXD,CMPSN:51K OHM,5%,0.2W	57668	TR20JE 51K
A18R2211	313-1332-00			RES,FXD,FILM:3.3K OHM,5%,0.2W	57668	TR20JE 03K3
A18R2212	313-1822-00			RES,FXD,FILM:8.2K,OHM,5%,0.2W	57668	TR20JE 08K2
A18R2215	313-1272-00			RES,FXD,FILM:2.7K OHM,5%,0.2W	57668	TR20JE 02K7
A18R2216	313-1102-00			RES,FXD,FILM:1K OHM,5%,0.2W	57668	TR20JE01K0
A18R2218	313-1102-00			RES,FXD,FILM:1K OHM,5%,0.2W	57668	TR20JE01K0
A18R2219	313-1105-00			RES,FXD,FILM:1M OHM,5%,0.2W	57668	TR20JE1M
A18R2220	313-1105-00			RES,FXD,FILM:1M OHM,5%,0.2W	57668	TR20JE1M
A18R2221	313-1203-00			RES,FXD,FILM:20K OHM,5%,0.2W	57668	TR20JE20K
A18R2222	313-1103-00			RES,FXD,FILM:10K OHM,5%,0.2W	57668	TR20JE10K0
A18R2223	313-1105-00			RES,FXD,FILM:1M OHM,5%,0.2W	57668	TR20JE1M
A18R2224	313-1101-00			RES,FXD,FILM:100 OHM,5%,0.2W	57668	TR20JE100E
A18R2225	313-1101-00			RES,FXD,FILM:100 OHM,5%,0.2W	57668	TR20JE100E
A18R2226	301-0274-00			RES,FXD,FILM:270K OHM,5%,0.5W	19701	5053CX270K0J
A18R2227	313-1102-00			RES,FXD,FILM:1K OHM,5%,0.2W	57668	TR20JE01K0
A18R2228	313-1102-00			RES,FXD,FILM:1K OHM,5%,0.2W	57668	TR20JE01K0
A18R2229	301-0823-00			RES,FXD,FILM:82K OHM,5%,0.5W	19701	5053CX82K00J

http://www.tek.com

Component No.	Tektronix Part No.	Serial/Assembly No. Effective	Dscont	Name & Description	Mfr. Code	Mfr. Part No.
A18R2230	301-0823-00			RES,FXD,FILM:82K OHM,5%,0.5W	19701	5053CX82K00J
A18R2231	315-0101-03			RES,FXD,CMPSN:100 OHM,5%,0.25W	01121	CB1015
A18R2232	313-1102-00			RES,FXD,FILM:1K OHM,5%,0.2W	57668	TR20JE01K0
A18R2233	313-1103-00			RES,FXD,FILM:10K OHM,5%,0.2W	57668	TR20JE10K0
A18R2236	313-1104-00			RES,FXD,FILM:100K OHM,5%,0.2W	57668	TR20JE100K
A18R2237	313-1105-00			RES,FXD,FILM:1M OHM,5%,0.2W	57668	TR20JE1M
A18R2238	313-1753-00			RES,FXD,FILM:75K OHM,5%,0.2W	57668	TR20JE 75K
A18R2239	313-1103-00			RES,FXD,FILM:10K OHM,5%,0.2W	57668	TR20JE10K0
A18R2240	313-1204-00			RES,FXD,FILM:200K,5%,0.2W	57668	TR20JE 200K
A18R2241	313-1103-00			RES,FXD,FILM:10K OHM,5%,0.2W	57668	TR20JE10K0
A18R2242	313-1027-00			RES,FXD,FILM:2.7 OHM,5%,0.2W	57668	TR20JE 02E7
A18R2243	313-1027-00			RES,FXD,FILM:2.7 OHM,5%,0.2W	57668	TR20JE 02E7
A18R2245	313-1103-00			RES,FXD,FILM:10K OHM,5%,0.2W	57668	TR20JE10K0
A18R2246	313-1513-00			RES,FXD,CMPSN:51K OHM,5%,0.2W	57668	TR20JE 51K
A18R2247	322-3289-00			RES,FXD,FILM:10K OHM,1%,0.2W,TC=T0	57668	CRB20 FXE 10K0
A18R2248	313-1513-00			RES,FXD,CMPSN:51K OHM,5%,0.2W	57668	TR20JE 51K
A18R2250	301-0106-00			RES,FXD,FILM:10M OHM,5%,0.50W	01121	EB1065
A18R2252	311-2270-00			RES,VAR,NONWW:TRMR,10K OHM,20%,0.5W	TK1450	GF06VT 10 K OHM
A18R2253	313-1101-00			RES,FXD,FILM:100 OHM,5%,0.2W	57668	TR20JE100E
A18R2254	313-1051-00			RES,FXD,FILM:5.1 OHM,5%,0.2W	57668	TR20JT68 05E1
A18R2255	313-1051-00			RES,FXD,FILM:5.1 OHM,5%,0.2W	57668	TR20JT68 05E1
A18R2256	301-0274-00			RES,FXD,FILM:270K OHM,5%,0.5W	19701	5053CX270K0J
A18R2257	301-0200-00			RES,FXD,FILM:20 OHM,5%,0.5W	19701	5053CX20R00J
A18R2259	315-0472-03			RES,FXD,CMPSN:4.7K OHM,5%,0.25W	01121	CB4725
A18R2260	301-0560-00			RES,FXD,FILM:56 OHM,5%,0.5W	19701	5053CX56R00J
A18R2265	313-1101-00			RES,FXD,FILM:100 OHM,5%,0.2W	57668	TR20JE100E
A18R2266	315-0472-03			RES,FXD,CMPSN:4.7K OHM,5%,0.25W	01121	CB4725
A18R2267	307-0113-00			RES,FXD,CMPSN:5.1 OHM,5%,0.25W	01121	CB51G5
A18R2268	313-1103-00			RES,FXD,FILM:10K OHM,5%,0.2W	57668	TR20JE10K0
A18R2270	313-1103-00			RES,FXD,FILM:10K OHM,5%,0.2W	57668	TR20JE10K0
A18R2271	313-1512-00			RES,FXD,FILM:5.1K OHM,5%,0.2W	57668	TR20JE 5K1
A18R2272	313-1051-00			RES,FXD,FILM:5.1 OHM,5%,0.2W	57668	TR20JT68 05E1
A18R2273	313-1051-00			RES,FXD,FILM:5.1 OHM,5%,0.2W	57668	TR20JT68 05E1
A18R2274	313-1103-00			RES,FXD,FILM:10K OHM,5%,0.2W	57668	TR20JE10K0
A18R2275	301-0432-00			RES,FXD,FILM:4.3K OHM,5%,0.5W	19701	5053CX4K300J
A18R2276	313-1102-00			RES,FXD,FILM:1K OHM,5%,0.2W	57668	TR20JE01K0
A18RT2201	307-0863-00			RES,THERMAL:10 OHM,10%,NTC	15454	SG-13S
A18S2201	260-2309-00			SWITCH,PUSH:DPST,4A,250VAC	31918	NE15CT112A
A18S2202	260-2318-00			SWITCH,THRMSTC:NC,105 DEG C OP,80 DEG CL	80009	260-2318-00
A18T2203	120-1686-00			TRANSFORMER,RF:COUPLED INDUCTOR	80009	120-1686-00
A18T2204	120-1685-00			XFMR,PWR,STU:HIGH VOLTAGE	80009	120-1685-00
A18T2205	120-1347-00			TRANSFORMER,RF:DRIVER SATURATING	54583	BDT-001
A18T2206	120-1401-00			XFMR,TRIGGER:LINE,1:1 TURNS RATIO	54937	DMI 500-2044
A18U2201	156-2395-00			MICROCKT,LINEAR:BIPOLAR,PWM PWR SPLY,CONT	01295	MC34060N
A18U2230	152-0926-00			SEMICOND DVC,DI:	80009	152-0926-00
A18VR2201	152-0255-00			SEMICOND DVC,DI:ZEN,SI,51V,5%,0.4W,DO-7	04713	SZG35009K7
A18VR2202	152-0166-00			SEMICOND DVC,DI:ZEN,SI,6.2V,5%,400MW,DO-7	04713	SZ11738RL
A18VR2203	152-0304-00			SEMICOND DVC,DI:ZEN,SI,20V,5%,0.4W,DO-7	15238	Z5411
A18VR2204	307-0456-00			RES,V SENSITIVE:250VAC,20W,METAL OXIDE	03508	MOV-V250LA15A
A18VR2205	152-0166-00			SEMICOND DVC,DI:ZEN,SI,6.2V,5%,400MW,DO-7	04713	SZ11738RL
A18VR2206	152-0282-00			SEMICOND DVC,DI:ZEN,SI,30V,2%,400MW	04713	SZG35009K13
A18VR2207	152-0304-00			SEMICOND DVC,DI:ZEN,SI,20V,5%,0.4W,DO-7	15238	Z5411
A18W28	196-3093-00			LEAD,ELECTRICAL:18 AWG,3.3 L,8-9	80009	196-3093-00
A18W29	196-3092-00			LEAD,ELECTRICAL:18 AWG,3.3 L,8-0	80009	196-3092-00
A18W31	196-3094-00			LEAD,ELECTRICAL:26 AWG,2.6 L,9-N	80009	196-3094-00
A18W32	196-3094-00			LEAD,ELECTRICAL:26 AWG,2.6 L,9-N	80009	196-3094-00
A18W2201	131-0566-00			BUS,CONDUCTOR:DUMMY RES,0.094 OD X 0.225 L	24546	OMA 07

http://www.xiufu.com

Component No.	Tektronix Part No.	Serial/Assembly No. Effective	Dscont	Name & Description	Mfr. Code	Mfr. Part No.
B25	119-2063-00			FAN,TUBEAXIAL:12V,130MA,19.4 CFM	61529	A1F891003
DL21	119-2118-01			DELAY LINE,ELEC:	80009	119-2118-01
F2201	159-0023-00			FUSE,CARTRIDGE:3AG,2A,250V,SLOW BLOW	71400	MDX2
FL2201	119-2055-00			FILTER,RFI:3A,115-230V,48-440HZ	05245	3EF1F
J16	131-0955-00			CONN,RCPT,ELEC:BNC,FEMALE	13511	31-279
V1	154-0905-00			ELECTRON TUBE:CRT	80009	154-0905-00
W30	195-3990-00			LEAD,ELECTRICAL:18 AWG,4.5 L,5-4	80009	195-3990-00

http://www.ebaman.com

DIAGRAMS AND CIRCUIT BOARD ILLUSTRATIONS

Symbols

Graphic symbols and class designation letters are based on ANSI Standard Y32.2-1975.

Logic symbology is based on ANSI/IEEE 91-1984. Logic symbols depict the logic function performed and may differ from the manufacturer's data.

The overline on a signal name indicates that the signal performs its intended function when it is in the LO state.

Abbreviations are based on ANSI Y1.1-1972.

Other ANSI standards that are used in the preparation of diagrams by Tektronix, Inc., are:

Y14.15-1966	Drafting Practices.
Y14.2M-1979	Line Conventions and Lettering.
ANSI/IEEE 280-1985	Letter Symbols for Quantities Used in Electrical Science and Electrical Engineering.

American National Standards Institute
1430 Broadway
New York, New York 10018

Component Values

Electrical components shown on the diagrams are in the following units unless noted otherwise:

Capacitors	Values one or greater are in picofarads (pF). Values less than one are in microfarads (μF).
Resistors	Ohms (Ω).

The information and special symbols below may appear in this manual.

Assembly Numbers and Grid Coordinates

Each assembly in the instrument is assigned an assembly number (e.g., A20). The assembly number appears on the circuit board outline on the diagram, in the title for the circuit board component location illustration, and in the lookup table for the schematic diagram and corresponding component locator illustration. The Replaceable Electrical Parts list is arranged by assemblies in numerical sequence; the components are listed by component number *(see following illustration for constructing a component number).

The schematic diagram and circuit board component location illustration have grids. A lookup table with the grid coordinates is provided for ease of locating the component. Only the components illustrated on the facing diagram are listed in the lookup table. When more than one schematic diagram is used to illustrate the circuitry on a circuit board, the circuit board illustration may only appear opposite the first diagram on which it was illustrated; the lookup table will list the diagram number of other diagrams that the circuitry of the circuit board appears on.

http://www.ebamar.com

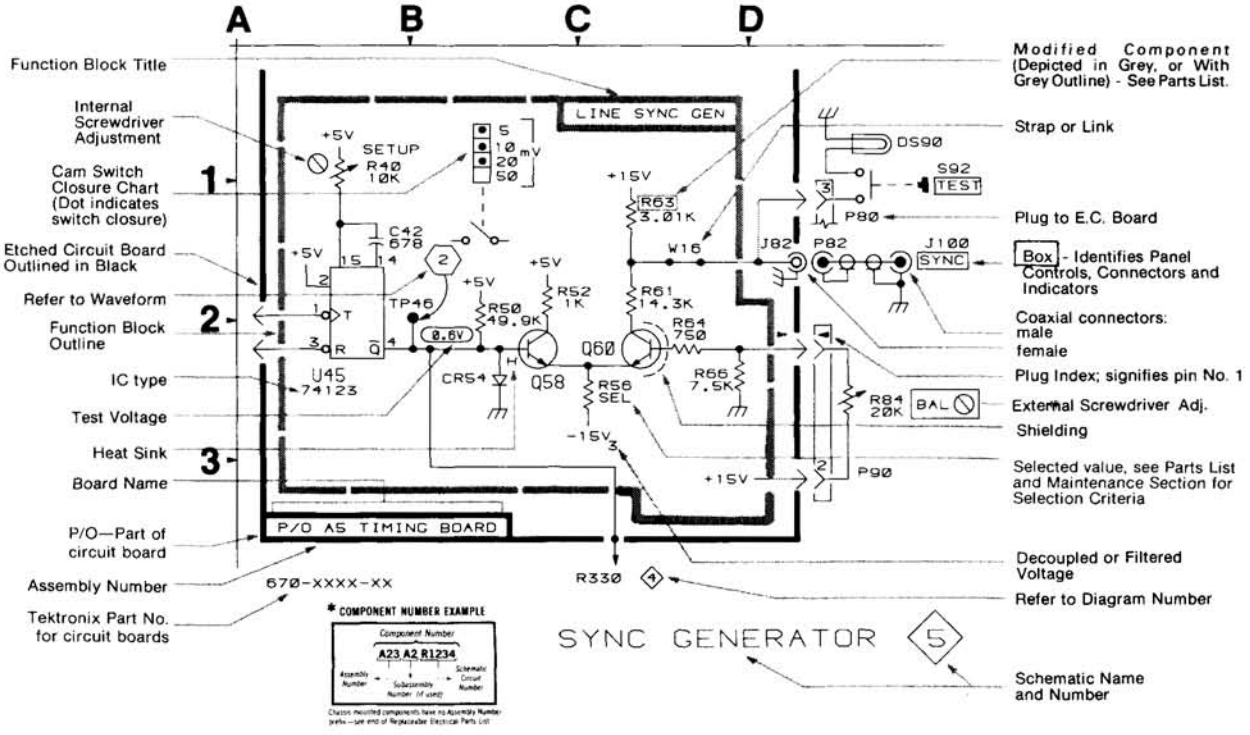

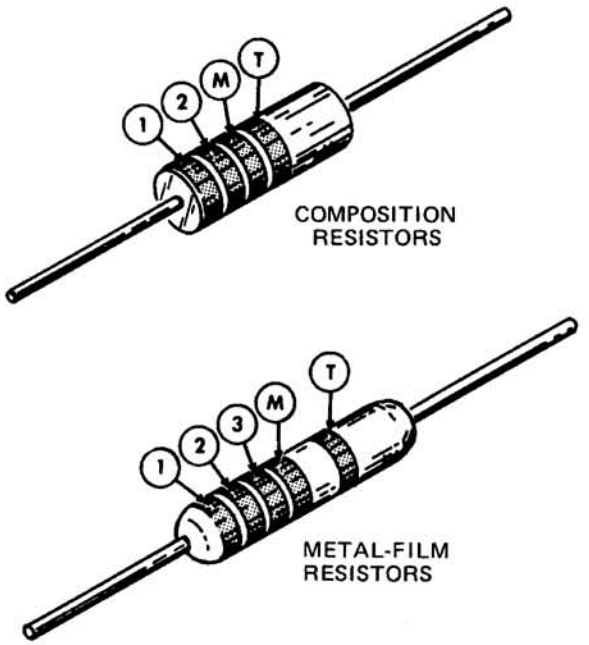

(1)(2) and (3) – 1st, 2nd, and 3rd significant figures

(M) –multiplier (T) –tolerance

http://www.ebaman.com

COLOR	SIGNIFICANT FIGURES	RESISTORS	
		MULTIPLIER	TOLERANCE
BLACK	0	1	---
BROWN	1	10	±1%
RED	2	10^2 or 100	±2%
ORANGE	3	10^3 or 1 K	±3%
YELLOW	4	10^4 or 10 K	±4%
GREEN	5	10^5 or 100 K	±½%
BLUE	6	10^6 or 1 M	±¼%
VIOLET	7	---	±1/10%
GRAY	8	---	---
WHITE	9	---	---
GOLD	–	10^{-1} or 0.1	±5%
SILVER	–	10^{-2} or 0.01	±10%
NONE	–	---	±20%

(1861-20A)6557-87

Figure 9-1. Color codes for resistors.

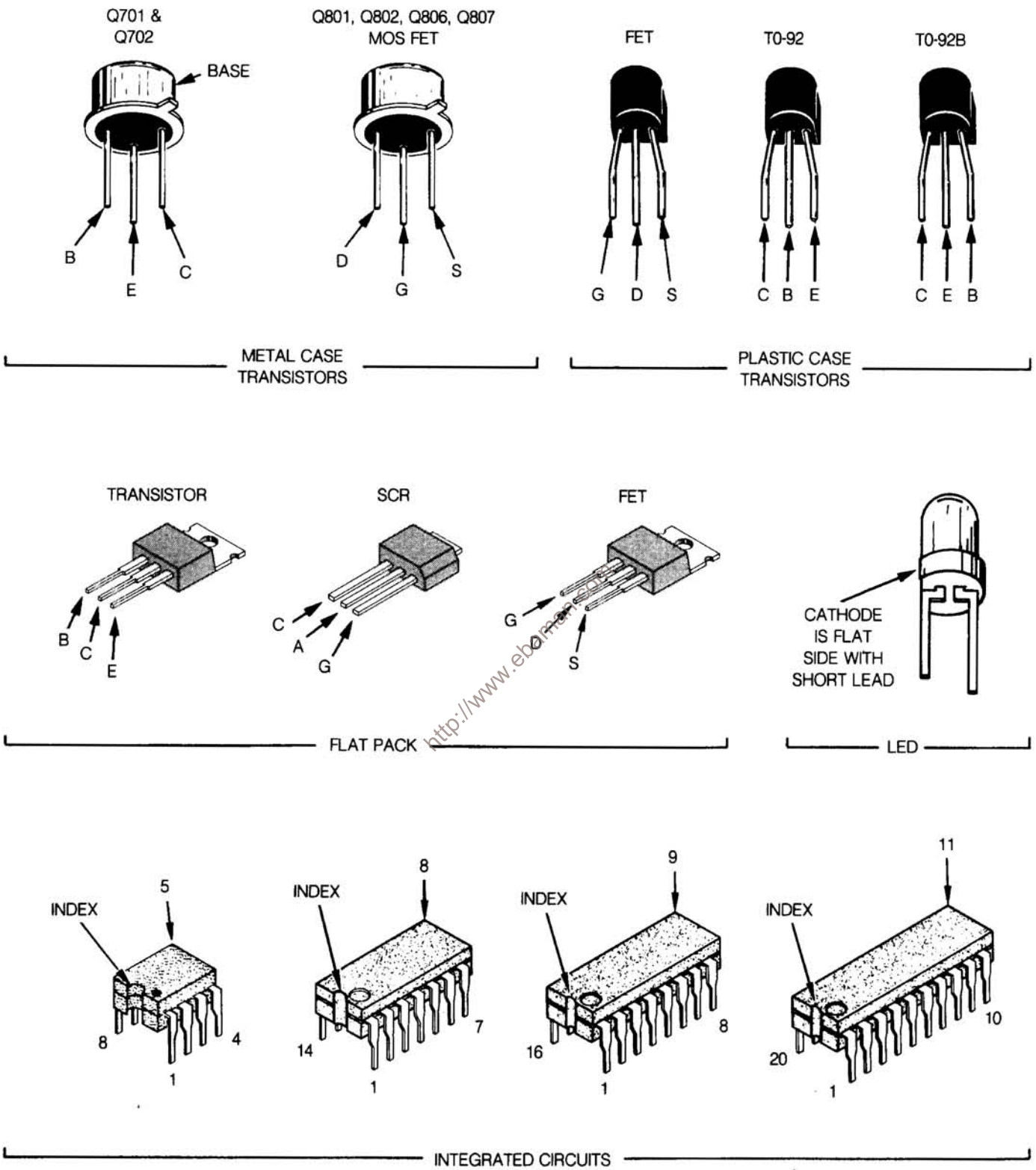

http://www.ebmanuals.com

LEAD CONFIGURATIONS AND CASE STYLES ARE TYPICAL, BUT MAY VARY DUE TO VENDOR CHANGES OR INSTRUMENT MODIFICATIONS.

6081-20

Figure 9-2. Semiconductor lead configurations.

To identify any component mounted on a circuit board and to locate that component in the schematic diagram.

1. Locate the Circuit Board Illustration.
   a. Identify the Assembly Number of the circuit board that the component is on by using the Circuit Board location illustration in this section or the mechanical parts exploded views at the rear of this manual.
   b. In the manual, locate the tabbed foldout page that corresponds with the Assembly Number of the circuit board. The circuit board assembly numbers and names are printed on the back side of the tabs (facing the rear of the manual).
2. Determine the Circuit Number and Schematic Diagram.
   a. Compare the circuit board with its illustration. Locate the component you are looking for by area and shape on the illustration to determine its Circuit Number.
   b. Scan the lookup table next to the Circuit Board illustration to find the Circuit Number of the component.
   c. Read the SCHEM NUMBER column next to the component's circuit number to find the Schematic Diagram number.
3. Locate the Component on the Schematic Diagram.
   a. Locate the tabbed page that corresponds to the Schematic Diagram number. Schematic diagram numbers and names are printed on the front side of the tabs (facing the front of the manual).
   b. Locate the Assembly Number in the Component Location lookup table next to the schematic diagram. Scan the CIRCUIT NUMBER column of that table to find the Circuit Number of the component you are looking for in the schematic.
   c. In the SCHEM LOCATION column next to the component, read the grid coordinates of the component in the schematic.
   d. Using the grid coordinates given, find the component in the schematic diagram.

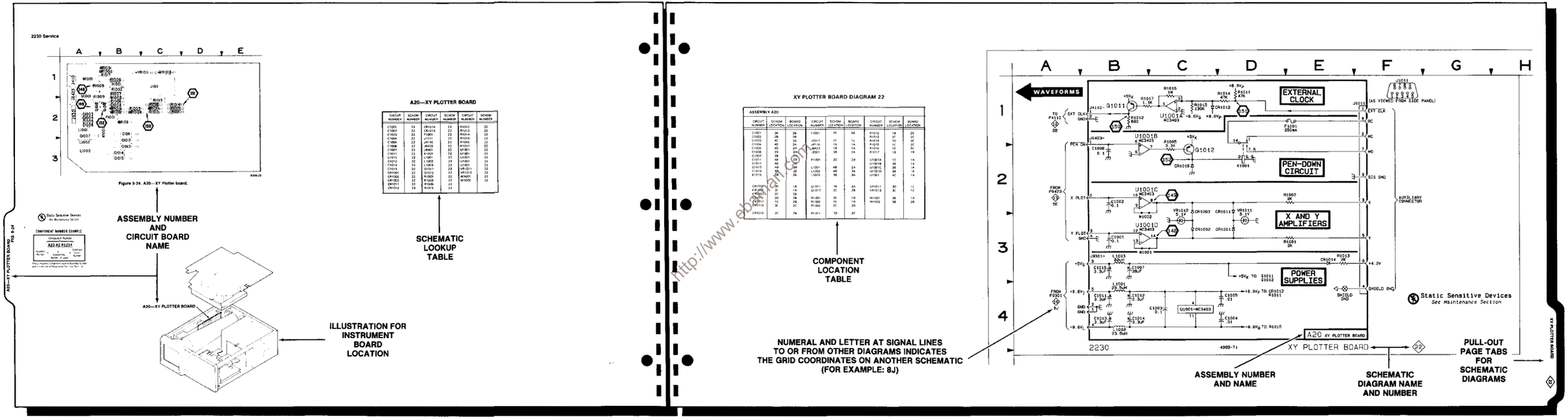

To identify any component in a schematic diagram and to locate that component on its respective circuit board.

1. Determine the Circuit Board Illustration and Component Location.
   a. From the schematic diagram, determine the Assembly Number of the circuit board that the component is on. The Assembly Number and Name is boxed and located in a corner of the heavy line marking the circuit board outline in the schematic diagram.
   b. Find the Component Location table for the Assembly Number found on the schematic. Scan the CIRCUIT NUMBER column to find the Circuit Number of the component.
   c. Look in the BOARD LOCATION column next to the component number and read its circuit board grid coordinates.
2. Locate the Component on the Circuit Board.
   a. In the manual, locate the tabbed page that corresponds to Assembly Number the component is on. Assembly numbers and names for circuit boards are on the back side of the tabs.
   b. Using the Circuit Number of the component and its given grid location, find the component in the Circuit Board illustration.
   c. From the small circuit board location illustration shown next to the circuit board, find the circuit board's location in the instrument.
   d. Find the circuit board in the instrument. Compare it with the circuit board illustration in the manual to locate the component on the circuit board itself.

6531-08

Figure 9-3. Locating components on schematic diagrams and circuit board illustrations.

http://www.ebay.com/

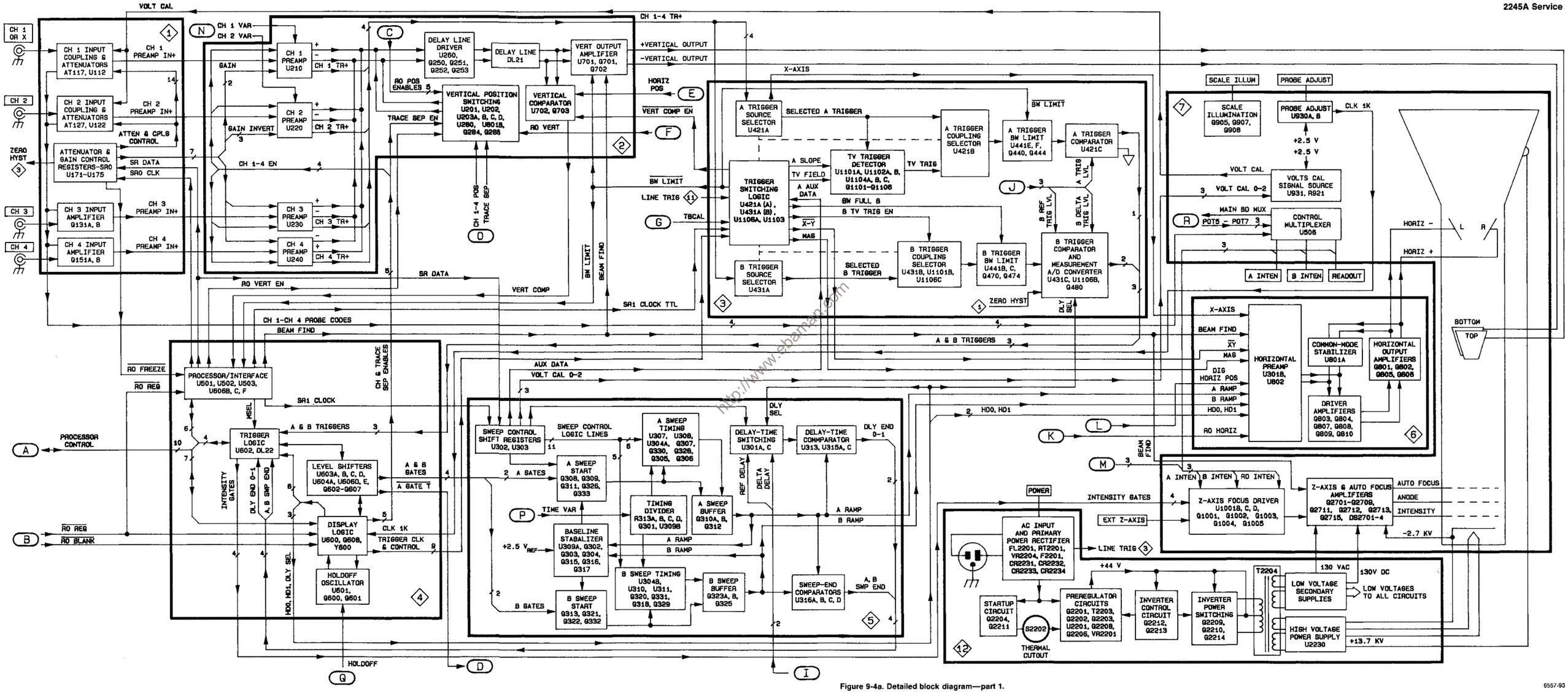

http://www.ebanman.com

Figure 9-4a. Detailed block diagram—part 1.

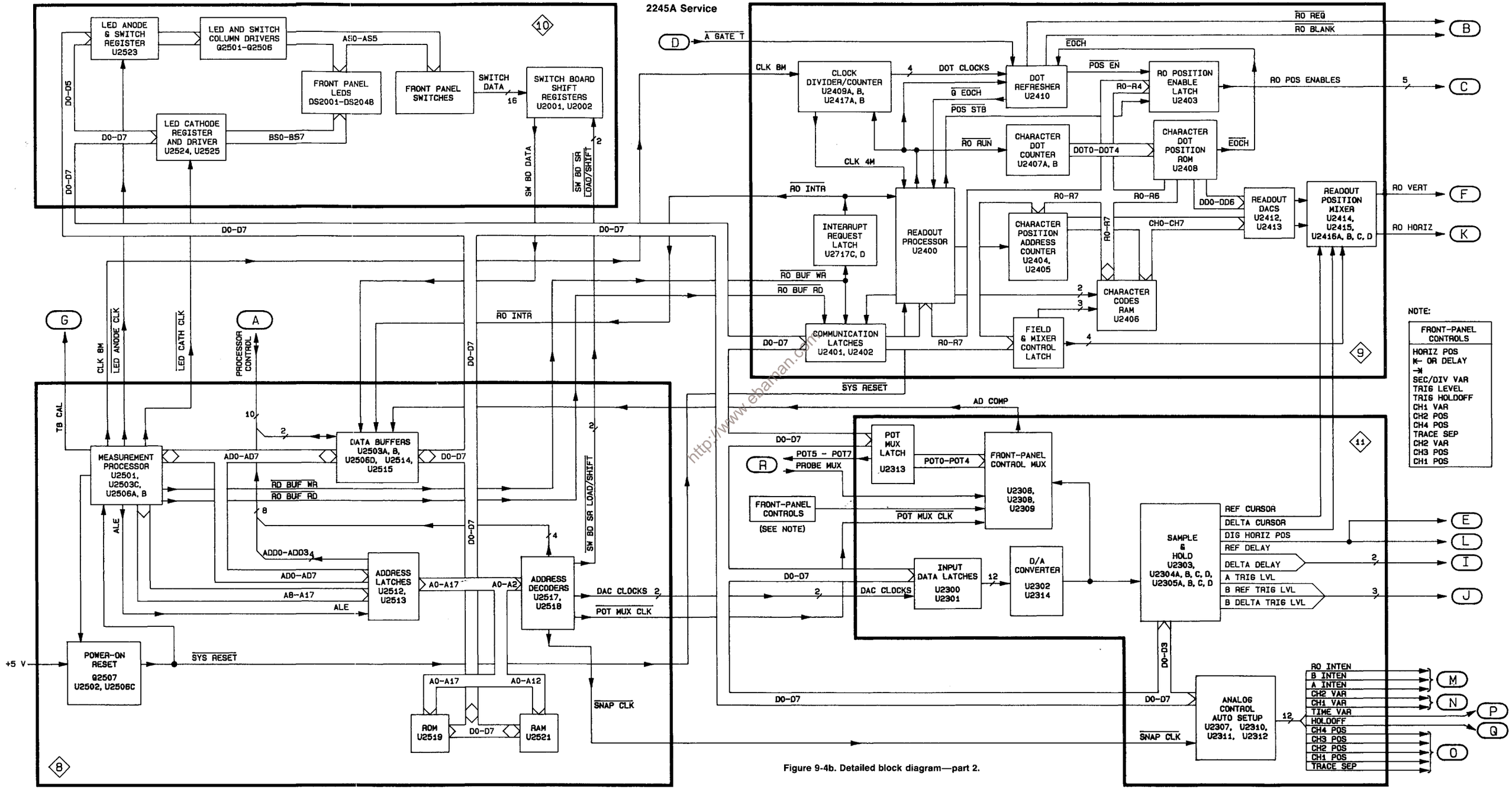

http://www.ebaman.com

Figure 9-4b. Detailed block diagram—part 2.

Table 9-1
SIGNAL LINE LOCATIONS

SIGNAL NAME	ORIGINATES[a] DIAG/CIR#(VIA)	GOES TO DIAG/CIR#(VIA)
A GATE	4/U603-11	5/VR302
$\overline{\text{A GATE}}$	4/U603-14	5/VR301
$\overline{\text{A GATE T}}$	4/Q604	9/U2410-9
A INTEN	11/U2312-14(R2357)	7/U1001-12
$\overline{\text{A INTEN GATE}}$	4/U602-17	7/Q1001
A RAMP	5/Q312,Q328	6/U802-3
A SLOPE	4/U600-30	3/U421-8(R493)
A SWP END	5/U316-15(R378)	4/U602-8
A TRIG	3/U421-10(R411)	4/U602-7
A TRIG LVL	11/U2304-8	3/U421-24(R448)
AD COMP	11/U2306-7	8/U2515-12(R2511)
ADDR0	8/U2512-15(R2560)	4/U501-1,U602-38(R619),U600-4
ADDR1	8/U2512-6(R2561)	4/U501-2,U602-39(R618),U600-5
ADDR2	8/U2512-16(R2562)	4/U501-3,U600-6
ADDR3	8/U2512-5(R2563)	4/U502-10,U600-7
ATS 0	4/U600-31	3/U421-13(R490)
ATS 1	4/U600-32	3/U421-12(R491)
ATS 2	4/U600-33	3/U421-9(R492)
AUX DATA	5/U303-9	3/U1103-2(R1162)
B DELTA TRIG LVL	11/U2305-1	3/U1106-5
B GATE	4/U603-9	5/VR304
$\overline{\text{B GATE}}$	4/U603-15	5/VR303
B INTEN	11/U2312-4(R2356)	7/U1001-5
$\overline{\text{B INTEN GATE}}$	4/U602-18	7/Q1004
B RAMP	5/Q325,Q329	6/U802-5
B REF TRIG LVL	11/U2304-7	3/U1106-3
B SLOPE	4/U600-26	3/U431-8(R497)
B SWP END	5/U316-2(R380)	4/U602-37
B TRIG	3/U431-10(R415)	4/U602-34(DL22+)
$\overline{\text{B TRIG}}$	3/U431-11(R416)	4/DL22-
BEAM FIND	4/U503-7	7/Q2706(R2705);2/U701-21;6/U802-14
BTS 0	4/U600-27	3/U431-13 (R494)
BTS 1	4/U600-28	3/U431-12(R495)
BTS 2	4/U600-29	3/U431-9(R496)
$\overline{\text{BW LIMIT}}$	3/U1103-11	4/U502-4;2/U701-22;3/U441-11, U441-13
CH 1 EN	4/U600-39	2/U210-11(R213)
CH 1 POS	11/U2310-14(R2354)	2/U203-3
CH 1 PRB	1/R105	7/U506-15
CH 1 PREAMP 0	1/U172-4	2/U210-1(CR201)
CH 1 PREAMP 1	1/U171-11	2/U210-2(CR202)
CH 1 PREAMP IN +	1/U112-8	2/U210-7
CH 1 TR +	2/U210-20	3/U421-7,U431-7
CH 1 VAR	11/U2309-13(R2350)	2/U210-10(R225)
CH 2 EN	4/U600-38	2/U220-11 (R223)
CH 2 INVERT	1/U173-6	2/U220-12
CH 2 POS	11/U2310-4(R2353)	2/U203-5

Table 9-1 (cont)

SIGNAL NAME	ORIGINATES[a] DIAG/CIR#(VIA)	GOES TO DIAG/CIR#(VIA)
CH 2 PRB	1/R106,C121	7/U506-12
CH 2 PREAMP 0	1/U173-5	2/U220-1
CH 2 PREAMP 1	1/U173-4	2/U220-2
CH 2 PREAMP IN +	1/U122-8	2/U220-7
CH 2 TR +	2/U220-20	3/U421-5,U431-5
CH 2 VAR	11/U2309-5(R2351)	2/U220-10(R227)
CH 3 EN	4/U600-37	2/U230-11(R233)
CH 3 POS	11/U2311-4(R2327)	2/U203-10
CH 3 PRB	1/R107,C131	7/U506-1
CH 3 PREAMP 1	1/U173-7	2/U230-2
CH 3 PREAMP IN +	1/Q131A(R139),Q131B(R139)	2/U230-7
CH 3 TR +	2/U230-20	3/U421-3,U431-3
CH 4 EN	4/U600-36	2/U240-11(R243)
CH 4 POS	11/U2310-15(R2326)	2/U203-12
CH 4 PRB	1/R108,C151	7/U506-5
CH 4 PREAMP 1	1/U173-14	2/U240-2
CH 4 PREAMP IN +	1/Q151A(R159),Q151B(R159)	2/U240-7
CH 4 TR +	2/U240-20	3/U421-1,U431-1
CLK 1K	7/U930-7(R933,R934)	4/U600-2
CLK 4M	9/U2417-3	11/J2601-16
CLK 8M	8/U2501-56	9/U2409-1
$\overline{\text{DAC INTR}}$	11/R2310	8/U2515-16(R2554)
$\overline{\text{DAC LSB CLK}}$	8/U2517-15	11/U2301-11
$\overline{\text{DAC MSB CLK}}$	8/U2517-14	11/U2300-11
DATA BUS	8/U2514	9/U2401,U2402;10/U2523,U2524; 11/U2300,U2301,U2307,U2313
DELTA CURSOR	11/U2304-1	9/U2414-2,U2415-2
DELTA DELAY	11/U2305-7	5/U301-12(R330),U313-6(R330)
DIG HORIZ POS	11/U2305-14	6/U301-3(R369);2/U702-3(R722)
DLY END 0	5/U315-15(R388)	4/U602-36
DLY END 1	5/U315-2(R387)	4/U602-35
DLY SEL	4/U600-25	5/U301-11;3/U1106-9
$\overline{\text{FLIC WR}}$	8/U2518-11	4/U602-40(R647)
HD0	4/U600-24	6/U802-8
HD1	4/U600-23	6/U802-11
HOLDOFF	11/U2308-5(R2343)	4/Q600(R636)
+ HORIZONTAL OUTPUT	5/Q805(R819),Q806(R819)	7/V1-R
- HORIZONTAL OUTPUT	5/Q801(R802),Q802(R802)	7/V1-L
$\overline{\text{IZ INTEN GATE}}$	4/U602-19	7/Q1003
$\overline{\text{LED ANODE CLK}}$	8/U2501-27	10/U2523-11(R2528)
$\overline{\text{LED CATH CLK}}$	8/U2501-25	10/U2524-11(R2529)
LINE TRIG	12/T2206	3/U1106-2
MAG	3/U1103-6	6/U802-6
MAIN BD MUX	7/U506-3(R503)	11/U2309-12(R2352)
$\overline{\text{MB CNTL WR}}$	8/U2518-15(R2564)	4/U501-4
MB DATA	8/U2515-11(R2555)	4/U600-9,U602-12,U502-2
MB RETURN	4/U502-12	8/U2515-14(R2509)
POT5	11/U2313-5	7/U506-11(R508)
POT6	11/U2313-19	7/U506-10(R510)
POT7	11/U2313-2	7/U506-9(R512)

http://www.ebaman.com

Table 9-1 (cont)

SIGNAL NAME	ORIGINATES[a] DIAG/CIR#(VIA)	GOES TO DIAG/CIR#(VIA)
CH 2 PRB	1/R106,C121	7/U506-12
CH 2 PREAMP 0	1/U173-5	2/U220-1
CH 2 PREAMP 1	1/U173-4	2/U220-2
CH 2 PREAMP IN +	1/U122-8	2/U220-7
CH 2 TR +	2/U220-20	3/U421-5,U431-5
CH 2 VAR	11/U2309-5(R2351)	2/U220-10(R227)
CH 3 EN	4/U600-37	2/U230-11(R233)
CH 3 POS	11/U2311-4(R2327)	2/U203-10
CH 3 PRB	1/R107,C131	7/U506-1
CH 3 PREAMP 1	1/U173-7	2/U230-2
CH 3 PREAMP IN +	1/Q131A(R139),Q131B(R139)	2/U230-7
CH 3 TR +	2/U230-20	3/U421-3,U431-3
CH 4 EN	4/U600-36	2/U240-11(R243)
CH 4 POS	11/U2310-15(R2326)	2/U203-12
CH 4 PRB	1/R108,C151	7/U506-5
CH 4 PREAMP 1	1/U173-14	2/U240-2
CH 4 PREAMP IN +	1/Q151A(R159),Q151B(R159)	2/U240-7
CH 4 TR +	2/U240-20	3/U421-1,U431-1
CLK 1K	7/U930-7(R933,R934)	4/U600-2
CLK 4M	9/U2417-3	11/J2601-16
CLK 8M	8/U2501-56	9/U2409-1
$\overline{\text{DAC INTR}}$	11/R2310	8/U2515-16(R2554)
$\overline{\text{DAC LSB CLK}}$	8/U2517-15	11/U2301-11
$\overline{\text{DAC MSB CLK}}$	8/U2517-14	11/U2300-11
DATA BUS	8/U2514	9/U2401,U2402;10/U2523,U2524; 11/U2300,U2301,U2307,U2313
DELTA CURSOR	11/U2304-1	9/U2414-2,U2415-2
DELTA DELAY	11/U2305-7	5/U301-12(R330),U313-6(R330)
DIG HORIZ POS	11/U2305-14	6/U301-3(R369);2/U702-3(R722)
DLY END 0	5/U315-15(R388)	4/U602-36
DLY END 1	5/U315-2(R387)	4/U602-35
DLY SEL	4/U600-25	5/U301-11;3/U1106-9
$\overline{\text{FLIC WR}}$	8/U2518-11	4/U602-40(R647)
HD0	4/U600-24	6/U802-8
HD1	4/U600-23	6/U802-11
HOLDOFF	11/U2308-5(R2343)	4/Q600(R636)
+ HORIZONTAL OUTPUT	5/Q805(R819),Q806(R819)	7/V1-R
- HORIZONTAL OUTPUT	5/Q801(R802),Q802(R802)	7/V1-L
$\overline{\text{IZ INTEN GATE}}$	4/U602-19	7/Q1003
$\overline{\text{LED ANODE CLK}}$	8/U2501-27	10/U2523-11(R2528)
$\overline{\text{LED CATH CLK}}$	8/U2501-25	10/U2524-11(R2529)
LINE TRIG	12/T2206	3/U1106-2
MAG	3/U1103-6	6/U802-6
MAIN BD MUX	7/U506-3(R503)	11/U2309-12(R2352)
$\overline{\text{MB CNTL WR}}$	8/U2518-15(R2564)	4/U501-4
MB DATA	8/U2515-11(R2555)	4/U600-9,U602-12,U502-2
MB RETURN	4/U502-12	8/U2515-14(R2509)
POT5	11/U2313-5	7/U506-11(R508)
POT6	11/U2313-19	7/U506-10(R510)
POT7	11/U2313-2	7/U506-9(R512)

http://www.ebaman.com

Table 9-1 (cont)

SIGNAL NAME	ORIGINATES[a] DIAG/CIR#(VIA)	GOES TO DIAG/CIR#(VIA)
$\overline{\text{POT MUX CLK}}$	8/U2517-13	11/U2313-11
REF CURSOR	11/U2304-14	9/U2414-5,U2415-5
REF DELAY	11/U2305-8	5/U301-13(R329)
$\overline{\text{RO BLANK}}$	9/U2410-16(R2419)	4/U600-12
$\overline{\text{RO BUF RD}}$	8/U2501-29(R2515)	9/U2402-1
$\overline{\text{RO BUF WR}}$	8/U2501-28(R2516)	9/U2417-9,U2401-11
RO CH 1 POS EN	9/U2403-19	2/U202-10
RO CH 2 POS EN	9/U2403-2	2/U202-11
RO CH 3 POS EN	9/U2403-5	2/U201-9
RO CH 4 POS EN	9/U2403-6	2/U201-10
$\overline{\text{RO FREEZE}}$	1/U173-11	4/U502-5,U503-3
RO HORIZ	9/U2416-8	6/U802-1
RO INTEN	11/U2312-15(R2355)	7/U1001-10
$\overline{\text{RO INTEN GATE}}$	4/U602-20	7/Q1002
$\overline{\text{RO INTR}}$	9/U2417-11	8/U2515-15(R2508)
$\overline{\text{RO REQ}}$	9/U2410-14(R2420)	4/U503-2,U600-11
RO TR SEP EN	9/U2403-9	2/U201-11
RO VERT	9/U2416-14	2/U202-4(R207,R205)
RO VERT EN	4/U503-4	2/U202-9(R215)
$\overline{\text{SLIC RD}}$	8/U2503-8	4/U600-8
$\overline{\text{SLIC WR}}$	8/U2518-12	4/U600-3
$\overline{\text{SNAP CLK}}$	8/U2517-12	11/U2307-11
SR0 CLK	4/U606-12	1/U171-3,U172-3,Q171,U173-3(R176)
SR1 CLK	4/U606-4	5/U302-3,U303-3
SR1 CLK TTL	4/U501-13	3/U1103-3
SR DATA	4/U606-6	1/Q171B,U171-2;5/U302-2
SW BD DATA	10/U2002-9	8/U2515-16(R2510)
$\overline{\text{SW BD SR LOAD}}$	8/U2518-14	10/U2001-1,U2002-1
$\overline{\text{SW BD SR SHIFT}}$	8/U2518-13	10/U2001-2,U2002-2
$\overline{\text{SYS RESET}}$	8/U2506-8	9/U2400-28
TB CAL	8/U2501-22	3/U1106-1(R1170)
TIME VAR	11/U2308-12(R2344)	5/U309-5(R309,CR301)
TRACE SEP	11/U2311-15(R2323)	2/U801-5
TRACE SEP EN	4/U600-22	2/U201-11(R209)
$\overline{\text{TRIG CLK}}$	4/U600-19	3/U421-2(R498)
VERT COMP	2/U702-7	4/U502-6
$\overline{\text{VERT COMP EN}}$	3/U1103-7	2/Q703
+ VERTICAL OUTPUT	2/Q701(R731)	7/V1-TOP
- VERTICAL OUTPUT	2/Q702(R732)	7/V1-BOT
VOLT CAL	7/U931-3	1/R114,R124
VOLT CAL 0	5/U303-11	7/U931-11(R924)
VOLT CAL 1	5/U303-12	7/U931-10(R923)
VOLT CAL 2	5/U303-13	7/U931-9(R922)
$\overline{\text{X Y}}$	3/U1103-12	6/U301-9
X AXIS	3/U421-19(R426,L426)	6/U802-7(R836,R827)
ZERO HYST	1/U173-13	3/Q480(R484)

[a] Signals that begin and end on the same diagram are not listed in this table.

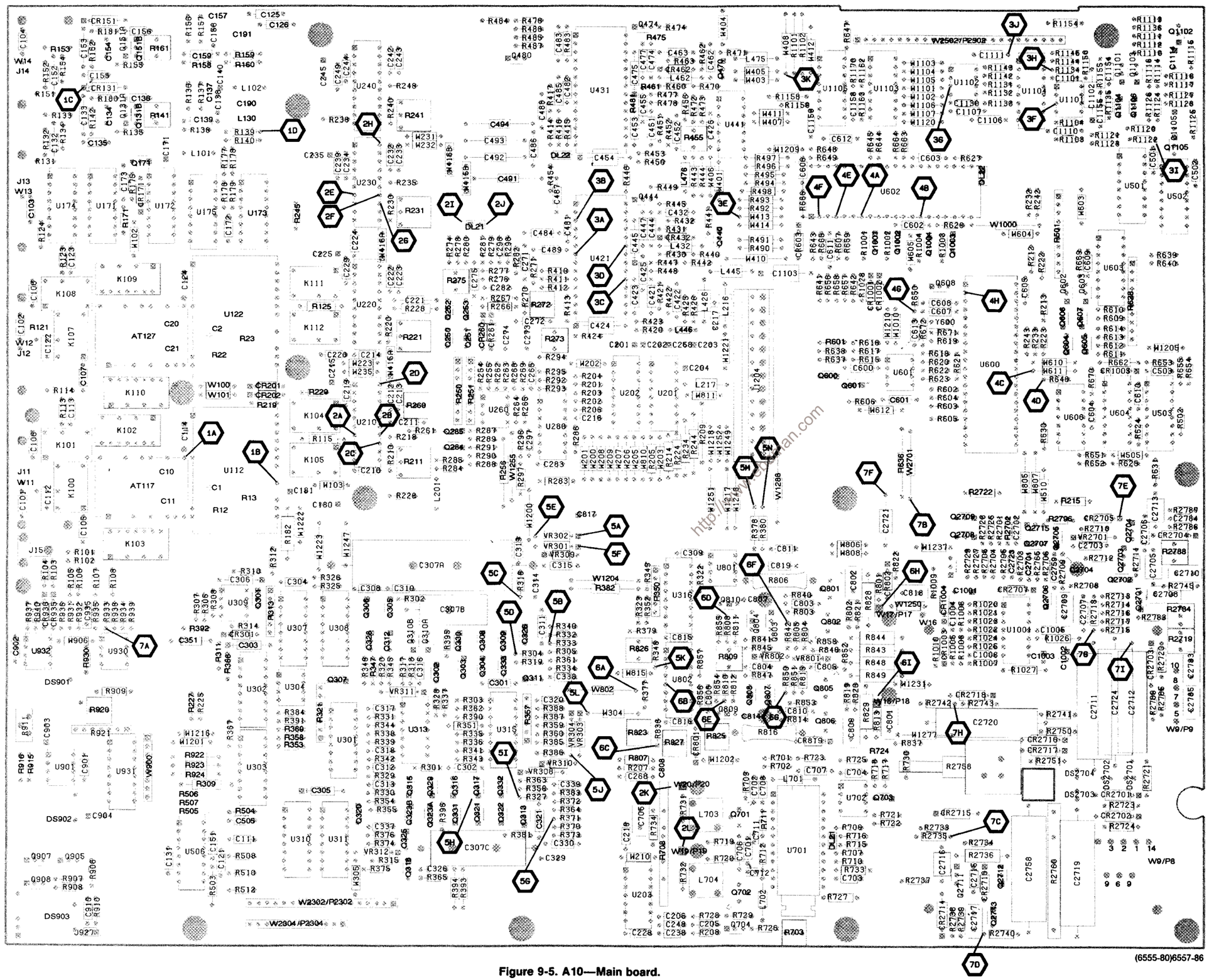
A
B
C
D
E
F
G
H
J
K
L
M
N
1
2
3
4
5
6
7
8
9
10
W2302/P2302
W2304/P2304
W2502/P2502
W2701/P2701
W9/P9
W9/P8
W16/P18
W20/P20
W25627/P2902
DS901
DS902
DS903
AT127
AT117
U602
U122
U112
U421
U431
U441
U501
U502
U503
U601
U701
U801
U1103
U1108
U1110
U1111
U1112
U1113
U1114
U1115
U1116
U1117
U1118
U1119
U1120
U1121
U1122
U1123
U1124
U1125
U1126
U1127
U1128
U1129
U1130
U1131
U1132
U1133
U1134
U1135
U1136
U1137
U1138
U1139
U1140
U1141
U1142
U1143
U1144
U1145
U1146
U1147
U1148
U1149

WAVEFORMS FOR DIAGRAM 1

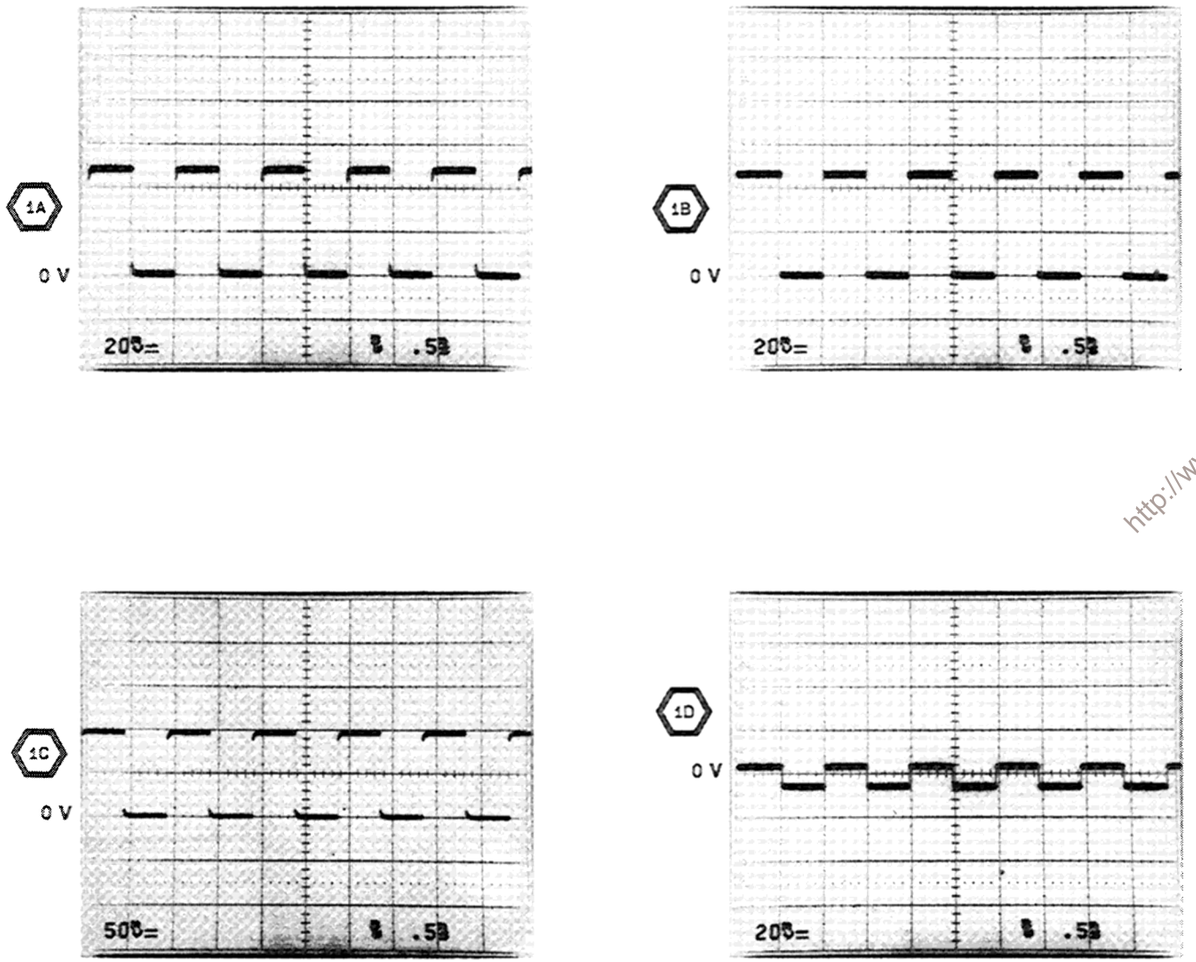

6555-39

http://www.ebaman.com

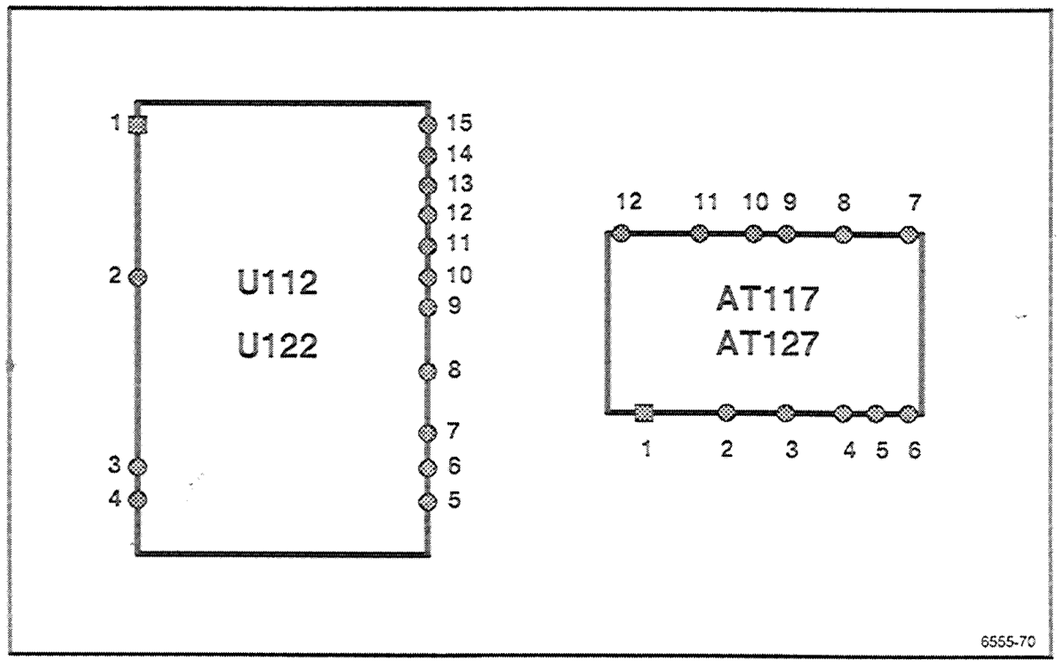

Figure 9-6. Hybrid pin identifiers.

WAVEFORMS

CIRCUIT NUMBER	+15V	+7.5V	+5V	GND	-7.5V
U112		5, 14		1, 3, 6, 15	7, 13
U122		5, 14		1, 3, 6, 15	7, 13
U171	16			8	
U172	16			8	
U173			16	8	

CH1 INPUT BUFFER AMPLIFIER & 1X, 2X, 5X ATTENUATORS

CH1 INPUT COUPLING & 10X, 100X ATTENUATORS

CH2 INPUT BUFFER AMPLIFIER & 1X, 2X, 5X ATTENUATORS

CH2 INPUT COUPLING & 10X, 100X ATTENUATORS

ATTENUATOR & GAIN CONTROL REGISTERS (SRO)

CH3 & CH4 INPUT AMPLIFIERS

Static Sensitive Devices
See Maintenance Section

FOR INTEGRATED CIRCUIT SUPPLY CONNECTIONS AND POWER SUPPLY DECOUPLING NETWORKS SEE: MAIN BOARD POWER DISTRIBUTION 13

PARTIAL A10 MAIN BOARD

http://www.ebamaan.com

WAVEFORMS FOR DIAGRAM 2

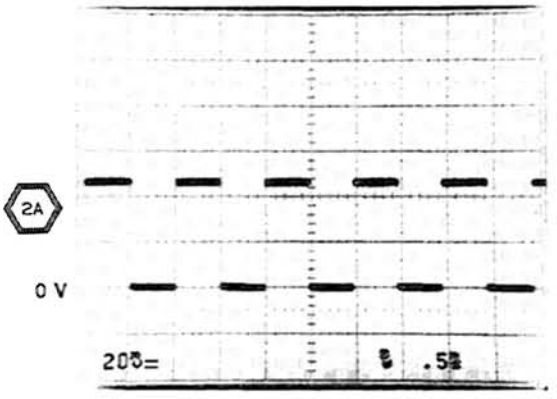

SET READOUT CONTROL CCW (OFF).

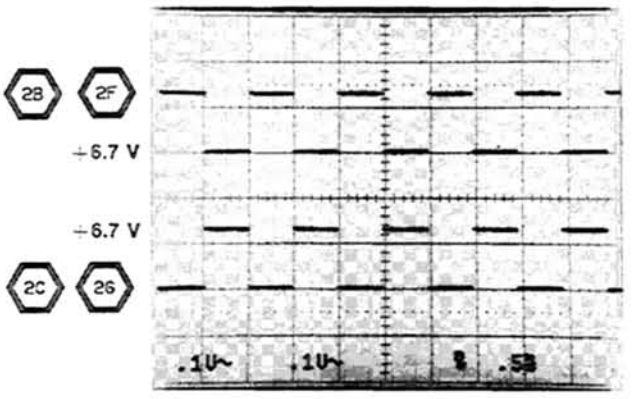

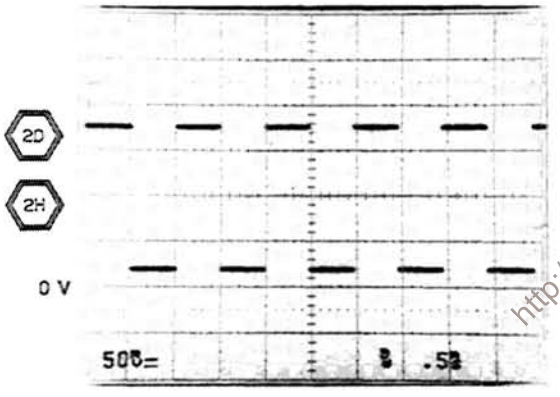

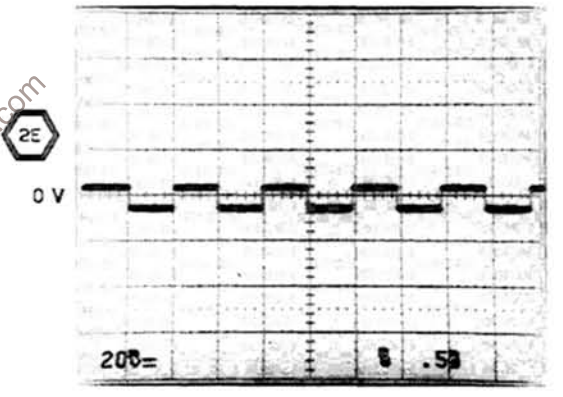

SET READOUT CONTROL CCW (OFF).

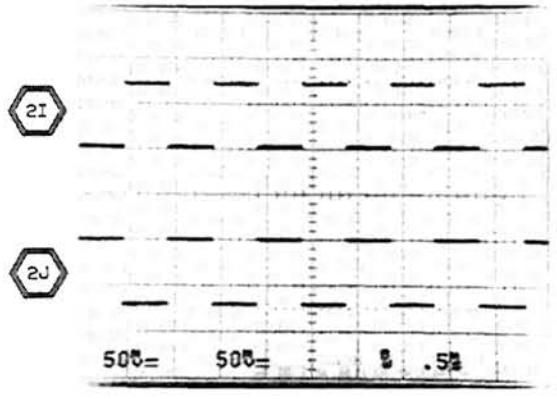

SET READOUT CONTROL CCW (OFF).

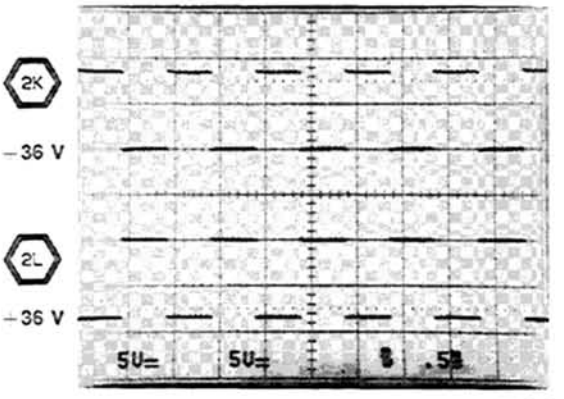

6555-40

http://www.ebaman.com

WAVEFORMS

VERTICAL PREAMPLIFIERS

U210 VERTICAL PREAMP M376-003
U220 VERTICAL PREAMP M376-003
U230 VERTICAL PREAMP M376-003
U240 VERTICAL PREAMP M376-003

CH 1 PREAMP IN+ FROM U112-8 (2M)
CH 1 VAR FROM W2304-8 (4B)
CH 1 PREAMP 1 FROM U171-11 (3M)
CH 1 PREAMP 0 FROM U172-4 (3M)
CH 1 EN FROM U600-39 (3M)
RO CH 1 POS EN FROM W2502-6 (8B)
CH 2 PREAMP IN+ FROM U122-8 (4M)
CH 2 VAR FROM W2304-9 (4B)
CH 2 PREAMP 1 FROM U173-4 (6M)
CH 2 PREAMP 0 FROM U173-5
CH 2 INVERT FROM U173-6
CH 2 EN FROM U600-38 (3M)
RO CH 2 POS EN FROM W2502-7 (8B)
CH 3 PREAMP IN+ FROM C190, L130, R139 (7M)
CH 3 PREAMP 1 FROM U173-7 (6M)
CH 3 EN FROM U600-37 (3M)
RO CH 3 POS EN FROM W2502-8 (8B)
CH 4 PREAMP IN+ FROM C191, L140, R159 (8M)
CH 4 PREAMP 1 FROM U173-14 (6M)
CH 4 EN FROM U600-36 (3M)
RO CH 4 POS EN FROM W2502-9 (8B)

CH 1 GAIN R211 5K
CH 2 GAIN R221 5K
CH 3 GAIN R231 5K
CH 4 GAIN R241 5K

CH 1 TR+ TO U421-7, U431-7
CH 2 TR+ TO U421-5, U431-5
CH 3 TR+ TO U421-3, U431-3
CH 4 TR+ TO U421-1, U431-1

U203A MC3403 — CH 1 POS FROM W2304-1 (3B)
U203B MC3403 — CH 2 POS FROM W2304-2 (3B)
U203C MC3403 — CH 3 POS FROM W2304-3 (3B)
U801B MC1458 — TRACE SEP FROM W2304-6 (3B)
U203D MC3403 — CH 4 POS FROM W2304-4 (3B)

RO VERT EN FROM R502, U503-4 (4E)
RO VERT FROM W2302-2 (1B)
TRACE SEP EN FROM U600-22 (3M)
RO TR SEP EN FROM W2502-10 (8B)

U202 74HC4053 DMUX
U201 74HC4053 DMUX

CIRCUIT NUMBER	+15V	+7.5V	+5V	GND	-5V
U201			16	8	7
U202			16	8	7
U203			4		11
U210		3			5, 6, 15, 16
U220		3			5, 6, 15, 16
U230		3			5, 6, 15, 16
U240		3			5, 6, 15, 16
U260	7			4	
U701	5		4	8, 10	14
U702			8		4
U801	8				4

U260 741

* DLY LINE COMP ADJUSTMENTS

DELAY-LINE DRIVER

Q250 Q251 Q252 Q253 — DL 21

VERTICAL POSITION SWITCHING

Q284 Q285 — U280 CA3054

RO VERT CENTERING

VERTICAL COMPARATOR

U702 311

VERT COMP TO U502-6 (5C)
DIG HORIZ POS FROM W2302-6 (1B)
VERT COMP EN FROM W1101 (5C)

Q703 Q704

BW LIMIT FROM W1102 (4L)
BEAM FIND FROM U503-7 (3E)
RO JITTER
VO GAIN

VERTICAL OUTPUT AMPLIFIER

U701 M429 VERTICAL OUTPUT AMPLIFIER

Q701 Q702

B IN (+90mV) — A IN (+72mV)
B OUT — A OUT
TS IN — TS OUT
TADJ — TA — BF
BWL B H — BWL B L — BWL A L — BWL A H

+58V_A
+VERTICAL OUTPUT TO V1 (P20, W20, 2K, 4M)
-VERTICAL OUTPUT TO V1 (P19, W19, 2L, 4M)

Static Sensitive Devices
See Maintenance Section

FOR INTEGRATED CIRCUIT SUPPLY CONNECTIONS AND POWER SUPPLY DECOUPLING NETWORKS SEE: MAIN BOARD POWER DISTRIBUTION (13)

PARTIAL A10 MAIN BOARD

http://www.ebamp.com

WAVEFORMS FOR DIAGRAM 3

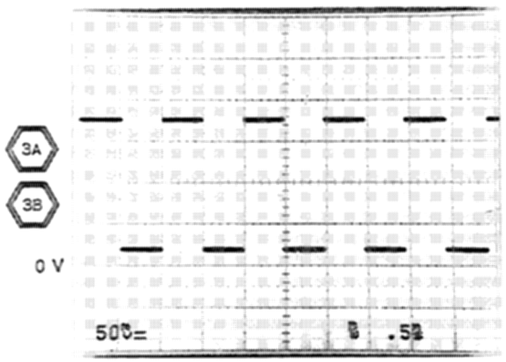

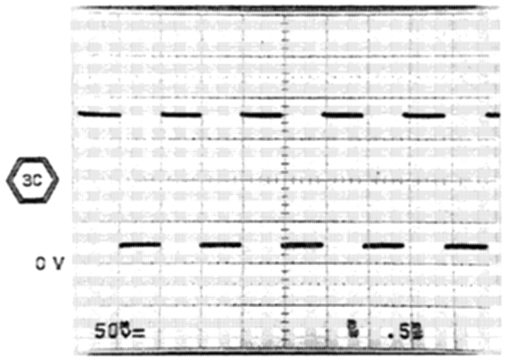

CONNECT 4-DIVISION COMPOSITE VIDEO SIGNAL. SET SLOPE TO ⌝ (NEGATIVE-GOING) FOR BOTH 2245A AND TEST OSCILLOSCOPE.

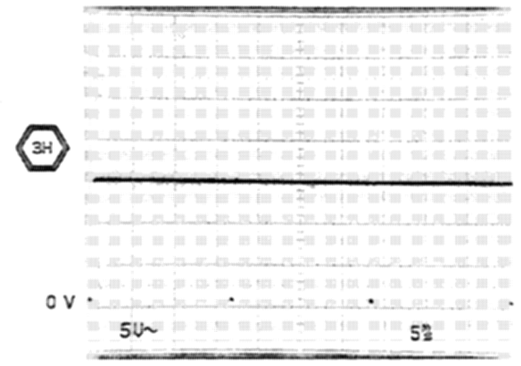

CONNECT 4-DIVISION COMPOSITE VIDEO SIGNAL. SET TRIGGER MODE TO TV FIELD.

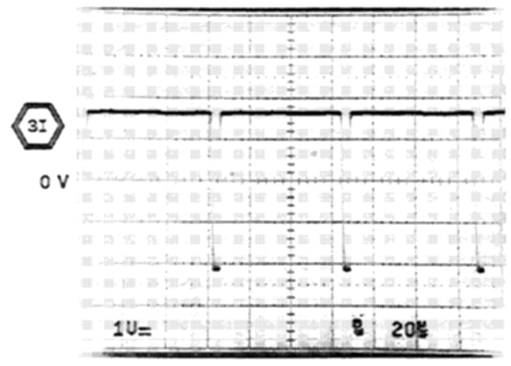

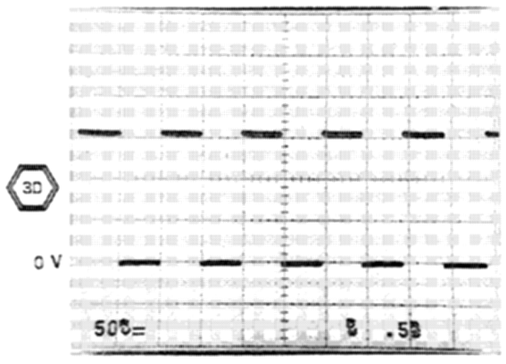

SET HORIZONTAL MODE TO ALT.

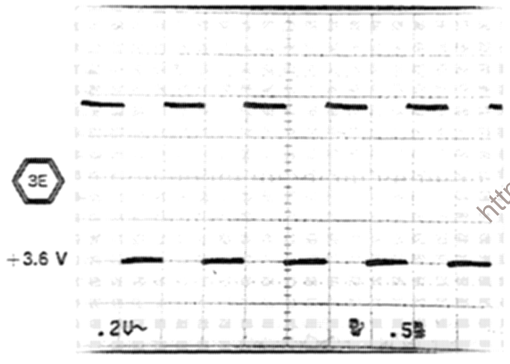

SET SLOPE TO ⌝ (NEGATIVE-GOING) FOR BOTH 2245A AND TEST OSCILLOSCOPE.

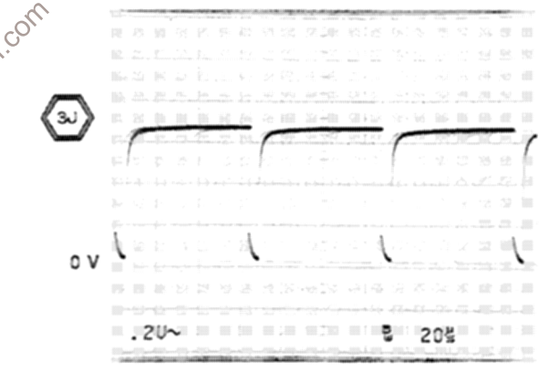

CONNECT 4-DIVISION COMPOSITE VIDEO SIGNAL. SET TRIGGER MODE TO TV FIELD. SET SLOPE TO ⌝ (NEGATIVE-GOING) FOR BOTH 2245A AND TEST OSCILLOSCOPE.

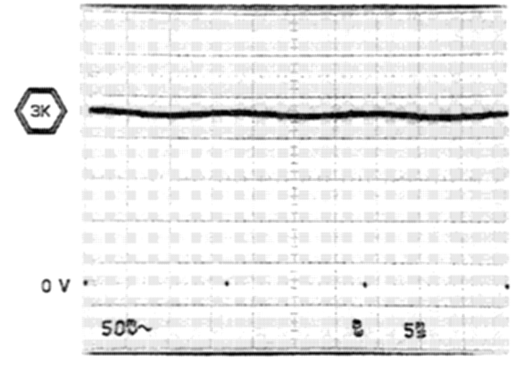

CONNECT 4-DIVISION COMPOSITE VIDEO SIGNAL. SET TRIGGER MODE TO TV FIELD.

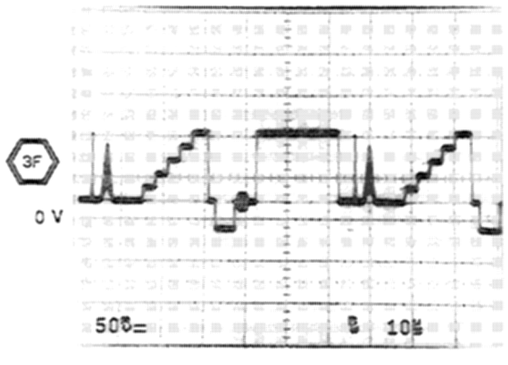

CONNECT 4-DIVISION COMPOSITE VIDEO SIGNAL. SET TRIGGER MODE TO TV FIELD.

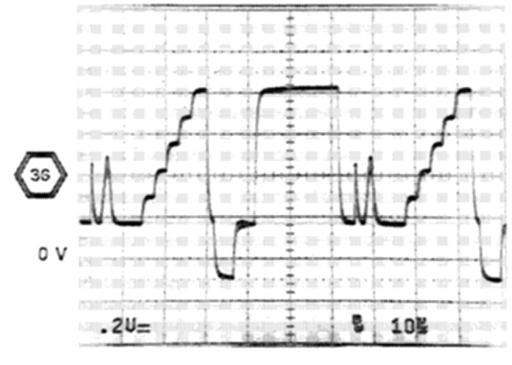

DIAGNOSTIC EXERCISE TIME REF AT 5 µs

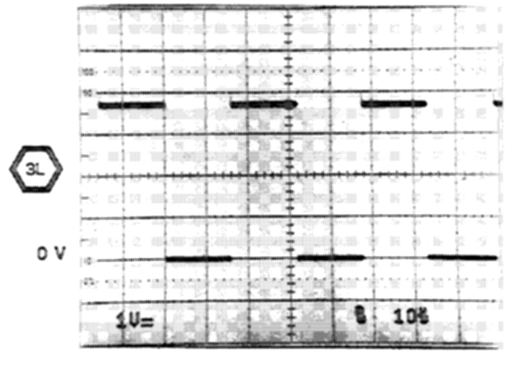

(6555-41)6557-91

http://www.ebaman.com

WAVEFORMS

A TRIGGER SOURCE SELECTOR

A TRIGGER COUPLING SELECTOR

A TRIGGER COMPARATOR

A TRIGGER BW LIMIT

B TRIGGER SOURCE SELECTOR

TV TRIGGER DETECTOR

B TRIGGER BW LIMIT

B TRIGGER COMPARATOR & MEASUREMENT A/D CONVERTER

AUXILIARY SHIFT REGISTER

TRIGGER SWITCHING LOGIC

B TRIGGER COUPLING SELECTOR

U421A M376-004

U421B M376-004

U421C M376-004

U1101A MC34082

U1101B MC34082

U1102A LM393N

U1102B LM393N

U1103 4094

U1104A 4053

U1104B 4053

U1104C 4053

U1106A 4053

U1106B 4053

U1106C 4053

U431A M376-004

U431B M376-004

U431C M376-004

U441A 74HC04

U441B 74HC04

U441C 74HC04

U441D 74HC04

U441E 74HC04

U441F 74HC04

1E CH 1 TR+ FROM W415-3

3E CH 2 TR+ FROM W416-3

4E CH 3 TR+ FROM W231

6E CH 4 TR+ FROM U240-20

1A LINE TRIG FROM J1204-3

8B TB CAL FROM W2502-5

TB CAL

5M TRIG CLK FROM U600-19

4M ATS 0 FROM U600-31

4M ATS 1 FROM U600-32

4M ATS 2 FROM U600-33

4M A SLOPE FROM U600-30

4M BTS 0 FROM U600-27

4M BTS 1 FROM U600-28

4M BTS 2 FROM U600-29

4M B SLOPE FROM U600-26

3E SR1 CLK TTL FROM U501-13

3C AUX DATA FROM U303-9

SOURCE SWITCHING

LEVEL SHIFTER

LATCH

COUPLING SWITCHING

NOISE RES

SLOPE

TO U421C

TO U431C

X AXIS TO W811 4B 6

X Y TO C319, U301-9 6A 6

MAG TO U802-6 5B 6

VERT COMP EN TO Q703 2L 2

B TV TRIG EN

TV FIELD SEL

BW FULL B

BW LIMIT

B TRIG BANDWIDTH

TV TRIG

TV FIELD

TV LINE

A TRIG LVL FROM W2302-3 1B 7

A TRIG TO U602-7 4 1F

B TRIG TO DL22 4 2F

BW LIMIT TO R726, U701-22 6K 2 U502-4 5C 4

B DELTA TRIG LVL FROM W2302-5 1B 7

B REF TRIG LVL FROM W2302-4 1B 7

DLY SEL FROM U600-25 6K 4

ZERO HYST FROM U173-13 7F 1

FOR INTEGRATED CIRCUIT SUPPLY CONNECTIONS AND POWER SUPPLY DECOUPLING NETWORKS SEE: MAIN BOARD POWER DISTRIBUTION 13

CIRCUIT NUMBER	+7.5V	+5V	GND	-5V	-7.5V
U421		20, 21, 22	26, 27	6	
U431		20, 21, 22	26, 27	6	
U441		14	7		
U1101	8				4
U1102	8				4
U1103		16	8		
U1104		16	8		7
U1106		16	8		7

Static Sensitive Devices
See Maintenance Section

PARTIAL A10 MAIN BOARD

www.eBayman.com

WAVEFORMS FOR DIAGRAM 4

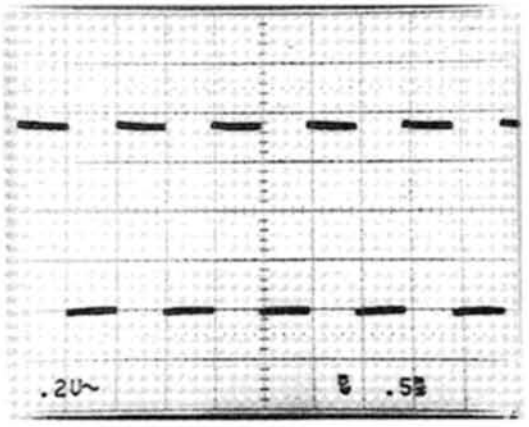

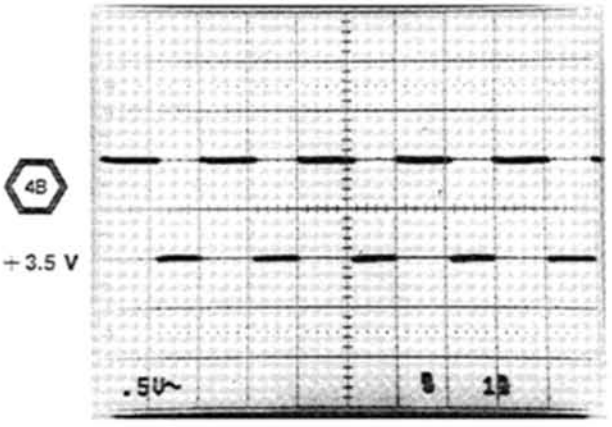

SET SEC/DIV TO 20 μs. WAVEFORM VARIES WITH SETTING OF TRIGGER HOLDOFF CONTROL.

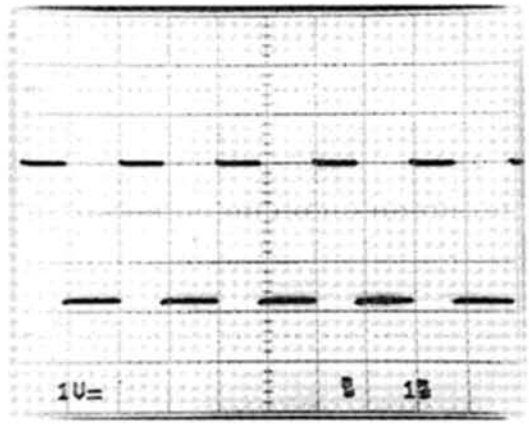

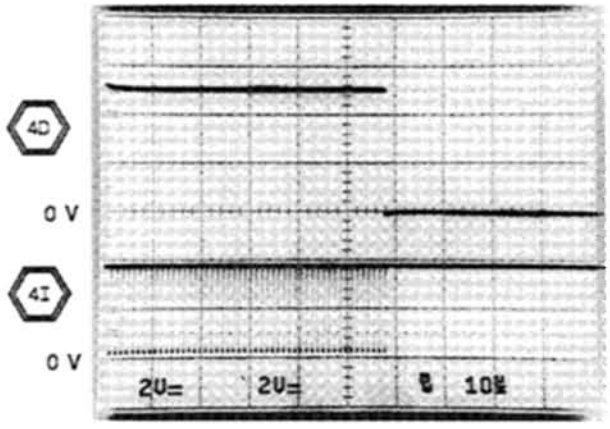

SET A & B SEC/DIV TO 0.1 ms, READOUT CONTROL CCW (OFF), AND HORIZONTAL MODE TO ALT.

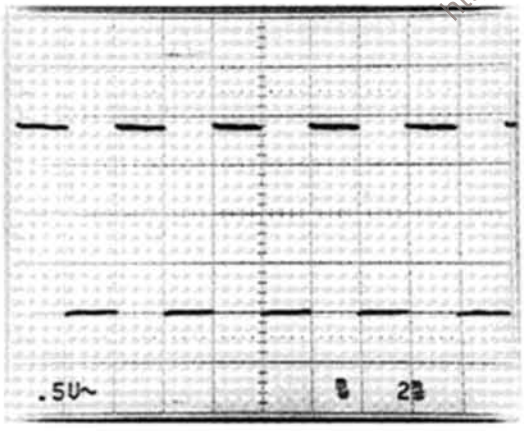

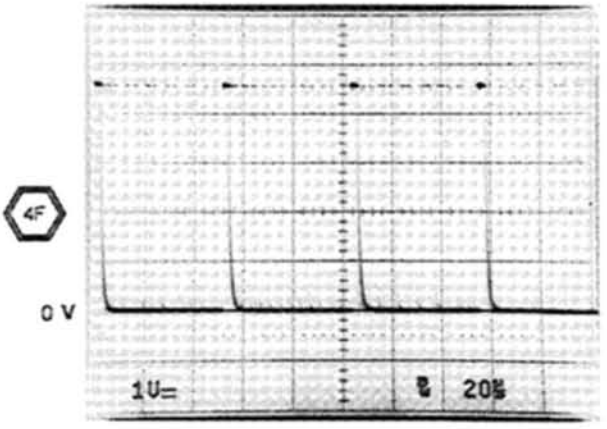

6555-33

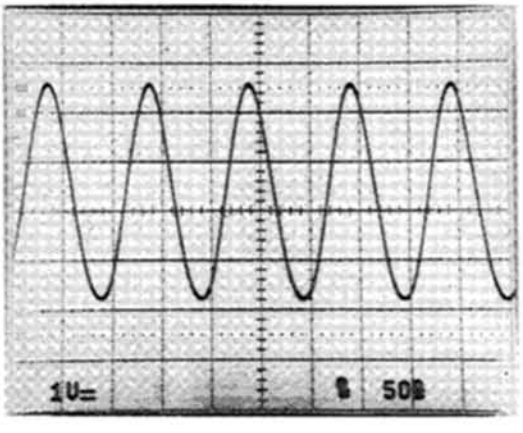

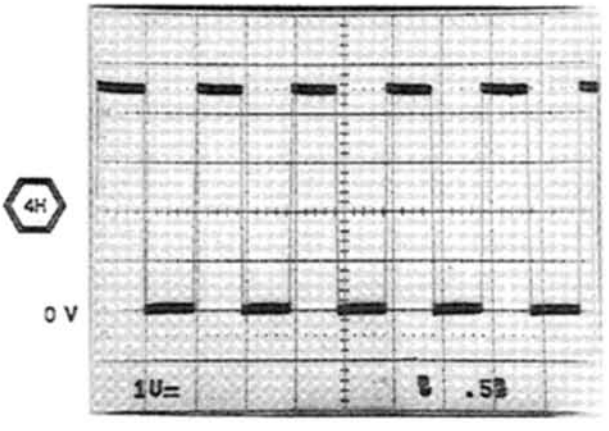

http://www.ebaman.com

WAVEFORMS

CIRCUIT NUMBER	+5V	GND
U501	16	8
U502	16	8
U503	16	8
U600	40	20
U601	8	4
U602	10, 13, 16, 25, 28, 31	1, 21
U603	1, 16	8
U604	1, 16	8
U606	14	7

PROCESSOR INTERFACE

TRIGGER LOGIC

LEVEL SHIFTERS

DISPLAY LOGIC

HOLDOFF OSCILLATOR

Static Sensitive Devices
See Maintenance Section

FOR INTEGRATED CIRCUIT SUPPLY CONNECTIONS AND POWER SUPPLY DECOUPLING NETWORKS SEE:
MAIN BOARD POWER DISTRIBUTION 13

PARTIAL A10 MAIN BOARD

http://www.ebaman.com

WAVEFORMS FOR DIAGRAM 5

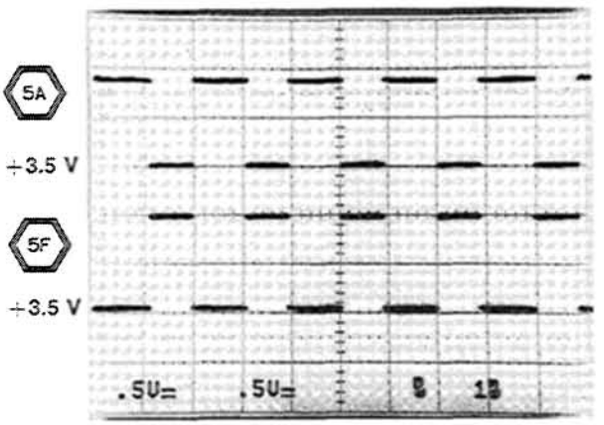

SET A SEC/DIV TO 2 ms.

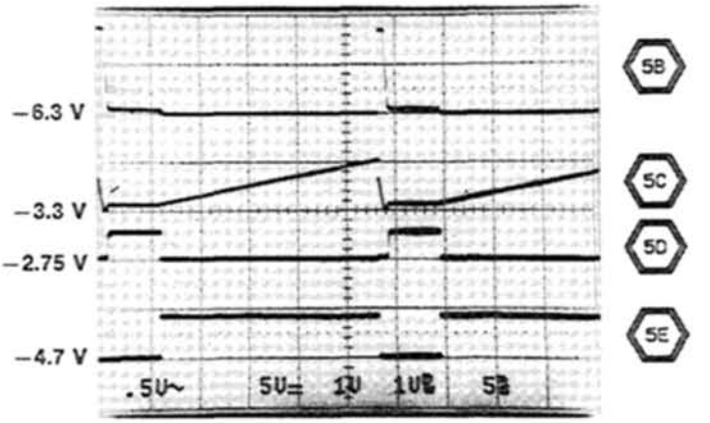

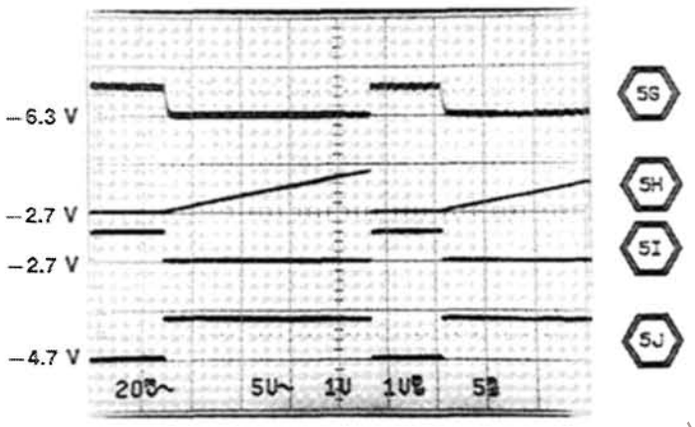

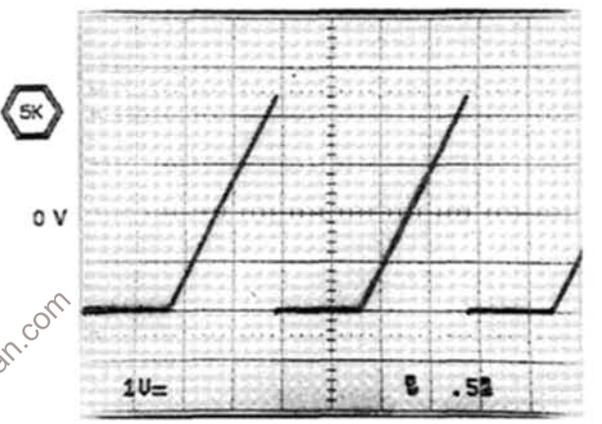

http://www.ebaman.com

HORIZ MODE A, A SEC/DIV 2μs,
HOLDOFF MIN (CCW)

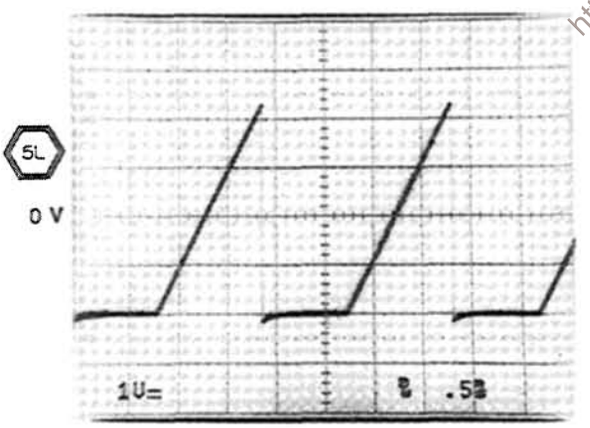

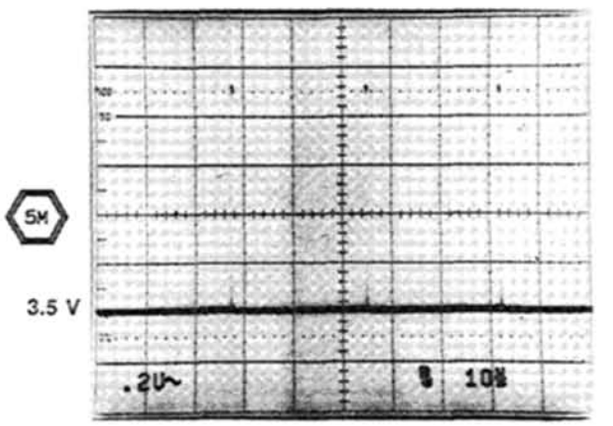

HORIZ MODE ALT, A SEC/DIV 2μs,
B SEC/DIV .5μs, HOLDOFF MIN,
DELAY-INTENSIFIED ZONE STARTS MIDSCREEN

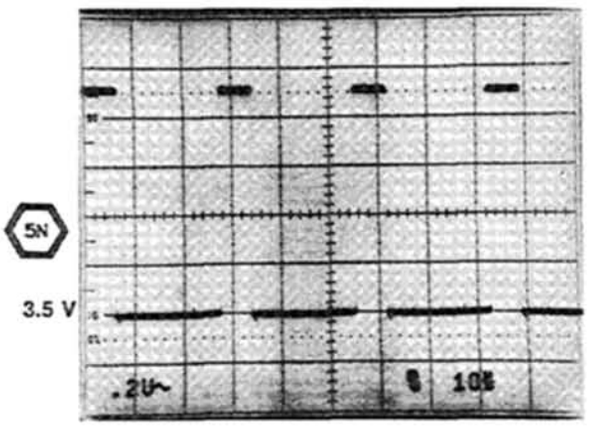

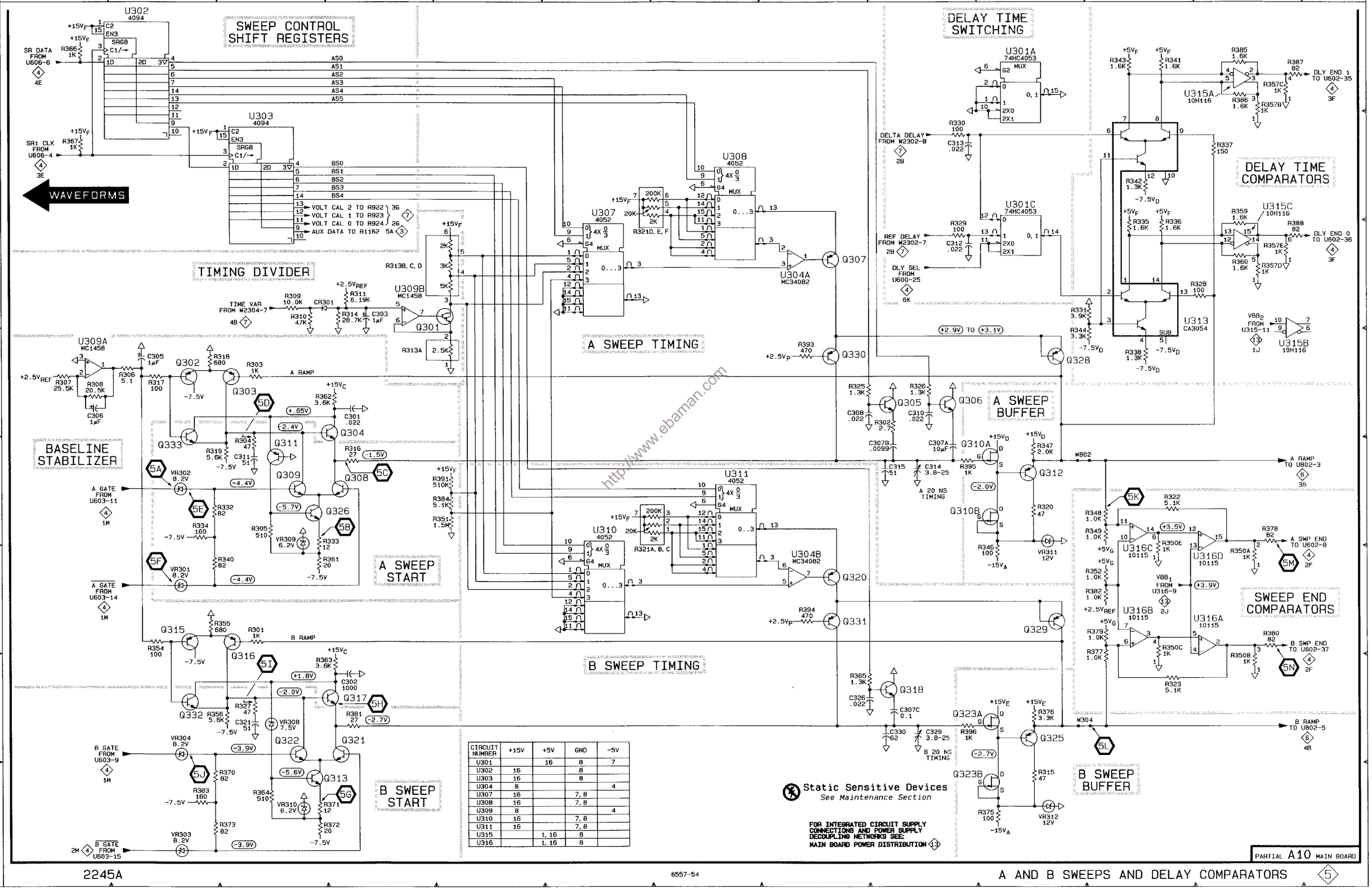

CIRCUIT NUMBER	+15V	+5V	GND	-5V
U301		16	8	7
U302	16		8	
U303	16		8	
U304	8			4
U307	16		7, 8	
U308	16		7, 8	
U309	8			4
U310	16		7, 8	
U311	16		7, 8	
U315		1, 16	8	
U316		1, 16	8	

WAVEFORMS FOR DIAGRAM 6

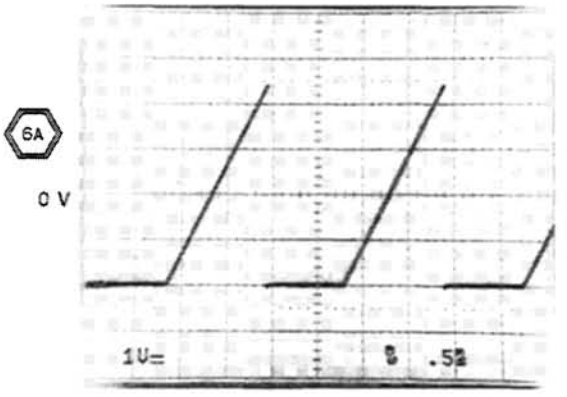

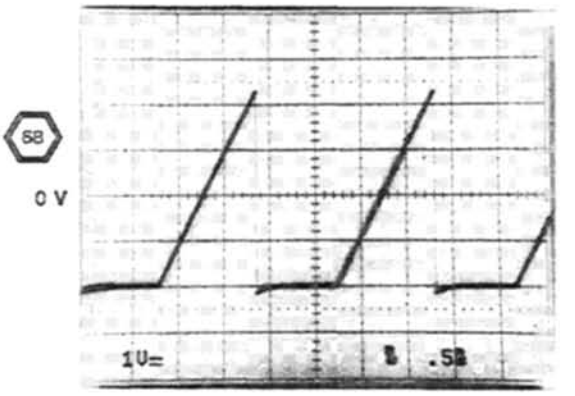

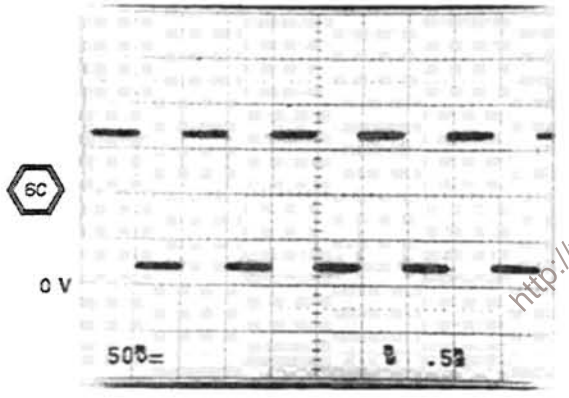

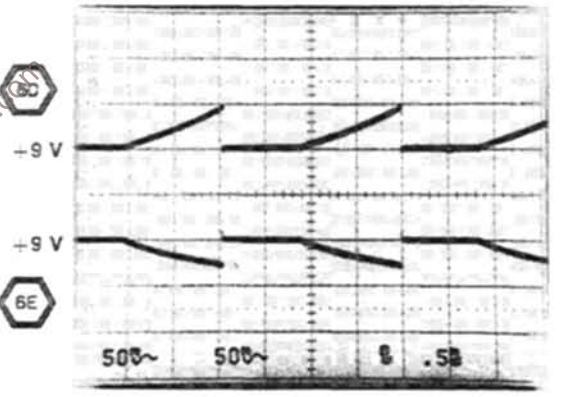

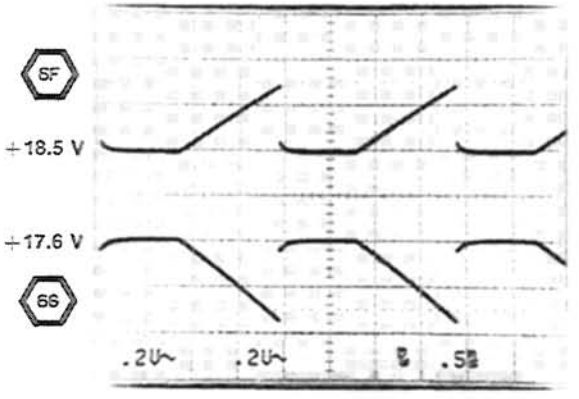

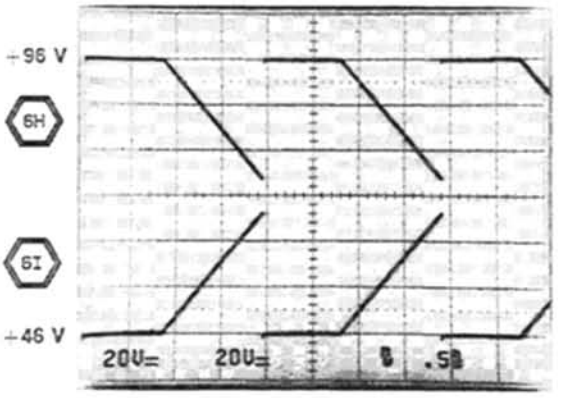

6555-43

http://www.ebaman.com

WAVEFORMS

HORIZONTAL PREAMPLIFIER

DRIVER AMPLIFIERS

HORIZONTAL OUTPUT AMPLIFIERS

U802 234-0401-21 HORIZONTAL PREAMP

5M 5 A RAMP FROM W802 — 6A — 3 A
7M 5 B RAMP FROM W304 — 6B — 5 B
2E 3 X AXIS FROM L426 — W811 W810 — 6C — R827 250 X GAIN — R836 374 — 7 X
1B 7 RO HORIZ FROM W2302-1 — R807 75 — CR801 — R823 500 cw RO HORIZ GAIN — C808 100 — 1 RO
5K 4 HD0 FROM U600-24 — W805 W806 — 8 HD0 (LSB)
HD1 FROM U600-23 — W807 W808 — 11 HD1 (MSB)
5C 3 MAG FROM U1103-6 — 6 MAG
3E 4 BEAM FIND FROM U503-7 — 14 BF

U301B 74HC4053 MUX
1B 7 DIG HORIZ POS FROM W2302-6 — W305 — R358 560 — R353 1.5K — R369 330 — 5 0 3 1 9 2X0 2X1 — 0,1 4 15 POSITION — C817 100μF
6C 3 X FROM U1103-12 — C319 .022

HORIZ 1X GAIN — +7.5V cw R826 5K — 2 GA1
HORIZ X10 GAIN — +7.5V cw R825 5K — 10 GA10

LOUT 13 — AOUT 12

6D — R808 2.4K — MAG REG R809 5K cw +15V$_G$ — R810 2.4K — 6E
R857 5.49K — R856 9.76K — +9.5V — R854 200
R855 200

+8.8V — Q810 — +17.7V — 6F — R842 10K +58V — Q804 — R841 10
+18.4V — Q803 — R845 10 — R805 1.8K — +17.8V
+8.8V — Q809 — +18.1V — Q808 — R847 10 — 6G — R850 4.3K — +17.4V — Q807 — R851 10 — +17.8V

R806 16.5K — 2 NS TIMING — C807 0.25-1.5pF
R843 750 +58V — R844 750 — VR802 24V — C804 .022
R848 2.2K +58V — R849 2.2K

+130V — R803 5.6K — R804 100K — C803 .015
+124V — R840 47 — Q801 — R828 20K
+130V — R801 430
+60.6V — Q802 — C802 0.1 — R858 301
+78.2V — Q805 — C809 0.1 — R819 75
+124V — R853 47 — Q806 — R829 20K
+130V — R815 100K — R814 5.6K
+130V — R813 430

R802 75 — 6H — W17 — P17 -HORIZONTAL OUTPUT TO V1 — 7 3M
CR802 +130V
6I — W18 — P18 +HORIZONTAL OUTPUT TO V1 — 7 4M
CR819 +130V

R846 39.2
VR801 15V — C805 .022
R852 56.2

2 NS TIMING — C814 0.25-1.5pF — R816 16.5K

R811 5.76K — R812 5.76K
U801A MC1458 — R820 150.0K — R821 150.0K — C819 100 — R822 5.62K — -5V$_F$

CIRCUIT NUMBER	+15V	+7.5V	+5V	GND	-5V
U301			16	8	7
U801	8				4
U802		16		4	9

COMMON MODE STABILIZER

Static Sensitive Devices
See Maintenance Section

FOR INTEGRATED CIRCUIT SUPPLY CONNECTIONS AND POWER SUPPLY DECOUPLING NETWORKS SEE: MAIN BOARD POWER DISTRIBUTION 13

PARTIAL A10 MAIN BOARD

http://www.ebaman.com

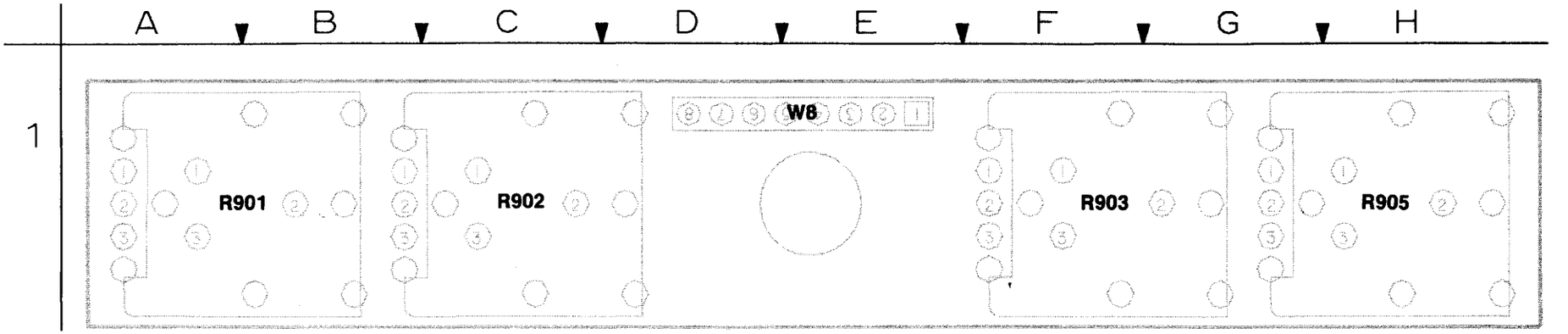

Figure 9-7. A8—CRT Control board.

A8—CRT CONTROL BOARD

CIRCUIT NUMBER	SCHEM NUMBER	CIRCUIT NUMBER	SCHEM NUMBER	CIRCUIT NUMBER	SCHEM NUMBER
R901	7	R905	7	W900	13
R902	7				
R903	7	W900	7		

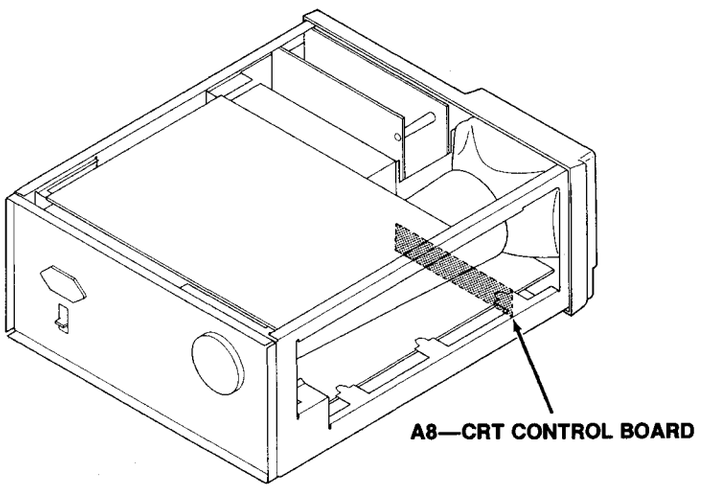

WAVEFORMS FOR DIAGRAM 7

SET READOUT CONTROL CCW (OFF) AND A INTEN CONTROL CW (FULLY ON).

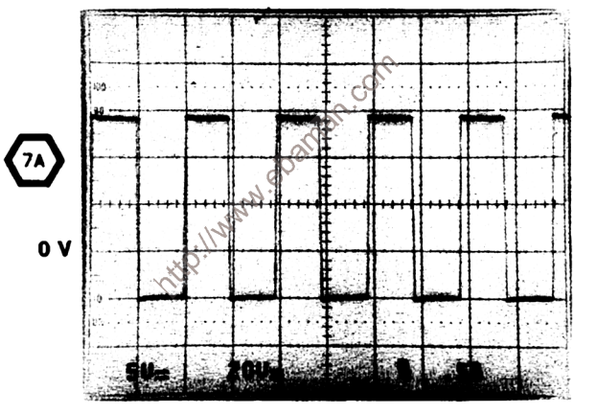

SET READOUT CONTROL CCW (OFF) AND A INTEN CONTROL CW (FULLY ON).

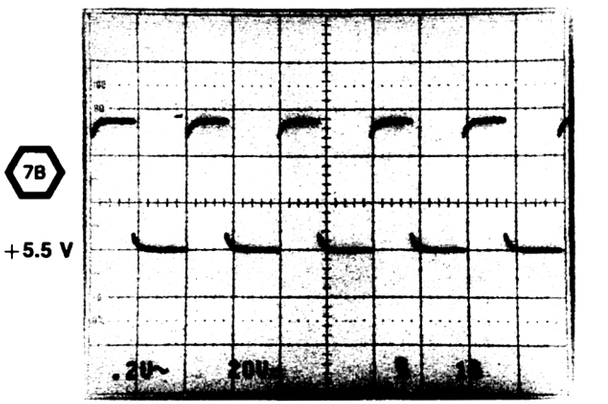

SET READOUT CONTROL CCW (OFF) AND A INTEN CONTROL CW (FULLY ON).

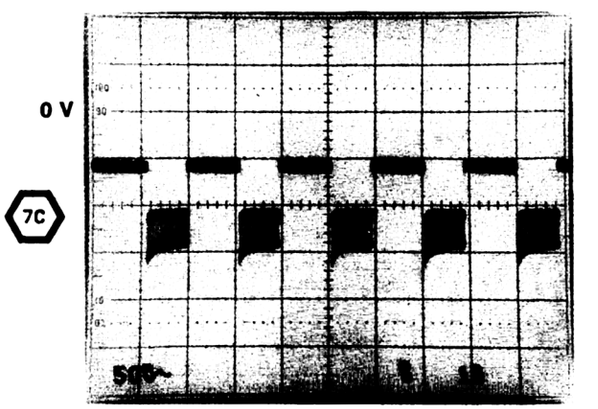

SET READOUT CONTROL CCW (OFF) AND A INTEN CONTROL CW (FULLY ON).

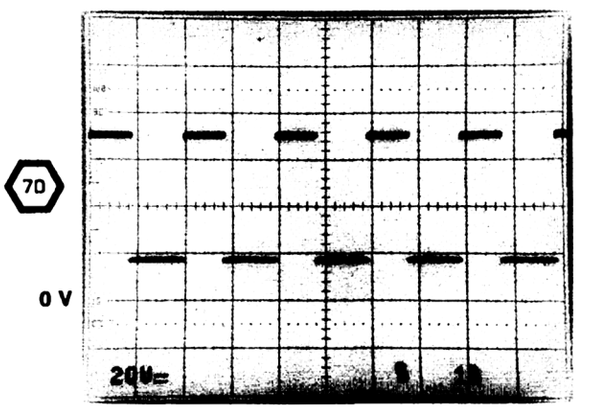

WAVEFORMS

CONTROL MULTIPLEXER

P2302
AO HORIZ → AO HORIZ TO A807 5B (6)
AO VERT → AO VERT TO R207 7C (2)
A TRIG LVL → A TRIG LVL TO W410 3L
B REF TRIG LVL → B REF TRIG LVL TO U1106-3 8J (3)
B DELTA TRIG LVL → B DELTA TRIG LVL TO U1106-5 8J (2)
DIG HORIZ POS → DIG HORIZ POS TO R710, R722 2L (W305 6A (6))
REF DELAY → REF DELAY TO R329 3J
DELTA DELAY → DELTA DELAY TO R330 2J (5)
MAIN BD MUX → R503 10K
TO/FROM J2302 3M (9) 2M (11)
POT5 → R508 10K
POT6 → R510 10K
POT7 → R512 10K
W2302

U506 CD4051 MUX 8X 0/7
1C (1) CH 1 PRB FROM C111, R105
3C CH 2 PRB FROM C121, R106
7C CH 3 PRB FROM C131, R107
8C CH 4 PRB FROM C151, R108
0...7 Ω3

P2304
CH 1 POS → CH 1 POS TO C218, U203-3 6B
CH 2 POS → CH 2 POS TO C228, U203-5 7B
CH 3 POS → CH 3 POS TO C238, U203-10 7B
CH 4 POS → CH 4 POS TO C248, U203-12 8B (2)
HOLDOFF → HOLDOFF TO R636 8H (4)
FROM J2304 6M (11) TRACE SEP → TRACE SEP TO W815 8B (2)
TIME VAR → TIME VAR TO R309 3C (5)
CH 1 VAR → CH 1 VAR TO R225 1B
CH 2 VAR → CH 2 VAR TO R227 2B (2)
A INTEN
B INTEN
AO INTEN
W2304

SCALE ILLUMINATION

+15V +15V +15V
DS901 DS902 DS903
Q905 Q907 Q908
R906 12 R907 12 R908 12
R909 100

PROBE ADJUST

+2.5V REF → R930 750 → U930A MC1458 → R936 3.52K
R931 1.0K R932 3.01K W906
7A
+15V → R938 7.5K → +4.10V
R934 1.2K
R939 1.5K → CLK 1K TO U600-2
6L (4)
U930B MC1458
R933 2.7K → +4.26V
C935 .022 R935 22K
CR936 → CR935 R940 1.2K → R937 200 → J15 PROBE ADJUST

CIRCUIT NUMBER	+15V	+7.5V	+5V	GND	-5V	-7.5V
U506			16	8		7
U930	8					4
U931			16	8	7	
U1001		4				11

VOLTS CAL SIGNAL SOURCE

3C VOLT CAL 0 FROM U303-11
2C (5) VOLT CAL 1 FROM U303-12
VOLT CAL 2 FROM U303-13
R924 10K R923 10K R922 10K
+2.5V REF → R920 200 CW VOLTS CAL → R921 2.15K 150 50 125 75 62.5
U931 HC4051B MUX 8X 0/7
0...7 Ω3 → VOLT CAL TO R114, R124 1F (1)

Static Sensitive Devices
See Maintenance Section

FOR INTEGRATED CIRCUIT SUPPLY CONNECTIONS AND POWER SUPPLY DECOUPLING NETWORKS SEE: MAIN BOARD POWER DISTRIBUTION (13)

CRT

V1
P26 13.7KV FROM J2726 (12) 7M → PDA
+7.5V CW R911 2.5K C910 .022 -7.5V
TRACE ROTATION
J927 P27 → TRACE ROTATION COIL
R910 100
+130V_B R27B5 1K GEOM R2784 100K CW C27B3 0.1
W9 P9 10
-HORIZONTAL OUTPUT FROM P17 (6) 3M
+HORIZONTAL OUTPUT FROM P18 (6) 5M
+VERTICAL OUTPUT FROM P20 (2) 3N
-VERTICAL OUTPUT FROM P19 (2) 4N
L R TOP BOT
PARTIAL A10 MAIN BOARD

Z-AXIS & AUTO FOCUS AMPLIFIERS

Z-AXIS RESP R2709 10.0K R2708 10.0K C2704 0.25-1.50
+130V_A R2717 5.6K C2708 0.1
R2716 33K (+98.6V) R2715 100K
Q2701 Q2702 Q2703 Q2704
R2714 33K C2705 .0022 R2713 33K C2707 4.7
R2712 33K R2711 33K C2706 4.7
7G R2718 75 (+14.7V TO +39.5V)
C2711 .01
GRID BIAS +130V_B R2719 20K CW R2745 1K C2710 .01 R2720 20K
CR2703 CR2704 C2712 1200 C2713 2200 R2722 240K
R2721 4.7K R2723 510 7I
CR2701 CR2702 R2724 6.2M C2724 .01
DS2702 DS2701
+130V_B R2786 82K R2787 36K C2784 .022
ASTIG +130V_B R2789 1K R2788 100K CW -7.5V_B C2785 0.1
P9 7 5 4 3 2 1 14
W9

+130V_A R2739 7.5K CR2714 C2717 0.1
R2738 33K (+99.5V) R2737 100K R2736 20K
Q2713
7D R2740 75 C2719 .01
(+47.1V TO +72.4V)
C2716 2200 Q2712
CR2715 CR2718 CR2716 CR2713 CR2717
R2743 1.2K R2742 240K R2741 4.7K R2750 510 R2751 6.2M
C2720 1200 C2721 2200
DS2703 DS2704
C2758 .01 R2758 5M FOCUS
R2760 660K 660K 2.5M
7H 7F

+15V_I R2735 1.2K (+.58V) Q2711 R2733 1K R2734 100 C2715 .022 -7.5V_B
7C (+.18V)
+15V_I R2727 1.62K R2726 100 R2728 20 Q2708 Q2709 -7.5V_B R2729 1.50K -7.5V_B
+15V_I R2703 8.45K (+6.6V) C2723 .022 R2704 499 R2795 6.04K
R2796 10 Q2715
R2701 143 R2702 39K
Q2707 (+10.7V) R2765 887 C2759 22 R2706 10K
CR2707 BEAM FIND FROM U503-7 3E (4) R2705 1K Q2706
+15V_I Q2705 VR2701 9.1V C2703 .022 R2710 360 -7.5V_B
CR2705 (+.60V) 7E
(13) 4B 130VAC FROM J1204-13 W1288

Z-AXIS/ FOCUS DRIVER

+5V_C R1028 1K
VBB3 FROM U604-11 26 (13) CR1005 W1000
U1001D LM324 6K (4) A INTEN GATE FROM U602-17 (+4.2V TO +3.1V)
R1001 2.55K +15V_I R1005 4.02K CR1001 Q1001
R1021 5.1K R1020 2.7K C1001 10µF -7.5V_C
U1001C LM324 (4) AO INTEN GATE FROM U602-20 6H
R1002 2.55K Q1002
R1023 5.1K R1022 2.7K C1002 10µF -7.5V_C
U1001B LM324 (4) IZ INTEN GATE FROM U602-19 6H
R1003 5.1K Q1003
R1025 5.1K R1024 2.7K C1003 10µF -7.5V_C
U1001A LM324
R1004 2.55K Q1004
6H (4) B INTEN GATE FROM U602-18
+15V_I R1007 4.02K CR1002 R1008 806
W1010 W2701 (7B) (+5.83V TO +6.00V)
C1004 .022 R1010 10K R1009 10K CR1004 CR1003 +7.5V_D Q1005
J16 EXT Z AXIS W16

+15V W900 -1 R905 4.7K CW SCALE ILLUM
+2.5V_P W900 -2 R901 4.7K CW -2.5V_P A INTEN
W900 -3 R903 4.7K CW -2.5V_P READOUT
W900 -4 R902 4.7K CW -2.5V_P B INTEN
R505 10K R506 10K R507 10K
PARTIAL A8 CRT CONTROL BOARD

PB 2 -2.7KV
FROM J2208 (12) 7M FIL 1 1 FIL 2 3
W9

http://www.ebaman.com

WAVEFORMS FOR DIAGRAM 7

7A

0 V

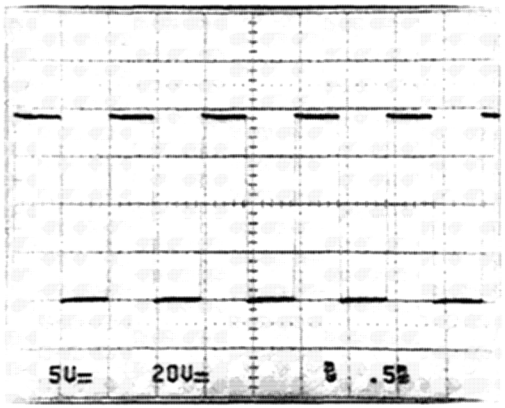

SET READOUT CONTROL CCW (OFF) AND A INTEN CONTROL CW (FULLY ON).

7B

+5.5 V

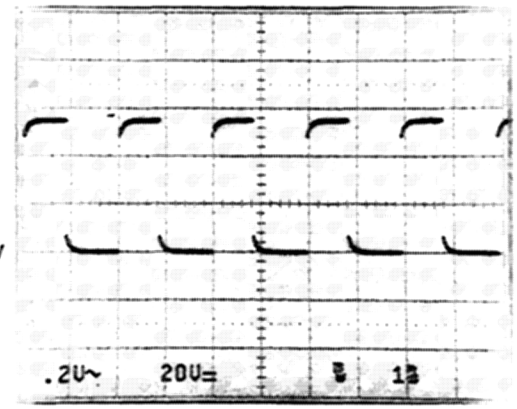

SET READOUT CONTROL CCW (OFF) AND A INTEN CONTROL CW (FULLY ON).

7G

0 V

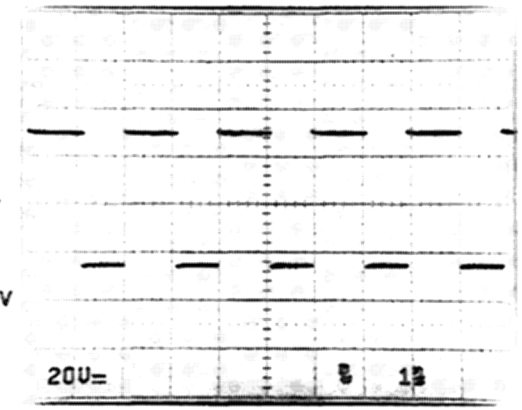

SET READOUT CONTROL CCW (OFF) AND A INTEN CONTROL CW (FULLY ON).

0 V

7C

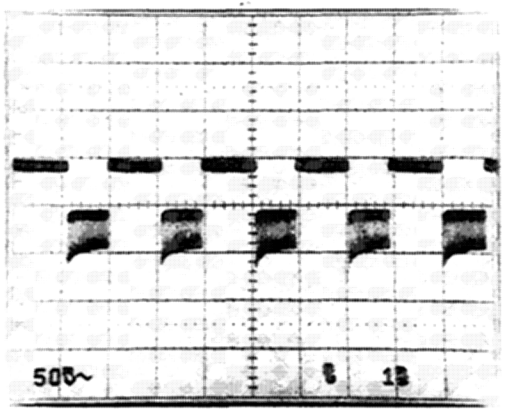

SET READOUT CONTROL CCW (OFF) AND A INTEN CONTROL CW (FULLY ON).

7D

0 V

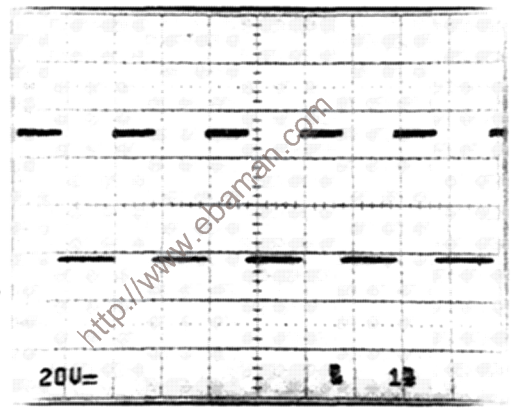

SET READOUT CONTROL CCW (OFF), A INTEN CCW (OFF), B INTEN CW (FULLY ON), AND HORIZONTAL MODE TO ALT.

7H

0 V

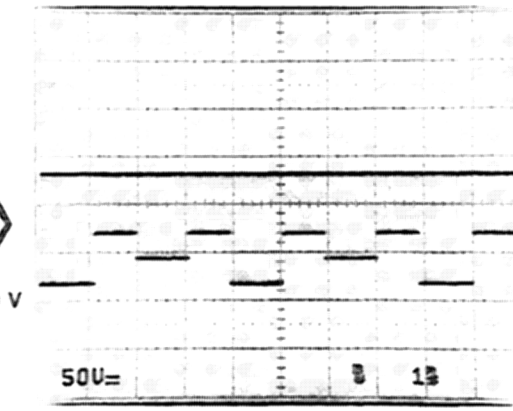

+0.62 V

7E

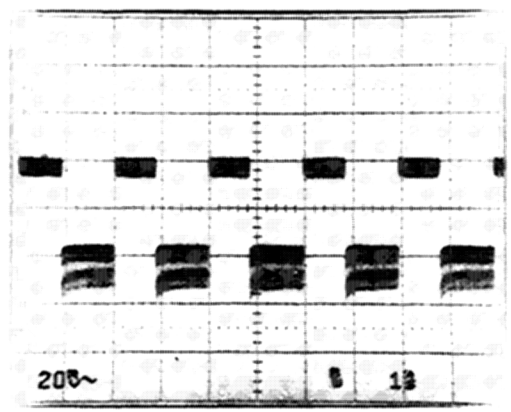

0 V

7F

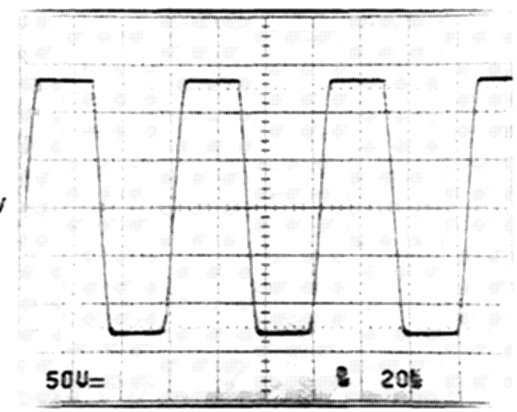

SET READOUT CONTROL CCW (OFF), A INTEN CCW (OFF), B INTEN CW (FULLY ON), AND HORIZONTAL MODE TO ALT.

7I

0 V

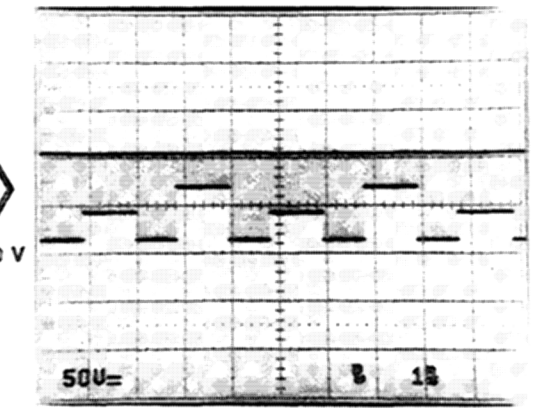

http://www.ebaman.com

CIRCUIT NUMBER	+5V	GND
U2501	9, 43	26, 60
U2502	8	4
U2503	14	7
U2506	14	7
U2512	20	10
U2513	20	10
U2514	20	10
U2515	20	10
U2517	16	8
U2518	16	8
U2519	32	16

DATA BUFFERS

MEASUREMENT PROCESSOR

ADDRESS LATCHES

RAM

ROM

ADDRESS DECODERS

POWER-ON RESET

Static Sensitive Devices
See Maintenance Section

FOR INTEGRATED CIRCUIT SUPPLY CONNECTIONS AND POWER SUPPLY DECOUPLING NETWORKS SEE: PROCESSOR BOARD POWER DISTRIBUTION 15

http://www.ebarnan.com

PARTIAL A16 PROCESSOR BOARD

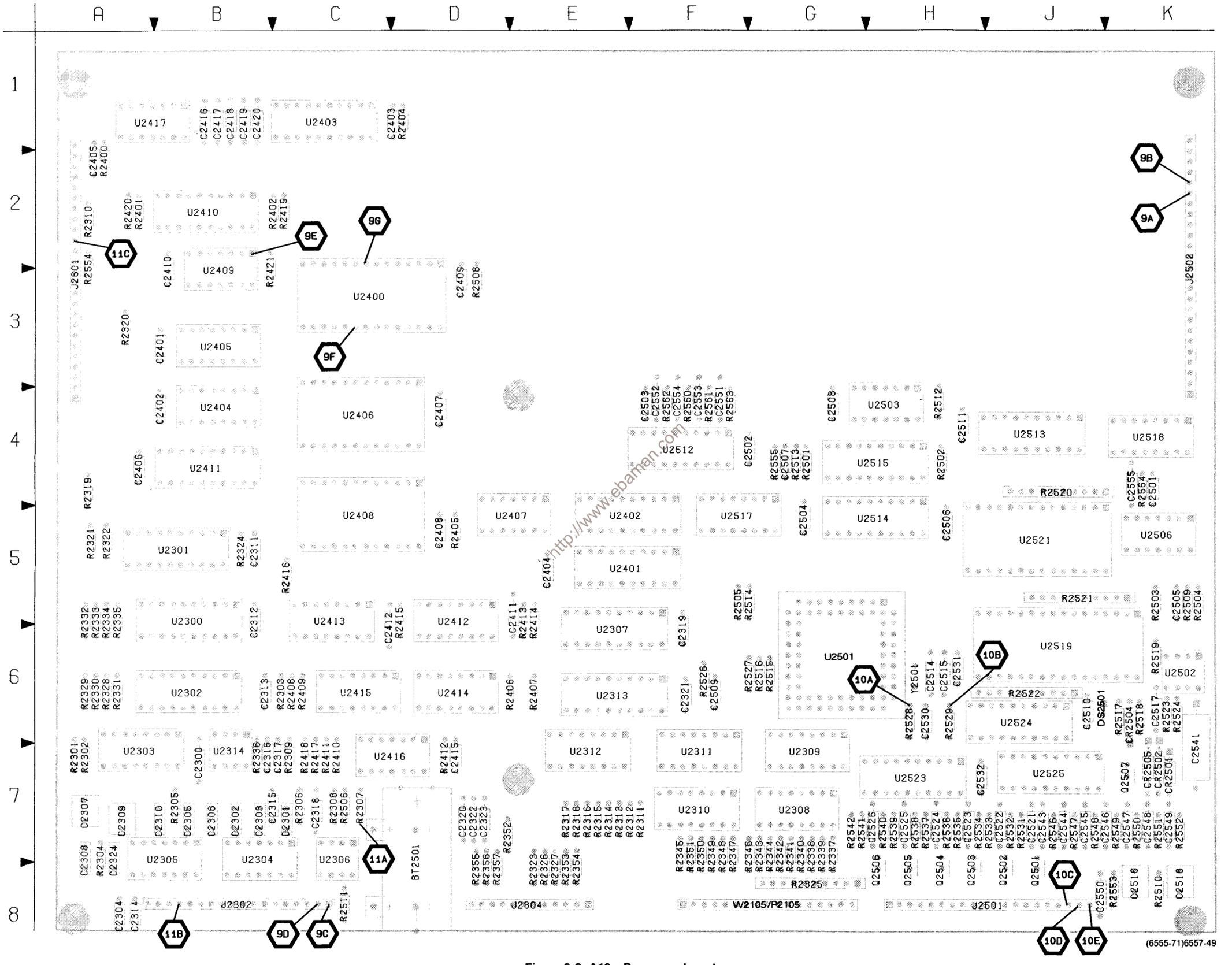

(6555-71)6557-49

Figure 9-8. A16—Processor board.

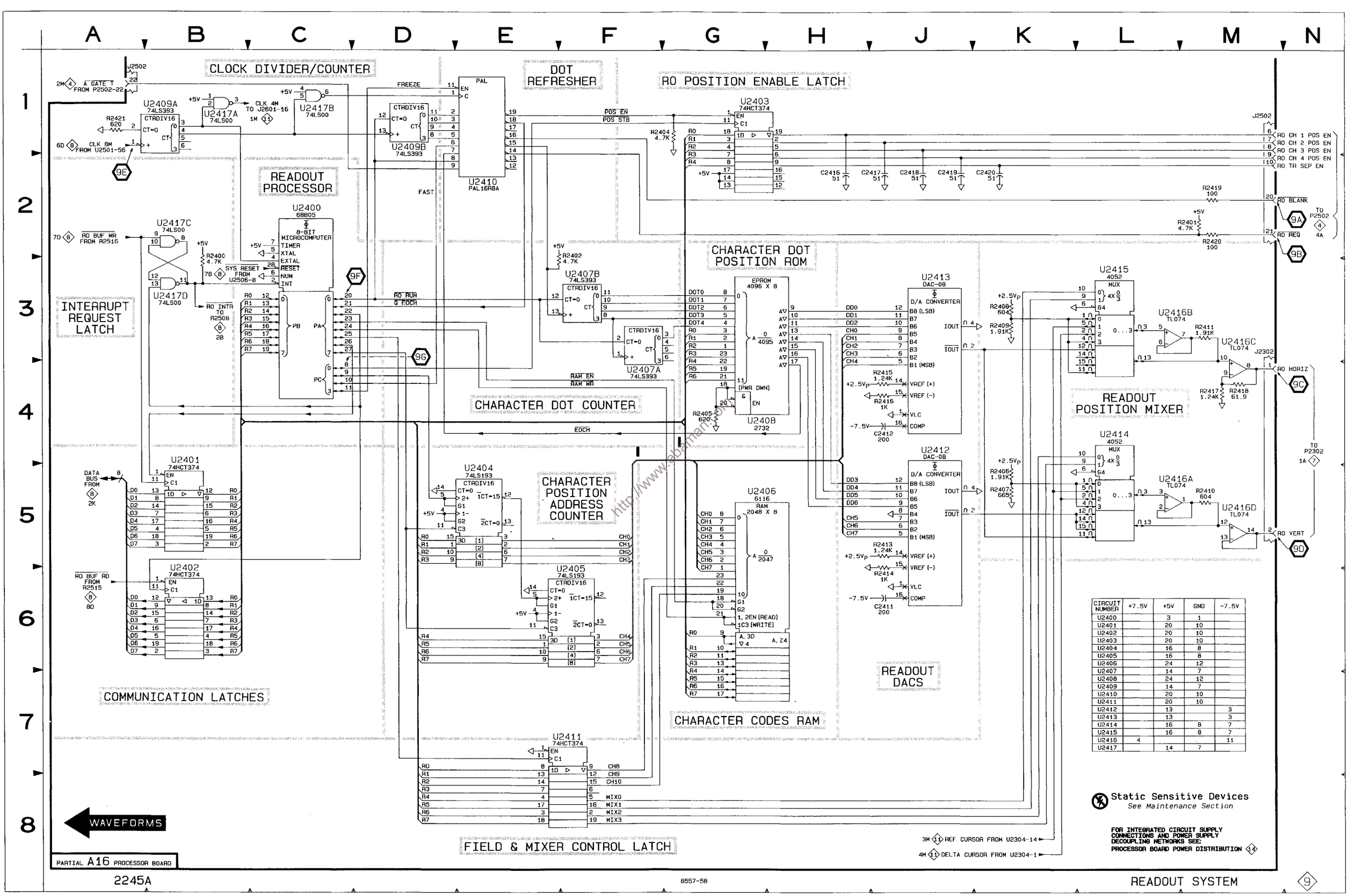

CIRCUIT NUMBER	+7.5V	+5V	GND	-7.5V
U2400		3	1	
U2401		20	10	
U2402		20	10	
U2403		20	10	
U2404		16	8	
U2405		16	8	
U2406		24	12	
U2407		14	7	
U2408		24	12	
U2409		14	7	
U2410		20	10	
U2411		20	10	
U2412		13		3
U2413		13		3
U2414		16	8	7
U2415		16	8	7
U2416	4			11
U2417		14	7	

http://www.ebaman.com

WAVEFORMS FOR DIAGRAM 9

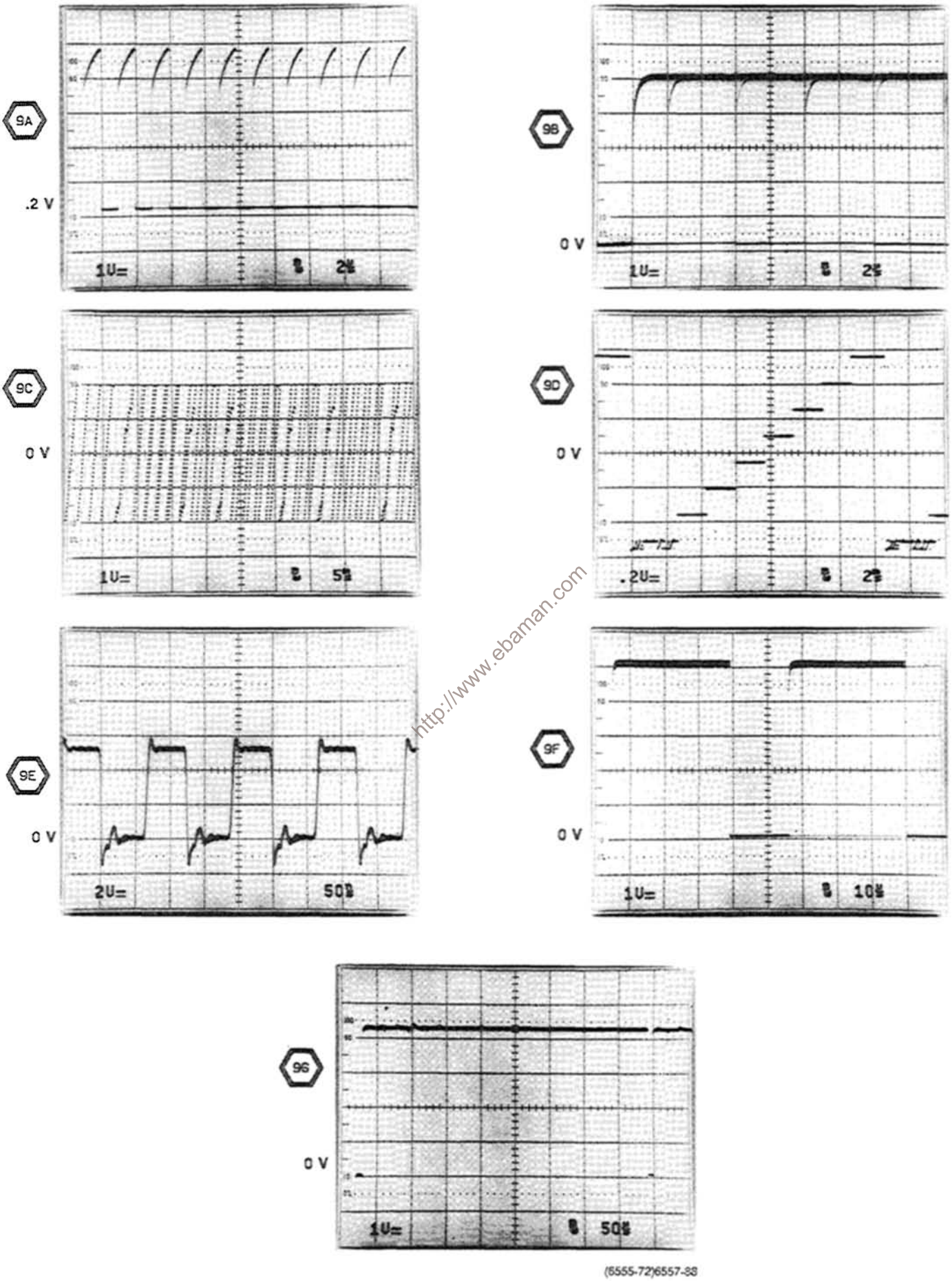

http://www.ebaman.com

(5555-72)6557-88

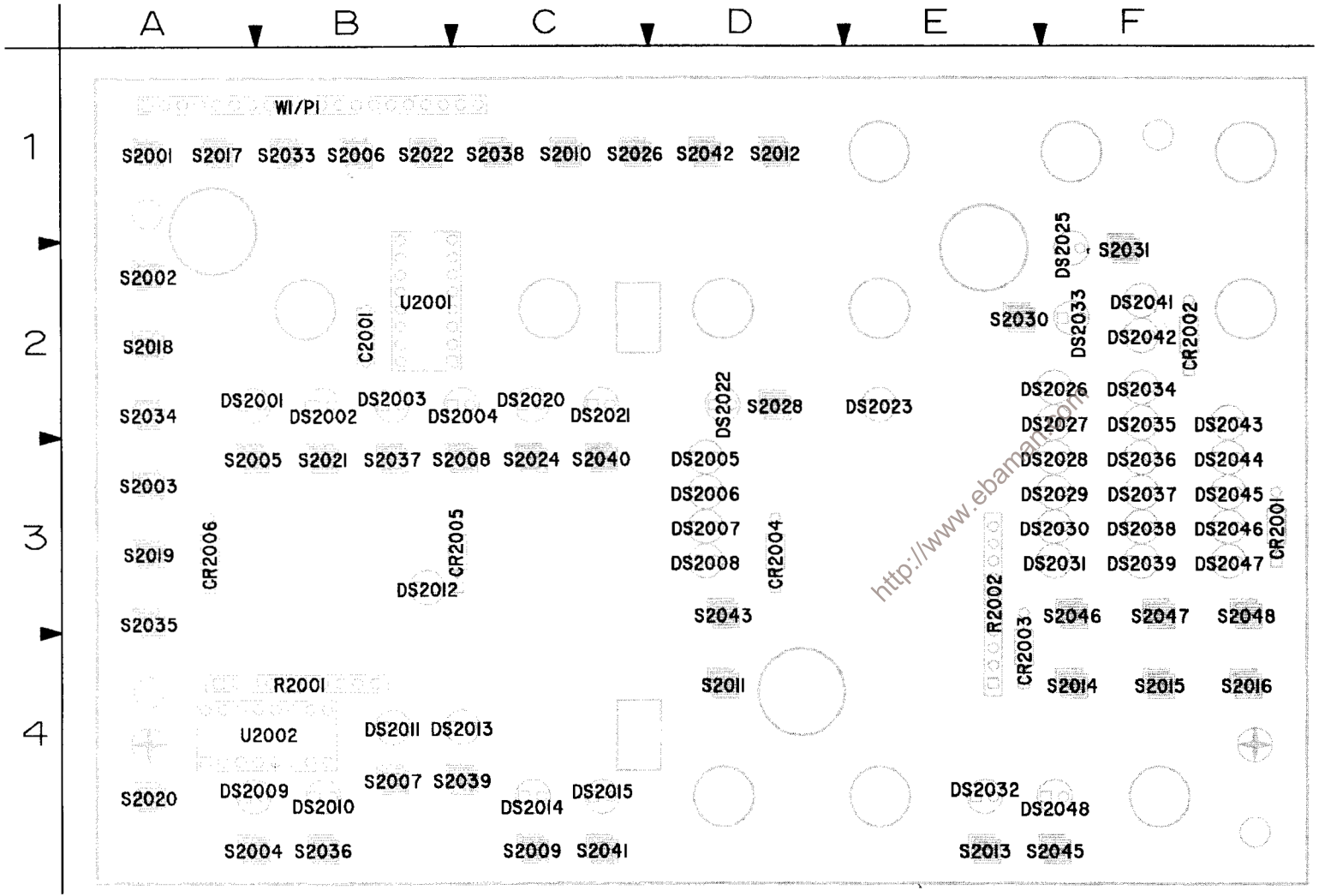

6081-37

Figure 9-9. A14—Switch board.

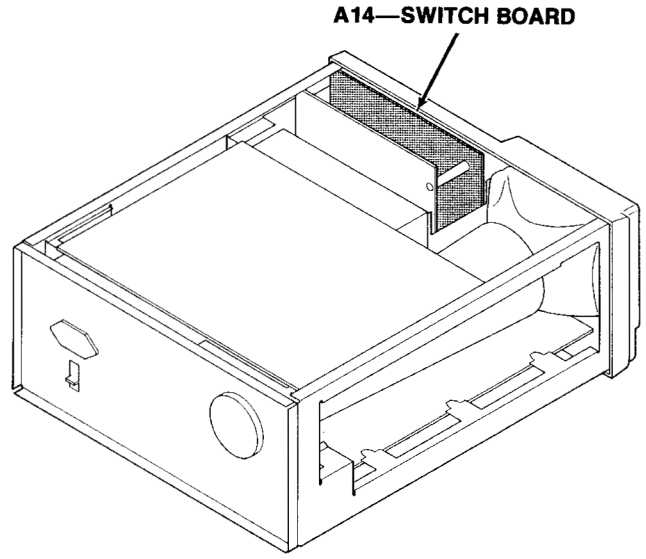

A14—SWITCH BOARD

CIRCUIT NUMBER	SCHEM NUMBER	CIRCUIT NUMBER	SCHEM NUMBER	CIRCUIT NUMBER	SCHEM NUMBER
C2001	14	DS2033	10	S2015	10
		DS2034	10	S2016	10
CR2001	10	DS2035	10	S2017	10
CR2002	10	DS2036	10	S2018	10
CR2003	10	DS2037	10	S2019	10
CR2004	10	DS2038	10	S2020	10
CR2005	10	DS2039	10	S2021	10
CR2006	10	DS2041	10	S2022	10
		DS2042	10	S2024	10
DS2001	10	DS2043	10	S2026	10
DS2002	10	DS2044	10	S2028	10
DS2003	10	DS2045	10	S2030	10
DS2004	10	DS2046	10	S2031	10
DS2005	10	DS2047	10	S2033	10
DS2006	10	DS2048	10	S2034	10
DS2007	10			S2035	10
DS2008	10	P2501	10	S2036	10
DS2009	10	P2501	14	S2037	10
DS2010	10			S2038	10
DS2011	10	R2001	10	S2039	10
DS2012	10	R2002	10	S2040	10
DS2013	10			S2041	10
DS2014	10	S2001	10	S2042	10
DS2015	10	S2002	10	S2043	10
DS2020	10	S2003	10	S2045	10
DS2021	10	S2004	10	S2046	10
DS2022	10	S2005	10	S2047	10
DS2023	10	S2006	10	S2048	10
DS2025	10	S2007	10		
DS2026	10	S2008	10	U2001	10
DS2027	10	S2009	10	U2001	14
DS2028	10	S2010	10	U2002	10
DS2029	10	S2011	10	U2002	14
DS2030	10	S2012	10		
DS2031	10	S2013	10	W2501	10
DS2032	10	S2014	10	W2501	14

A14—SWITCH BOARD

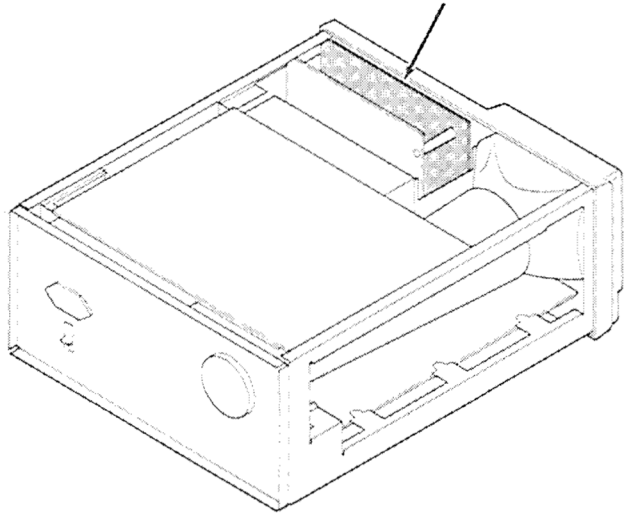

WAVEFORMS FOR DIAGRAM 10

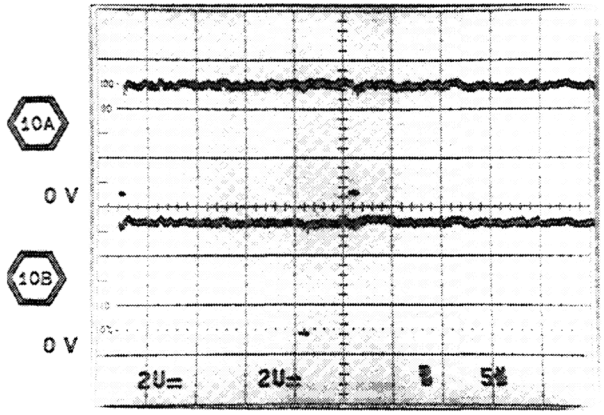

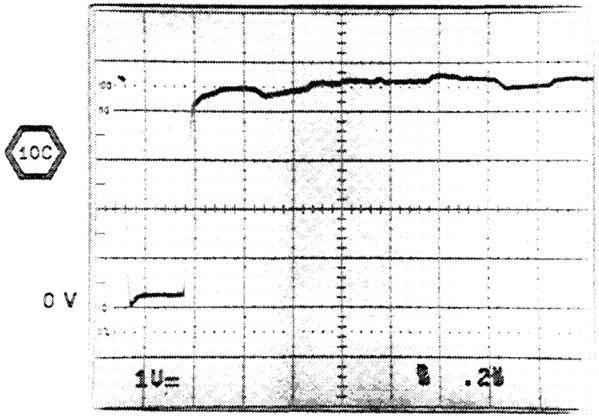

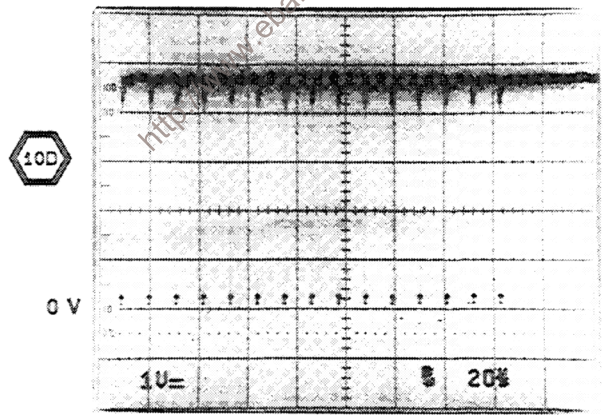

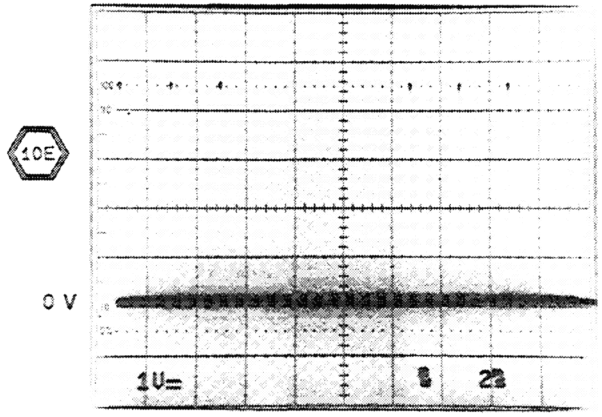

http://www.ebaman.com

LED ANODE AND SWITCH REGISTER

LED & SWITCH COLUMN DRIVERS

LED CATHODE REGISTER & DRIVER

SWITCH BOARD SHIFT REGISTERS

FRONT PANEL LEDS

FRONT PANEL SWITCHES

SWITCH BOARD AND INTERFACE

CIRCUIT NUMBER	+5V	GND
U2001	16	8
U2002	16	8
U2523	20	10
U2524	20	10
U2525	20	10

WAVEFORMS

Static Sensitive Devices
See Maintenance Section

FOR INTEGRATED CIRCUIT SUPPLY CONNECTIONS AND POWER SUPPLY DECOUPLING NETWORKS SEE: PROCESSOR BOARD POWER DISTRIBUTION ◇14

PARTIAL A16 PROCESSOR BOARD

PARTIAL A14 SWITCH BOARD

2245A

6557-59

http://www.ebaman.com

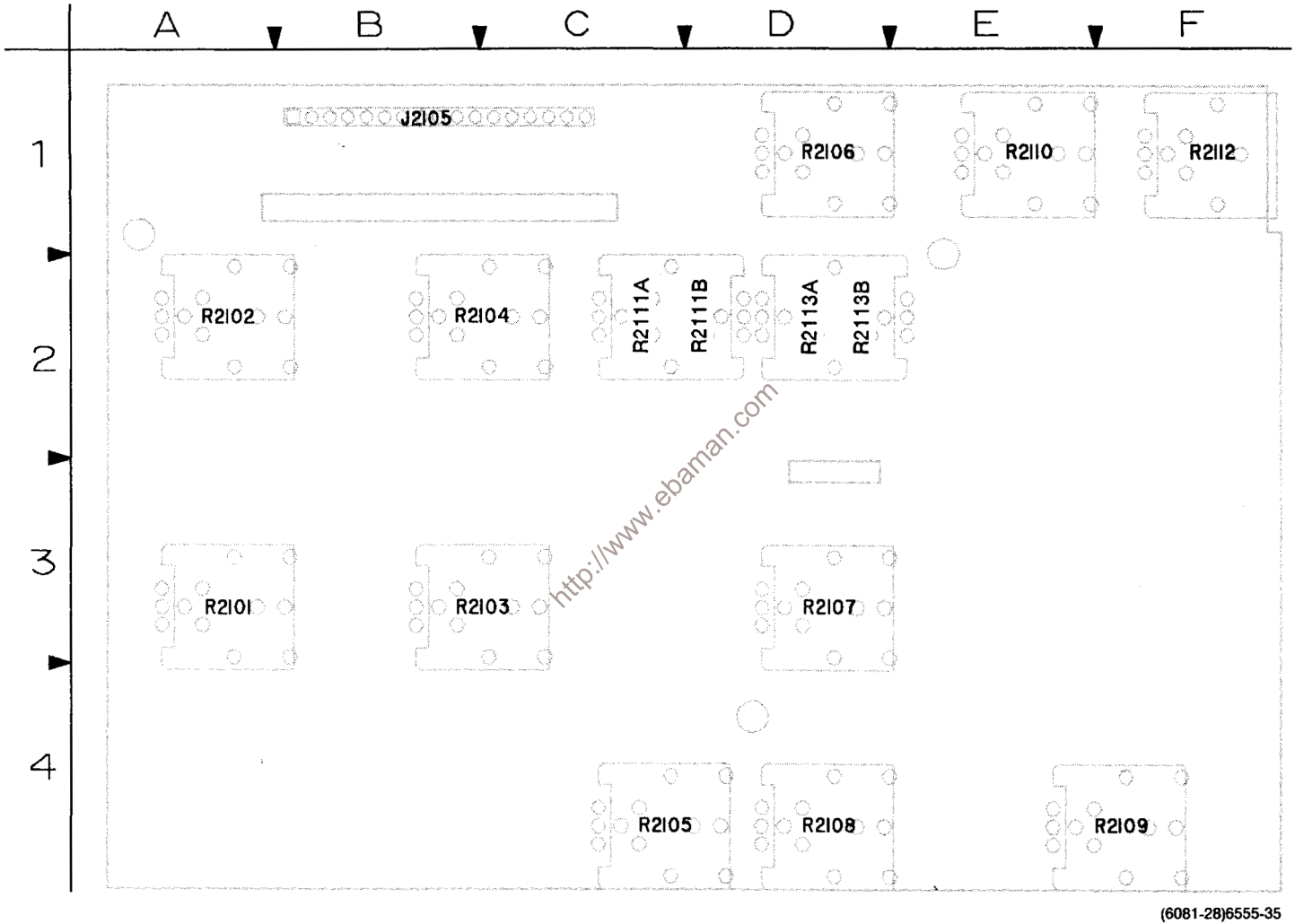

http://www.ebaman.com

Figure 9-10. A12—Potentiometer board.

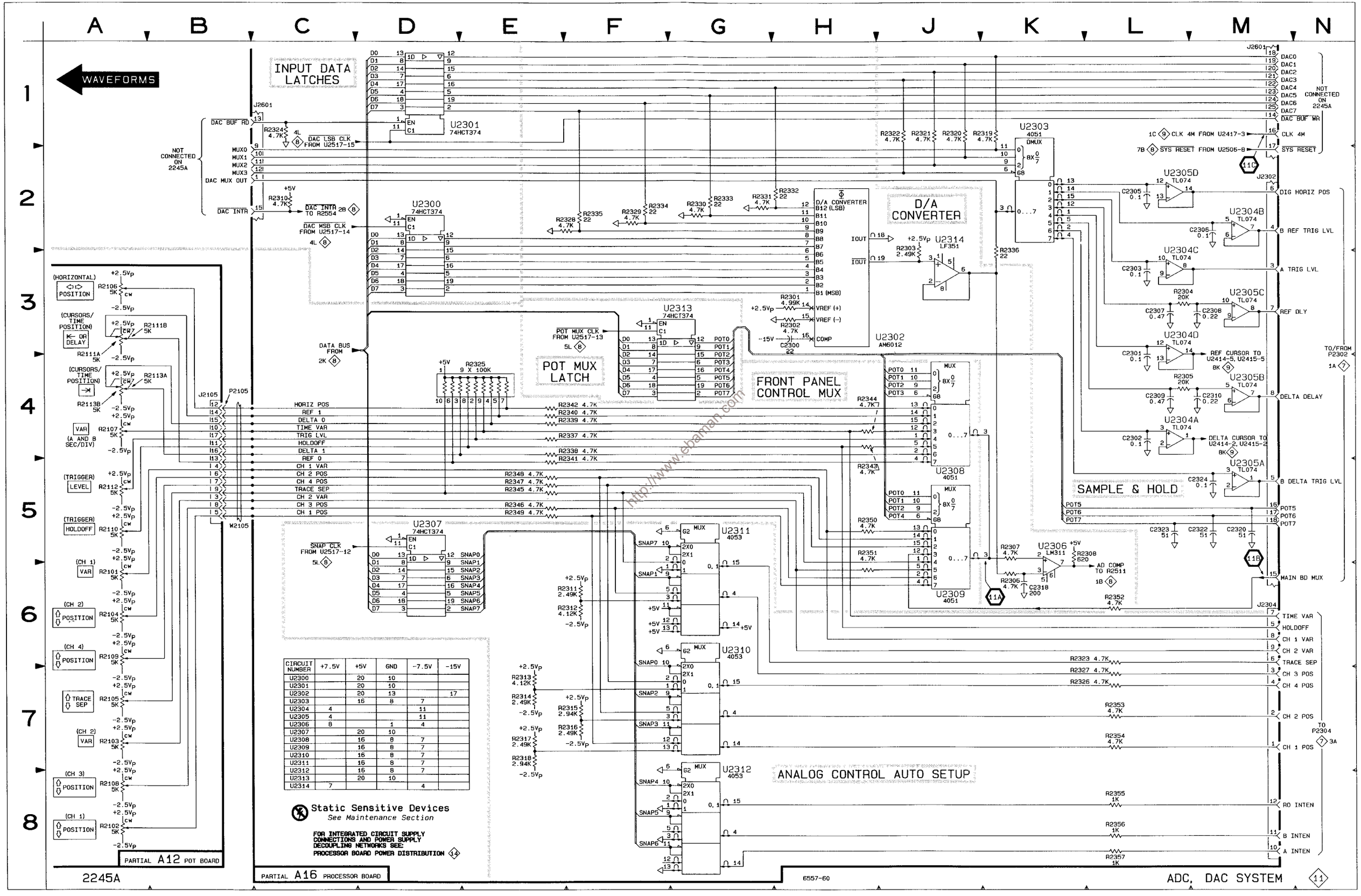

CIRCUIT NUMBER	+7.5V	+5V	GND	-7.5V	-15V
U2300		20	10		
U2301		20	10		
U2302		20	13		17
U2303		16	8	7	
U2304	4			11	
U2305	4			11	
U2306	8		1	4	
U2307		20	10		
U2308		16	8	7	
U2309		16	8	7	
U2310		16	8	7	
U2311		16	8	7	
U2312		16	8	7	
U2313		20	10		
U2314	7			4	

Static Sensitive Devices
See Maintenance Section

FOR INTEGRATED CIRCUIT SUPPLY CONNECTIONS AND POWER SUPPLY DECOUPLING NETWORKS SEE: PROCESSOR BOARD POWER DISTRIBUTION 14

http://www.ebaman.com

A12—POT BOARD

CIRCUIT NUMBER	SCHEM NUMBER	CIRCUIT NUMBER	SCHEM NUMBER	CIRCUIT NUMBER	SCHEM NUMBER
J2105	11	R2104	11	R2110	11
J2105	14	R2105	11	R2111	11
		R2106	11	R2112	11
R2101	11	R2107	11	R2113	11
R2102	11	R2108	11		
R2103	11	R2109	11		

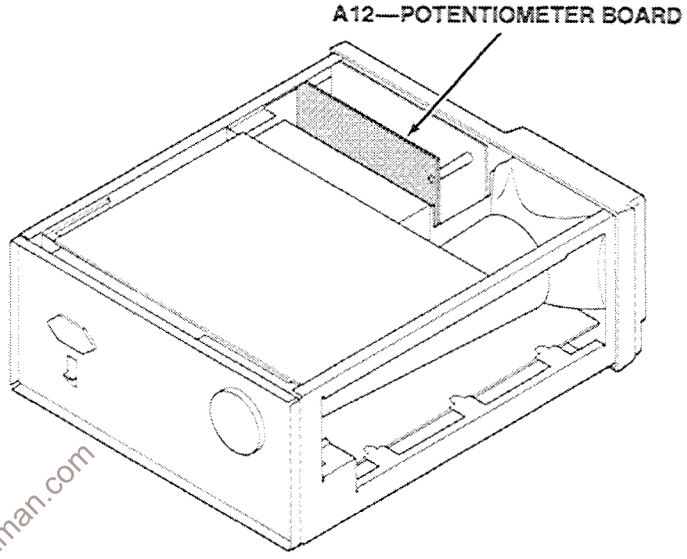

http://www.ebaman.com

WAVEFORMS FOR DIAGRAM 11

11A

−2.5 V

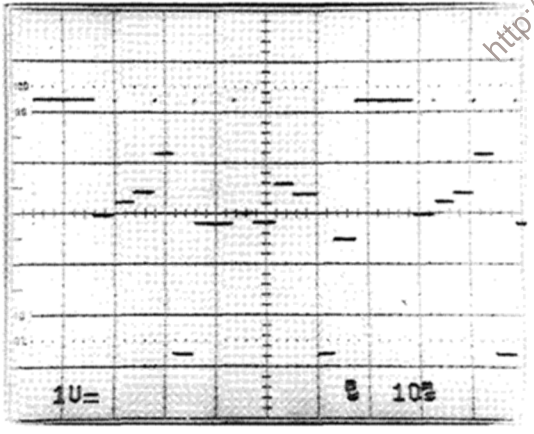

11B

−.3 V

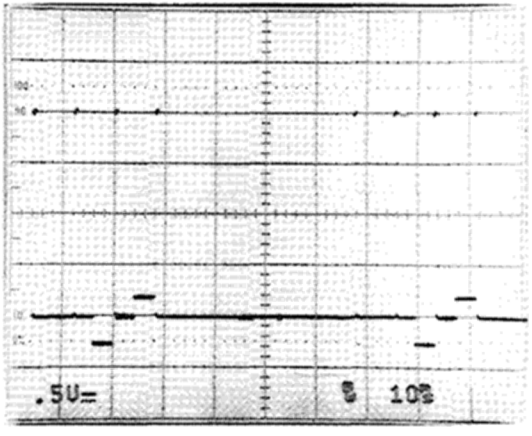

(6555-73)6557-48

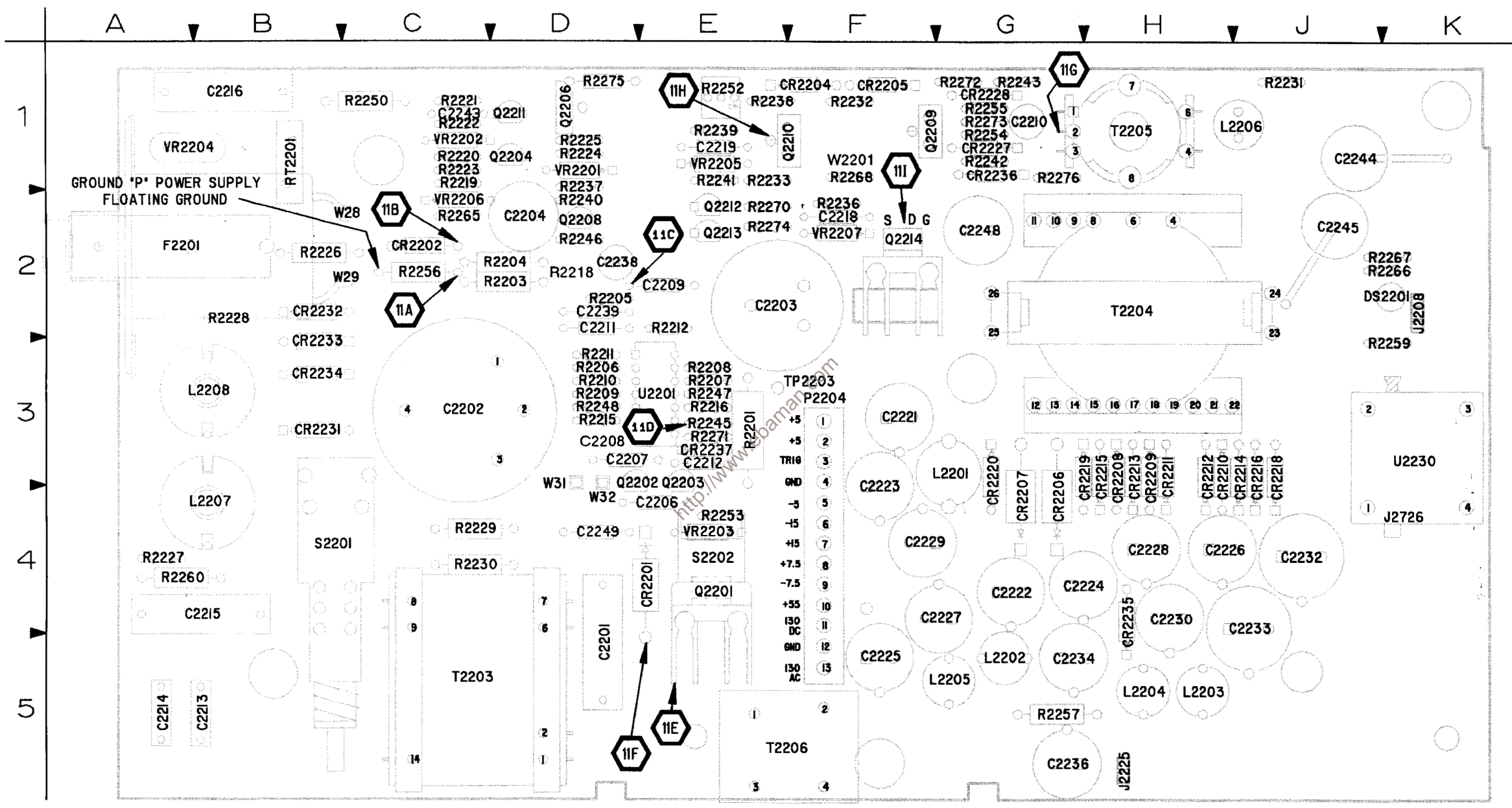

Figure 9-11. A18—Power Supply board.

WAVEFORMS FOR DIAGRAM 12

12A

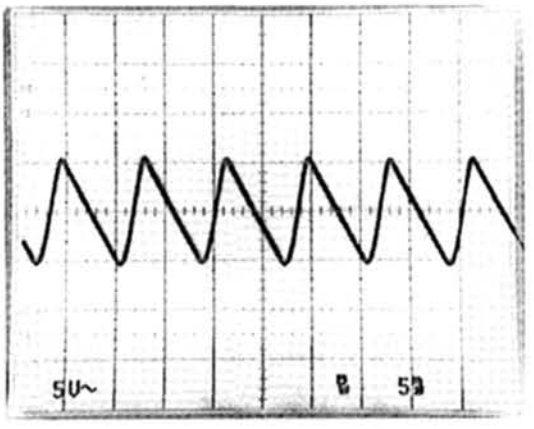

12B

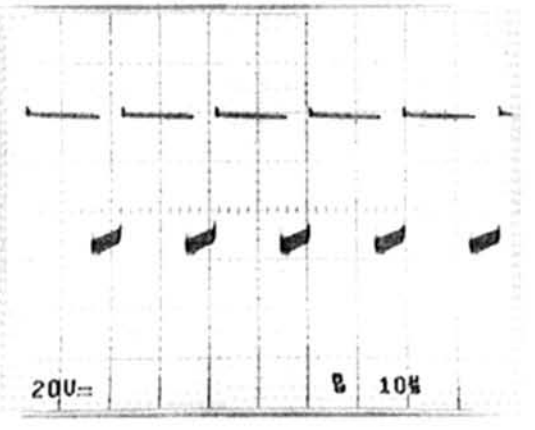

12C

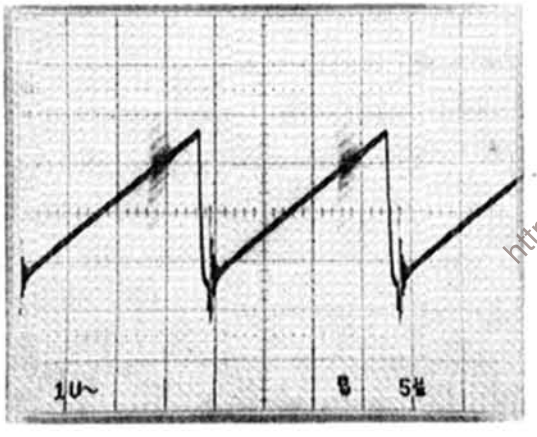

12D

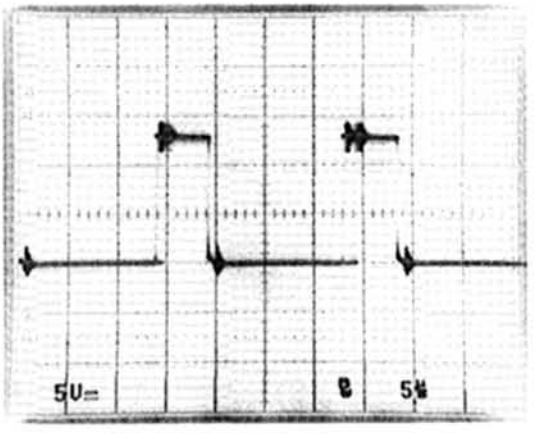

12E

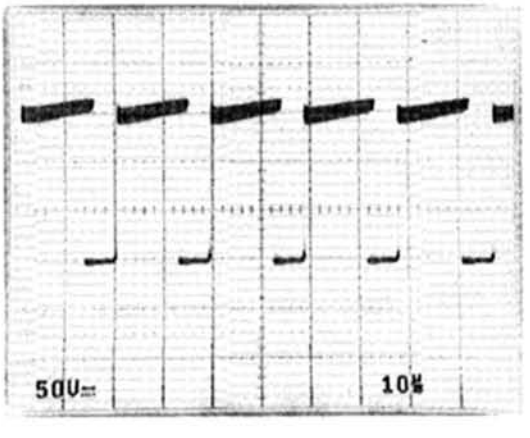

12F

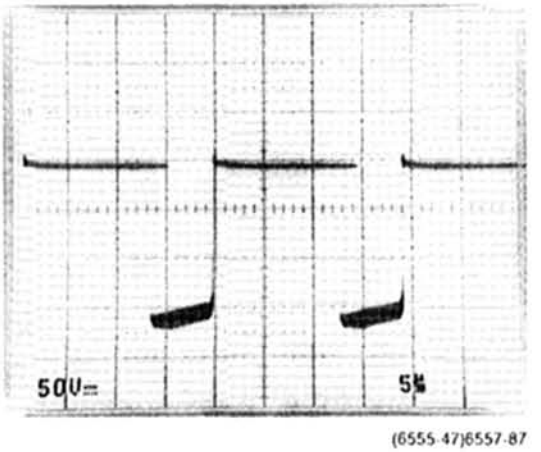

http://www.ebaman.com

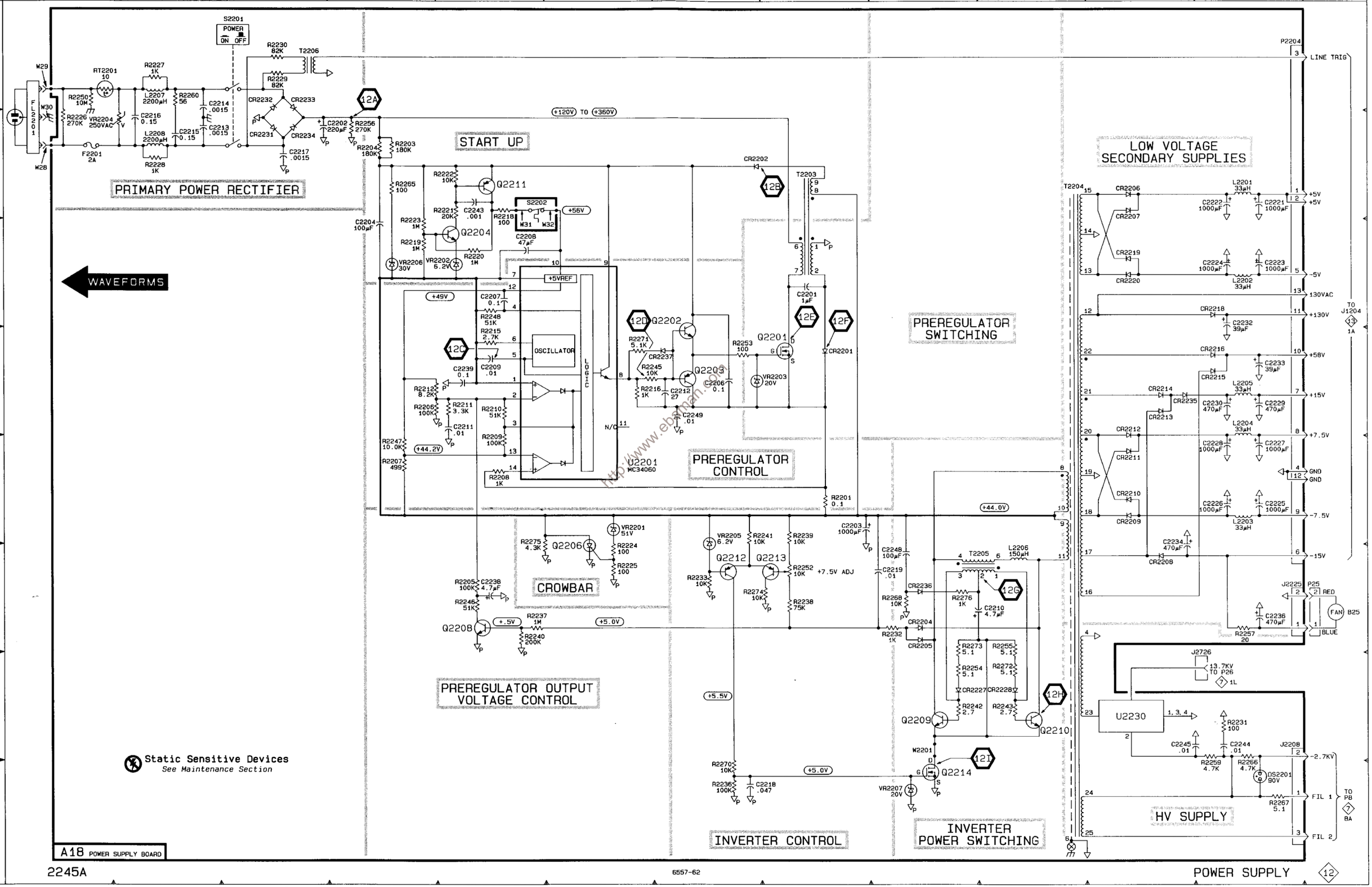

PRIMARY POWER RECTIFIER
START UP
LOW VOLTAGE SECONDARY SUPPLIES
WAVEFORMS
PREREGULATOR SWITCHING
PREREGULATOR CONTROL
CROWBAR
PREREGULATOR OUTPUT VOLTAGE CONTROL
INVERTER CONTROL
INVERTER POWER SWITCHING
HV SUPPLY
Static Sensitive Devices
See Maintenance Section
A18 POWER SUPPLY BOARD
2245A
6557-62
POWER SUPPLY

WAVEFORMS FOR DIAGRAM 12 (cont)

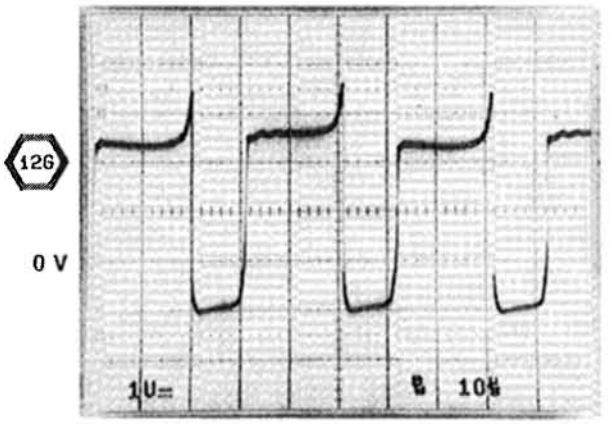

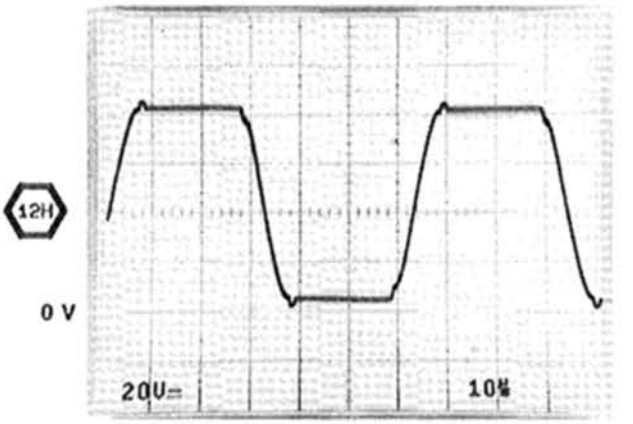

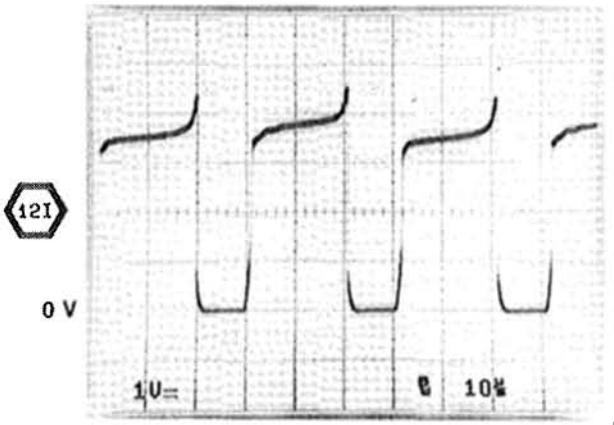

http://www.ebaman.com

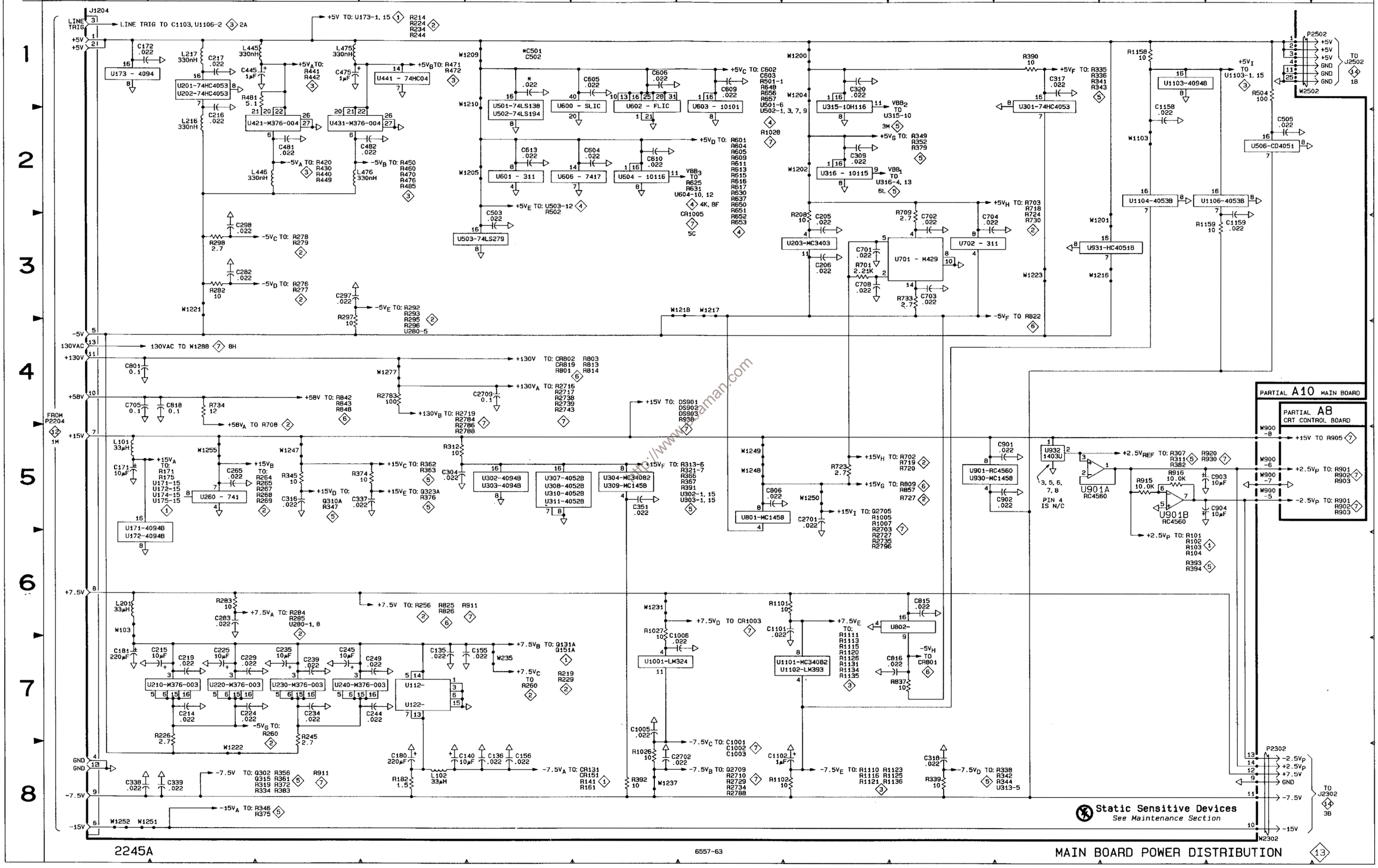

2245A

6557-63

MAIN BOARD POWER DISTRIBUTION

13

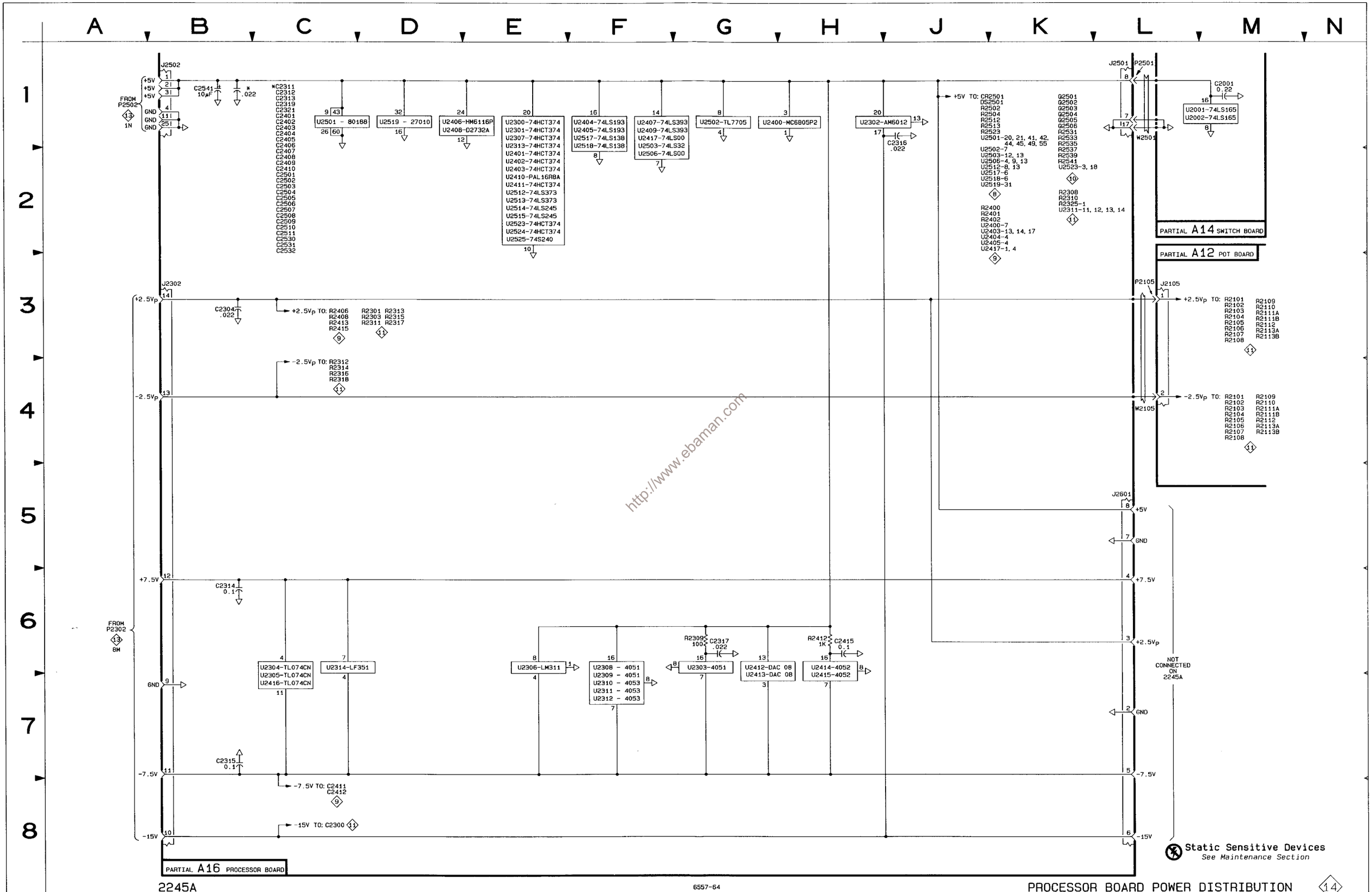

http://www.ebaman.com

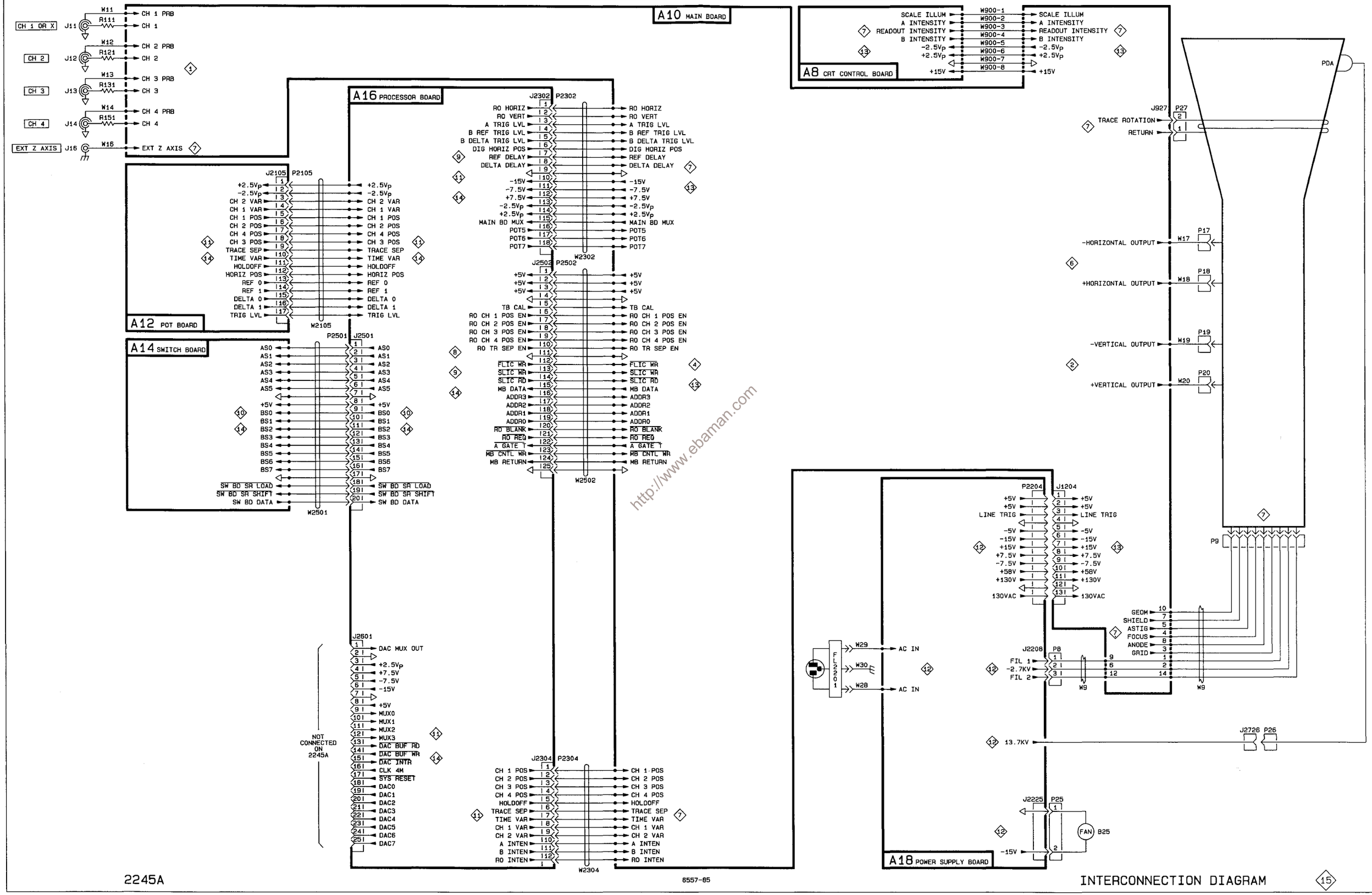

http://www.ebaman.com

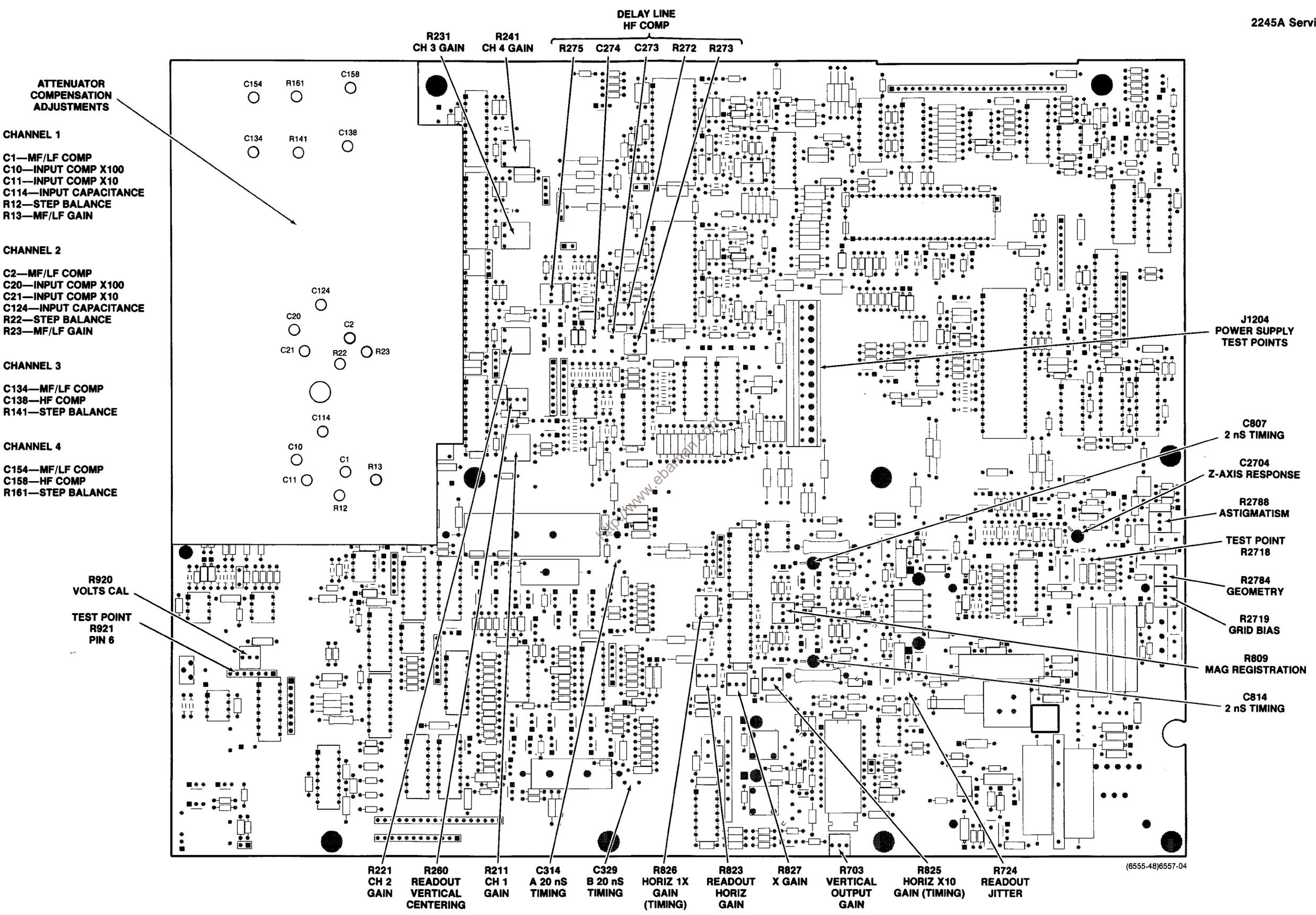

Figure 9-12. A10—Main board adjustment locations.

VOLTAGE/WAVEFORM SETUP CONDITIONS

WAVEFORMS

Test waveforms are shown on a page just before the schematic diagram to which they apply. Normal control settings for the test oscilloscope are given in the readouts shown in each waveform illustration. Unless otherwise indicated near the waveform, setup conditions for the oscilloscope under test are as follows:

1. Set up the 2245A front-panel controls as follows:

VERTICAL MODE	CH 1 (other channels off)
CH 1 COUPLING	DC
CH 1 VOLTS/DIV	0.1 V
VERTICAL POSITION Controls	12 o'clock
SCOPE BW	On
HORIZONTAL MODE	A
A/B SELECT	A
SEC/DIV	0.1 ms
Trigger LEVEL	12 o'clock
HOLDOFF	MIN (CCW)
SLOPE	⌐
Trigger MODE	AUTO LEVEL
Trigger SOURCE	VERT
Trigger COUPLING	DC
MEASUREMENTS	OFF
A INTEN	10 o'clock
READOUT	12 o'clock
FOCUS	For well defined display
SCALE ILLUM	Fully CCW

2. Connect the front-panel PROBE ADJUST output to the Channel 1 input connector.

3. For all waveforms, except those obtained from the Low-Voltage Power Supply, connect the test oscilloscope probe ground wire to the chassis. When obtaining waveforms from the power supply, first connect the power cord of the 2245A under test through an isolation transformer, then connect probe ground wire to ground "P" (rear side of R2256). See Figure 9-11 to locate ground "P".

WARNING

To avoid electric shock and instrument damage, always connect the power cord of the instrument under test through an isolation transformer when viewing waveforms or measuring voltages in the Low-Voltage Power Supply.

DC VOLTAGES

Dc voltages shown on the schematic diagrams are typical of a normally operating instrument. Voltages are referenced to chassis ground, except in the isolated portion of the Low-Voltage Power Supply where they are referenced to ground "P" (at R2256 as shown in Figure 9-11). Make sure that the DMM leads are floating (isolated from chassis ground) when measuring voltages in this section.

http://www.ebamen.com

TEST EQUIPMENT

The following test equipment is recommended for obtaining waveforms and voltages from the 2245A Oscilloscope. Other similar equipment types can also be used.

1. Test Oscilloscope with 10X probe(s)—TEKTRONIX 2246A.

2. Digital Voltmeter—TEKTRONIX DM 501A.

3. Power-Line Isolation Transformer—Tektronix Part No. 006-5953-00.

OTHER PARTS

http://www.ebaman.com

CIRCUIT NUMBER	SCHEM NUMBER	SCHEM LOCATION	CIRCUIT NUMBER	SCHEM NUMBER	SCHEM LOCATION	CIRCUIT NUMBER	SCHEM NUMBER	SCHEM LOCATION
B25	12	6N	P25	12	6N	S2202	12	3E
			P26	7	1L			
FL2201	12	2A	P27	7	2L	V1	7	1M
J16	7	7A						

VERTICAL INPUTS DIAGRAM 1

ASSEMBLY A10

CIRCUIT NUMBER	SCHEM LOCATION	BOARD LOCATION	CIRCUIT NUMBER	SCHEM LOCATION	BOARD LOCATION	CIRCUIT NUMBER	SCHEM LOCATION	BOARD LOCATION
AT117	1J	6B	J11	1A	6A	R132	6H	2A
AT127	3H	4B	J12	4A	4A	R133	6H	2A
			J13	7A	3A	R134	7H	2A
C1	1K	6C	J14	8A	1A	R135	7J	2B
C2	4K	4C				R136	7K	2C
C10	2H	6B	K100	1F	6A	R137	7K	2C
C11	2J	6B	K101	1G	5A	R139	7L	2C
C20	4H	4B	K102	1G	5B	R141	7J	2B
C21	5J	4B	K103	1H	6B	R142	7J	2B
C101	1B	6A	K104	2L	5D	R151	8A	2A
C102	3B	4A	K105	2K	5D	R152	8H	1A
C103	7B	3A	K107	4F	4A	R153	8H	1A
C104	8B	1A	K108	4G	4A	R154	8H	1A
C105	1F	6A	K109	4G	4B	R155	8J	1B
C106	2G	5A	K110	4H	5B	R156	8K	1C
C107	4F	5A	K111	5L	4D	R157	8K	1C
C108	5G	4A	K112	5K	4D	R159	8L	1C
C111	1B	9C				R161	8J	1B
C112	1F	6A	L130	7L	2C	R162	8J	1B
C113	1F	5A	L140	8L	1C	R171	5B	3B
C114	2J	5C				R175	5B	3B
C121	3B	10C	Q131A	7K	2B	R176	6C	3C
C122	4F	4A	Q131B	7J	2B	R177	6C	2C
C123	4F	3A	Q151A	8K	1B	R178	6E	2C
C124	4J	4C	Q151B	8J	1B	R179	6E	3C
C125	4B	1C	Q171	5C	2B	R180	6J	2B
C126	7F	1D				R181	8J	1B
C131	7B	10B	R12	2K	6C			
C132	7H	2A	R13	2K	6C	U112	1L	6C
C133	7J	2A	R22	4K	4C	U122	4L	4C
C134	7J	2B	R23	4K	4C	U171	4C	3B
C137	7L	2C	R101	1B	6A	U172	5D	3B
C138	7K	2C	R102	3B	7A	U173	6E	3C
C151	8B	10C	R103	7B	7A	U174	1E	3A
C152	8H	1A	R104	7B	7A	U175	4E	3C
C153	8J	1A	R105	1B	7A			
C154	8J	1B	R106	3B	7A	W11	1B	6A
C157	8L	1C	R107	7B	7B	W12	3A	4A
C158	8K	1C	R108	8B	7B	W13	7A	3A
C173	5C	3B	R111	1A	6A	W14	7A	1A
C190	7L	2C	R113	1G	5A	W100	4F	5C
C191	8L	1C	R114	1F	5A	W101	5G	5C
			R121	3A	4A	W102	5G	3B
CR131	6H	2B	R123	3G	3A			
CR151	8H	1B	R124	3F	3A			
CR171	5B	3B	R131	7A	2A			

Partial A10 also shown on diagrams 2, 3, 4, 5, 6, 7 and 13.

http://www.obamari.com

VERTICAL PREAMPS AND OUTPUT AMPLIFIER DIAGRAM 2

ASSEMBLY A10

CIRCUIT NUMBER	SCHEM LOCATION	BOARD LOCATION	CIRCUIT NUMBER	SCHEM LOCATION	BOARD LOCATION	CIRCUIT NUMBER	SCHEM LOCATION	BOARD LOCATION	CIRCUIT NUMBER	SCHEM LOCATION	BOARD LOCATION
C139	4C	2C	Q251	4G	4F	R250C	5E	5E	R711	3L	9J
C159	5C	1C	Q252	3J	4E	R250D	3E	5E	R712	4L	10J
C201	7C	4G	Q253	4J	4F	R250E	2E	5E	R715	1L	10K
C202	7C	4G	Q284	6F	5E	R250F	1E	5E	R716	2L	9K
C203	7C	4H	Q285	6F	5E	R250G	5F	5E	R717	2M	9K
C204	8C	5H	Q701	3M	9H	R251A	4H	5F	R718	1M	9K
C210	1C	6D	Q702	4M	10H	R251B	5H	5F	R719	3M	9H
C211	2D	5E	Q703	2M	9K	R251C	5E	5F	R720	4M	10H
C212	1E	5E	Q704	6K	10H	R251D	4E	5F	R721	1L	9K
C213	2E	5E				R251E	2E	5F	R722	2L	9K
C218	6B	9G	R115	1D	5D	R251F	1E	5F	R724	4K	9K
C220	3C	4D	R125	2D	4D	R251G	5F	5F	R725	4K	9K
C221	3D	4E	R138	4C	2C	R254	3G	5F	R726	6K	10J
C222	3E	4E	R140	4D	2C	R255	3G	5F	R727	5K	10J
C223	3E	4E	R158	5C	1C	R256	2G	6F	R728	5K	10H
C228	7B	10G	R160	5D	1C	R260	7G	5E	R729	5K	10H
C232	4E	2E	R201	6E	5G	R261	7G	5E	R730	5K	9K
C233	5E	2E	R202	7E	5G	R262	3F	5F	R731	3M	9H
C238	7B	10H	R203	8E	5G	R263	4F	5F	R732	4M	10H
C242	5E	1E	R204	8E	5G	R264	3F	5F			
C243	6E	1E	R205	7D	5G	R265	4F	5F	U201	8D	5H
C248	8B	10H	R206	8E	5G	R266	2G	4F	U202	7D	5G
C258	8C	4H	R207	7C	9G	R267	2G	4F	U203A	6B	10G
C268	7D	9G	R209	7C	5H	R268	4J	5F	U203B	7B	10G
C271	3H	3F	R210	1E	5E	R269	2J	5F	U203C	7B	10G
C272	3H	4F	R211	1E	5E	R270	3J	4F	U203D	8B	10G
C273	3H	4F	R212	2C	3L	R271	4H	3F	U210	1D	5D
C274	3H	4F	R213	2C	4M	R272	3H	4F	U220	2D	4D
C275	4G	4F	R214	2C	5H	R273	3H	4F	U230	3D	3E
C491	2E	2F	R215	7C	6M	R274	3J	3E	U240	5D	2E
C492	3E	2F	R218	2C	5E	R275	3G	4E	U260	2F	5F
C493	4E	2F	R219	1C	5C	R276	4G	4F	U280	8F	5F
C494	6E	2F	R220	2E	4E	R277	3G	3F	U701	2L	9J
C706	3L	10H	R221	2E	4E	R278	3J	3E	U702	1M	9K
C707	6L	9J	R222	3C	3M	R279	4J	3F	U801B	8B	7H
C711	3L	9J	R223	3C	4M	R280	3J	3F			
C712	4L	10J	R224	3C	5H	R281	4J	3F	W19	4M	10H
C811	8B	6J	R225	1C	8C	R284	6E	6E	W20	3M	9H
			R227	2C	8C	R285	6G	5E	W200	3C	5G
CR201	2C	5C	R228	3C	4E	R286	7F	5G	W201	2C	5G
CR202	1C	5C	R229	1C	5D	R287	7F	5F	W202	7E	4G
CR260	3J	4F	R230	4E	3E	R288	7G	6F	W203	7D	5H
CR261	4J	4F	R231	4E	3E	R289	6G	5F	W205	7B	5G
			R232	5C	3L	R290	7F	5F	W206	6B	5G
DL21	3K	3F	R233	5C	4M	R291	7F	5F	W207	7B	5G
DL21	3K	9J	R234	4C	5H	R292	8E	5F	W208	8B	5G
			R235	5D	3E	R293	8F	5F	W209	8C	5G
L701	5L	9J	R238	5C	2D	R294	8G	4F	W210	8B	10G
L702	6L	10J	R240	5E	2E	R295	8G	5F	W223	3C	4D
L703	3M	9H	R241	5E	2E	R296	7F	5F	W231	4E	2E
L704	4M	10H	R242	6C	3M	R702	5K	9J	W232	4E	2E
			R243	6C	4L	R703	5K	10J	W415A	1E	4E
P19	4N	10H	R244	6C	5H	R706	3K	9K	W415B	1E	2F
P20	3N	9H	R248	6D	2E	R707	4K	10K	W416A	3E	3E
			R250A	2H	5E	R708	3M	9H	W416B	3E	2E
Q250	3G	4E	R250B	3H	5E	R710	1L	10K	W815	8B	8G

Partial A10 also shown on diagrams 1, 3, 4, 5, 6, 7 and 13.

http://www.ebanner.com

A AND B TRIGGER SYSTEM DIAGRAM 3

ASSEMBLY A10

CIRCUIT NUMBER	SCHEM LOCATION	BOARD LOCATION	CIRCUIT NUMBER	SCHEM LOCATION	BOARD LOCATION	CIRCUIT NUMBER	SCHEM LOCATION	BOARD LOCATION	CIRCUIT NUMBER	SCHEM LOCATION	BOARD LOCATION
C421	1H	4G	Q1102	4F	1N	R475	7L	1G	R1154	6F	1M
C422	2H	4H	Q1103	5F	1N	R476	8M	1F	R1155	6G	1M
C423	2H	4G	Q1104	3E	2M	R477	8M	2H	R1162	5A	1K
C424	2H	4G	Q1105	3F	2N	R478	8L	2H	R1163	5A	2K
C425	2J	3G	Q1106	3F	2N	R483	3B	1G	R1170	3A	1K
C426	2E	2H				R484	8L	1F			
C432	1L	3H	R410	1M	3F	R485	8L	1F	U421A	1D	3G
C444	2L	3G	R411	1M	4F	R486	8L	1F	U421B	1K	3G
C447	3M	3G	R412	2M	4F	R487	8L	1F	U421C	1M	3G
C451	6H	2G	R413	2M	4G	R490	3B	3J	U431A	7D	2G
C452	7H	2H	R414	6M	2F	R491	4B	3J	U431B	6K	2G
C453	8H	2G	R415	6M	2G	R492	4B	3J	U431C	6M	2G
C454	7H	2G	R416	6M	2F	R493	4B	3J	U441A	4K	2H
C455	6J	2G	R417	6M	2F	R494	7B	3J	U441B	5K	2H
C462	6L	1H	R420	2E	4G	R495	7B	2J	U441C	7K	2H
C463	6L	1H	R421	1H	4H	R496	8B	2J	U441D	4K	2H
C474	6L	1G	R422	2H	4H	R497	8B	2J	U441E	2K	2H
C477	8M	1G	R423	2H	4G	R498	3B	3J	U441F	1K	2H
C483	3B	1F	R424	2H	4G	R607	2N	3J	U1101A	2E	2M
C484	4B	3F	R425	2H	4H	R1103	3D	2M	U1101B	6G	2M
C485	8B	2F	R426	2E	4H	R1104	3E	2M	U1102A	3G	1L
C486	8B	2F	R430	2K	3H	R1110	5E	1N	U1102B	3H	1L
C487	3B	3F	R431	1K	3H	R1111	4E	1N	U1103	5B	2K
C488	8B	2F	R432	2L	3H	R1112	4E	1N	U1104A	3J	2M
C489	4B	3F	R440	1L	3H	R1113	4F	1N	U1104B	4G	2M
C611	2N	3J	R441	1L	3H	R1114	4F	1N	U1104C	4J	2M
C1103	3A	3J	R442	1L	3H	R1115	4F	1N	U1106A	2B	2J
C1105	3E	2N	R443	1L	2H	R1116	5F	1N	U1106B	8J	2J
C1106	3H	2L	R444	2L	2H	R1117	4F	1N	U1106C	6H	2J
C1107	3H	2L	R445	2L	3H	R1118	5F	1N			
C1110	3E	2M	R446	2M	2G	R1120	3E	2N	W401	2E	2H
C1111	3H	1L	R447	3M	3H	R1121	4E	2M	W403	6J	1J
C1114	5E	1N	R448	3L	3H	R1122	3E	2N	W404	6F	1H
C1130	4G	2L	R449	2M	3H	R1123	4F	2M	W405	8L	1J
C1154	6F	1M	R450	6E	2G	R1124	4F	2N	W406	3J	2H
C1155	6G	2M	R451	7H	2H	R1125	3F	2N	W407	3J	2J
			R452	7H	2H	R1126	3F	2N	W408	3J	1J
CR432	1L	3H	R453	8H	2G	R1127	4F	2N	W410	3L	3J
CR462	6K	1H	R454	7H	2F	R1128	3F	2N	W411	2E	2J
			R455	6E	2H	R1131	3G	1L	W412	2E	1J
L426	2E	4H	R456	6F	2H	R1132	3H	2L	W413	1M	3J
L432	2L	3H	R460	6K	2H	R1133	3H	2L	W414	2M	3J
L462	6K	1H	R461	6K	2H	R1134	3J	1M	W1101	5C	2K
			R462	6L	1H	R1135	4G	2M	W1102	3K	2K
Q440	1L	3H	R463	6L	1H	R1136	4G	1N	W1104	5A	1K
Q444	2L	3G	R470	6L	2H	R1142	3H	1L	W1105	4H	1K
Q470	5L	1H	R471	5L	1H	R1143	4H	1L	W1106	8J	2K
Q474	7L	1G	R472	5L	2H	R1144	3J	1M	W1107	4H	2K
Q480	8L	1F	R473	6K	2H	R1145	3J	1M	W1120	6H	2K
Q1101	5E	1M	R474	6K	1H	R1150	2D	1M			

Partial A10 also shown on diagrams 1, 2, 4, 5, 6, 7 and 13.

http://www.ebaman.com

DISPLAY AND TRIGGER LOGIC AND PROCESSOR INTERFACE DIAGRAM 4

ASSEMBLY A10

CIRCUIT NUMBER	SCHEM LOCATION	BOARD LOCATION	CIRCUIT NUMBER	SCHEM LOCATION	BOARD LOCATION	CIRCUIT NUMBER	SCHEM LOCATION	BOARD LOCATION
C600	8J	4K	R616	6F	4K	R664	6J	2K
C601	8J	5K	R617	6F	4K	R665	5H	3J
C602	1H	3K	R618	6F	4K	R666	5J	3J
C603	1H	2K	R619	6F	4L	R669	3H	3M
C607	6J	4L	R620	5F	4K	R670	4J	5M
C608	6K	4L	R621	5G	4L	R671	6K	4L
C612	2G	2K	R622	6G	5K	R672	6J	4K
			R623	6G	5K			
CR603	5J	3J	R624	4K	5N	U501	3C	3N
			R625	4K	5N	U502	4D	3N
DL22	2F	2L	R626	1H	3L	U503	3D	5N
DL22	2F	2G	R627	1H	2L	U600	3L	4L
			R628	4H	4N	U601	8K	5K
P2502	2M	1L	R630	6L	5M	U602	1G	3K
P2502	4A	1L	R631	4K	6N	U603A	2H	3M
			R636	8H	5K	U603B	3H	3M
Q600	8J	5J	R637	8H	4J	U603C	1H	3M
Q601	8J	5K	R638	8J	4J	U603D	2H	3M
Q602	3K	4M	R639	1H	3N	U604A	4K	5M
Q603	3K	4M	R640	2H	3N	U604B	7F	5M
Q604	2K	4M	R641	5H	4J	U604C	8F	5M
Q605	2K	4M	R642	5J	4K	U606A	5E	5M
Q606	2K	4M	R643	5H	3J	U606B	3D	5M
Q607	2K	4M	R644	5J	2K	U606C	4E	5M
Q608	6K	4L	R645	6H	2K	U606D	2L	5M
			R646	4K	5M	U606E	2L	5M
R501	6B	3M	R647	5F	1K	U606F	2D	5M
R502	4E	5N	R648	5F	2J			
R601	7J	4J	R649	5G	2J	W505	4E	5N
R602	8K	5L	R650	6K	4K	W510	4E	6M
R603	7K	5L	R651	2L	5M	W603	1H	3M
R604	7K	5L	R652	2L	5M	W604	4J	3L
R605	8L	5L	R653	3F	4N	W605	5G	3K
R606	8J	5K	R654	4G	5N	W610	3L	4M
R609	3K	4M	R655	4F	5N	W611	3L	5M
R610	3K	4M	R656	5H	4J	W612	8H	5K
R611	2K	4M	R657	4J	4K	W2502	2M	1L
R612	2K	4M	R658	5H	4J	W2502	8A	1L
R613	2K	4M	R659	5J	3K			
R614	3K	4M	R662	4K	4M	Y600	6K	4L
R615	5F	4K	R663	6H	2K			

Partial A10 also shown on diagrams 1, 2, 3, 5, 6, 7 and 13.

http://www.eleman.com

A AND B SWEEPS AND DELAY COMPARATORS DIAGRAM 5

ASSEMBLY A10

CIRCUIT NUMBER	SCHEM LOCATION	BOARD LOCATION	CIRCUIT NUMBER	SCHEM LOCATION	BOARD LOCATION	CIRCUIT NUMBER	SCHEM LOCATION	BOARD LOCATION
C301	4D	8F	R309	3C	9C	R363	7C	9F
C302	7D	9F	R310	3C	7C	R364	8C	9G
C303	3D	7C	R311	3D	8C	R365	7H	10E
C305	4B	9D	R313A	4D	7C	R366	1A	8C
C306	4A	7C	R313B	3D	7C	R367	2A	8C
C307A	5J	7E	R313C	3D	7C	R370	8C	9G
C307B	5J	7E	R313D	3D	7C	R371	8D	9G
C307C	7J	10F	R314	3D	7C	R372	8D	9G
C308	4H	7D	R315	8K	10E	R373	8C	9G
C310	4J	7E	R316	5D	7F	R375	8K	10E
C311	5C	7F	R317	4B	8E	R376	7K	9E
C312	3J	9E	R318	4C	8E	R377	6L	8G
C313	2J	9E	R319	5B	8F	R378	5M	6J
C314	5J	7F	R320	5K	8E	R379	6L	7G
C315	5J	7G	R321A	6F	8D	R380	6M	6J
C321	7C	9F	R321B	6F	8D	R381	7D	9F
C326	7H	10E	R321C	6F	8D	R382	6L	7G
C329	7J	10F	R321D	3F	8D	R383	8B	9G
C330	7J	9G	R321E	3F	8D	R384	5E	8D
			R321F	3F	8D	R385	1M	8F
CR301	3C	7C	R322	5L	7H	R386	1M	9F
			R323	7L	7G	R387	1M	8F
Q301	3D	7C	R325	4H	7D	R388	3M	8F
Q302	4B	8E	R326	4J	7D	R391	5E	8D
Q303	4C	8E	R327	7C	9F	R393	4H	10E
Q304	4D	8F	R328	3M	8E	R394	6H	10E
Q305	4J	7E	R329	3J	9E	R395	5J	7E
Q306	4J	7D	R330	2J	9E	R396	7J	9E
Q307	3H	8D	R331	3K	8E			
Q308	5D	7F	R332	5C	7G	U301A	1K	8D
Q309	5C	7F	R333	5D	7G	U301C	2K	8D
Q310A	5J	7E	R334	5B	8G	U302	1B	8C
Q310B	5J	7E	R335	3L	8F	U303	2C	9C
Q311	5C	8F	R336	3L	8F	U304A	3H	8D
Q312	5K	7E	R337	2M	8E	U304B	6H	8D
Q313	8D	9F	R338	4L	8E	U307	2F	7D
Q315	6B	9E	R340	6C	7G	U308	2G	7D
Q316	7C	9E	R341	1L	9F	U309A	4A	7C
Q317	7D	9F	R342	2L	9E	U309B	3D	7C
Q318	7J	10E	R343	1L	9F	U310	5F	9D
Q320	6H	9D	R344	4K	8E	U311	5G	9D
Q321	7D	9F	R346	6K	8D	U313	3M	8E
Q322	7C	9F	R347	5K	8E	U315A	1M	8F
Q323A	7J	9E	R348	5L	8H	U315B	4M	8F
Q323B	8J	9E	R349	5L	7G	U315C	2M	8F
Q325	7K	9E	R350A	6M	7H	U316A	6M	7H
Q326	5D	7F	R350B	7M	7H	U316B	6L	7H
Q328	4K	7E	R350C	6L	7H	U316C	6L	7H
Q329	6K	9E	R350E	5L	7H	U316D	6M	7H
Q330	4H	7E	R351	5E	8F			
Q331	6H	9E	R352	6L	7G	VR301	6B	6G
Q332	7B	9F	R354	6B	9E	VR302	5B	6G
Q333	5B	8F	R355	6C	9E	VR303	8B	8G
			R356	7B	9F	VR304	7B	8G
R301	6C	9E	R357B	1M	8F	VR308	7C	9F
R302	4J	7E	R357C	1M	8F	VR309	5C	6G
R303	4C	8F	R357D	3M	8F	VR310	8C	9G
R304	5C	8F	R357E	3M	8F	VR311	6K	8E
R305	5C	7G	R359	2M	8F	VR312	8K	10E
R306	4B	7C	R360	3M	8F			
R307	4A	7C	R361	6D	8G	W304	7K	8G
R308	4A	7C	R362	4C	8F	W802	5K	8G

Partial A10 also shown on diagrams 1, 2, 3, 4, 6, 7 and 13.

http://www.scamari.com

HORIZONTAL OUTPUT AMPLIFIER DIAGRAM 6

ASSEMBLY A10

CIRCUIT NUMBER	SCHEM LOCATION	BOARD LOCATION	CIRCUIT NUMBER	SCHEM LOCATION	BOARD LOCATION	CIRCUIT NUMBER	SCHEM LOCATION	BOARD LOCATION
C319	6B	6F	R369	6B	8D	R845	3H	7J
C802	3K	7K	R801	2K	7K	R846	4K	7J
C803	3J	7J	R802	3L	7K	R847	5G	8J
C804	3G	8J	R803	2J	7J	R848	5H	8K
C805	4K	8J	R804	2J	7J	R849	5H	8K
C807	2H	7J	R805	4H	7J	R850	5G	8J
C808	5B	9G	R806	2H	7J	R851	5H	8J
C809	5K	8K	R807	5B	9G	R852	5K	8K
C810	5J	8J	R808	4D	7H	R853	6J	8J
C814	7H	8J	R809	4D	8H	R854	5E	8H
C817	6C	6G	R810	5E	8H	R855	4E	7H
C819	7L	7J	R811	7D	7H	R856	4E	8H
			R812	7D	8H	R857	4E	8H
CR801	4B	9H	R813	6K	8K	R858	3K	7J
CR802	3L	7K	R814	6J	8J			
CR819	6L	8J	R815	6J	8J	U301B	6B	8D
			R816	7H	8J	U801A	7H	7H
P17	3M	7K	R819	5L	8K	U802	3C	8H
P18	5M	8K	R820	7L	8K			
			R821	7L	7K	VR801	4K	8J
Q801	2K	7J	R822	7L	7K	VR802	3G	8J
Q802	3K	7J	R823	4C	8G			
Q803	3H	7J	R825	7C	8H	W17	3M	7K
Q804	3G	7J	R826	7C	7G	W18	5M	8K
Q805	5K	8J	R827	4C	8H	W305	6B	10D
Q806	6K	8J	R828	3K	7K	W805	5B	6L
Q807	5H	8J	R829	6K	8K	W806	5C	6K
Q808	5H	8J	R836	4C	8H	W807	5B	6L
Q809	5E	8H	R840	2K	7J	W808	5C	6K
Q810	3E	7H	R841	4F	7J	W810	4B	5G
			R842	3F	7J	W811	4B	5H
R353	6B	8D	R843	2G	7K			
R358	6B	8D	R844	2G	7K			

Partial A10 also shown on diagrams 1, 2, 3, 4, 5, 7 and 13.

http://www.ebanan.com

Z-AXIS, CRT, PROBE ADJUST and CONTROL MUX DIAGRAM 7

ASSEMBLY A8

CIRCUIT NUMBER	SCHEM LOCATION	BOARD LOCATION	CIRCUIT NUMBER	SCHEM LOCATION	BOARD LOCATION	CIRCUIT NUMBER	SCHEM LOCATION	BOARD LOCATION	CIRCUIT NUMBER	SCHEM LOCATION	BOARD LOCATION
R901	5A	1A	R903	6A	1F	W900	4A	1E			
R902	6A	1C	R905	4A	1H						

Partial A8 also shown on diagram 13.

ASSEMBLY A10

C910	2L	10B	DS2701	8L	9N	R924	2H	9C	R2727	5E	7L
C935	2H	7A	DS2702	7L	9M	R930	1H	8A	R2728	5E	6L
C1001	5C	7L	DS2703	5K	9M	R931	1H	7A	R2729	6E	7L
C1002	6C	7M	DS2704	6K	9M	R932	1H	7A	R2733	6F	9L
C1003	6C	8M				R933	1H	7B	R2734	6F	9L
C1004	7C	7L	J15	2K	6A	R934	2G	7B	R2735	5G	9L
C2703	7G	6M	J927	2L	10B	R935	2H	7B	R2736	5G	10L
C2704	6G	7M				R936	1J	7A	R2737	5G	10K
C2705	7G	7N	P8	8A	10M	R937	2J	7A	R2738	5G	10L
C2706	7H	6N	P9	3M	8N	R938	1G	7B	R2739	4H	10L
C2707	7H	7M	P9	4M	8N	R939	2G	7B	R2740	5J	10L
C2708	6H	7N	P2302	1A	10D	R940	2J	7A	R2741	5J	8M
C2710	7J	7N	P2304	3A	10D	R1001	5C	3K	R2742	6J	8L
C2711	7K	8M				R1002	6C	3K	R2743	6H	8L
C2712	7K	8N	Q905	4E	10A	R1003	6C	3L	R2745	7J	7N
C2713	8K	6N	Q907	4E	10A	R1004	7C	3K	R2750	6J	8M
C2715	6G	10L	Q908	4F	10A	R1005	5C	7L	R2751	6K	9M
C2716	5H	10L	Q1001	5D	3K	R1006	6D	7L	R2758	6L	9L
C2717	5H	10L	Q1002	6D	3K	R1007	7D	8L	R2760	6L	10M
C2719	5J	10M	Q1003	6D	3L	R1008	7D	7L	R2765	7F	7M
C2720	6J	8L	Q1004	7D	3K	R1009	8C	7K	R2784	3L	7N
C2721	6J	6K	Q1005	8D	7L	R1010	8B	7K	R2785	3L	8N
C2723	6E	7L	Q2701	7H	7N	R1020	5B	7L	R2786	4L	6N
C2724	8K	8M	Q2702	7H	7M	R1021	5B	7L	R2787	5L	6N
C2758	6K	10L	Q2703	7H	6M	R1022	6B	7L	R2788	5L	6N
C2759	7F	7M	Q2704	8H	6M	R1023	6B	7L	R2789	5L	8N
C2783	3L	8N	Q2705	7G	6M	R1024	7B	7L	R2795	7E	7L
C2784	5L	6N	Q2706	8F	7M	R1025	7B	7L	R2796	6F	6M
C2785	5L	8N	Q2707	7F	6M	R1028	5D	4K			
			Q2708	5E	6L	R2701	7E	6L	U506	2E	9C
CR935	2J	7A	Q2709	5F	6L	R2702	7E	6L	U930A	1H	7B
CR936	2J	7A	Q2711	5G	10L	R2703	6E	7L	U930B	2H	7B
CR1001	5D	4K	Q2712	5H	10L	R2704	6E	7L	U931	3H	9B
CR1002	7D	4K	Q2713	5H	10L	R2705	7F	7L	U1001B	6B	7L
CR1003	8C	7L	Q2715	7F	6M	R2706	7F	7M	U1001C	6B	7L
CR1004	7C	7L				R2708	6G	7M	U1001D	5B	7L
CR1005	5D	5M	R503	2B	10C	R2709	6G	7M	U1101A	7B	2M
CR2701	7K	9M	R505	5B	9C	R2710	8G	6M			
CR2702	8K	9M	R506	6B	9C	R2711	7G	6N	VR2701	7G	6M
CR2703	7K	8N	R507	6B	9C	R2712	7G	6M			
CR2704	7K	6N	R508	2B	10C	R2713	7G	7M	W9	3M	8N
CR2705	8G	6M	R510	2B	10C	R2714	7G	7M	W9	8A	10M
CR2707	7F	7L	R512	3B	10C	R2715	7G	7M	W9	8M	8N
CR2713	6H	10L	R906	4E	10B	R2716	6G	7M	W16	8A	7K
CR2714	5H	10L	R907	4E	10A	R2717	6H	7M	W906	1H	7A
CR2715	5J	9L	R908	4F	10A	R2718	7J	7M	W1000	5D	3L
CR2716	5K	8M	R909	5D	8B	R2719	7J	7N	W1010	7D	4K
CR2717	6K	9M	R910	2L	10B	R2720	7J	8N	W1288	8J	6J
CR2718	5J	8L	R911	2L	8A	R2721	7K	9N	W2302	3A	10D
			R920	3G	8B	R2722	7K	6L	W2304	4A	10D
DS901	4E	8A	R921	3G	8B	R2723	7K	9M	W2701	7E	5K
DS902	4F	9A	R922	3H	9C	R2724	7K	9M			
DS903	4F	10A	R923	3H	9C	R2726	5E	6L			

Partial A10 also shown on diagrams 1, 2, 3, 4, 5, 6 and 13.

CHASSIS MOUNTED PARTS

J16	7A	CHASSIS	P26	1L	CHASSIS	V1	1M	CHASSIS			
			P27	2L	CHASSIS						

http://www.ebanoo.com

MEASUREMENT PROCESSOR DIAGRAM 8

ASSEMBLY A16

CIRCUIT NUMBER	SCHEM LOCATION	BOARD LOCATION	CIRCUIT NUMBER	SCHEM LOCATION	BOARD LOCATION	CIRCUIT NUMBER	SCHEM LOCATION	BOARD LOCATION
BT02501	5K	8D	R2502	1D	4H	R2560	3M	4F
			R2503	7E	5J	R2561	3M	4F
C2514	6B	6H	R2504	6B	5J	R2562	3M	4F
C2515	6B	6H	R2505	8D	5F	R2563	4M	4F
C2516	5J	8J	R2506	5K	7C	R2564	5M	4J
C2517	8A	6J	R2508	2B	3D			
C2518	8A	8J	R2509	1B	5J	U2501	1C	6G
C2551	4M	4F	R2510	2B	8J	U2502	7A	6J
C2552	4M	4F	R2511	1B	8C	U2503A	2F	4H
C2553	3M	4F	R2512	1E	4H	U2503B	2D	4H
C2554	3M	4F	R2513	1D	4G	U2503C	8G	4H
C2555	5M	4J	R2514	3D	5F	U2503D	1F	4H
			R2515	8D	6G	U2506A	7D	5J
CR2501	4J	7J	R2516	7D	6G	U2506B	7D	5J
CR2502	4K	7J	R2517	8F	6J	U2506C	7B	5J
CR2504	8E	6J	R2518	8F	6J	U2506D	2E	5J
CR2505	7F	7J	R2519	6J	6J	U2512	3J	4F
			R2520	5H	4I	U2513	3G	4I
DS2501	8E	6I	R2521	5E	5I	U2514	2G	5H
			R2522	3H	6I	U2515	1E	4H
J2502	1B	3J	R2523	7A	6J	U2517	4L	5F
J2502	3M	3J	R2524	8B	6J	U2518	5L	4J
			R2526	7D	6F	U2519	6L	6I
Q2507	7F	7J	R2527	7D	6F	U2521	7J	5I
			R2554	2B	2A			
R2501	2D	4G	R2555	1B	4G	Y2501	6B	6H

Partial A16 also shown on diagrams 9, 10, 11 and 14.

http://www.eeman.com

READOUT SYSTEM DIAGRAM 9

ASSEMBLY A16

CIRCUIT NUMBER	SCHEM LOCATION	BOARD LOCATION	CIRCUIT NUMBER	SCHEM LOCATION	BOARD LOCATION	CIRCUIT NUMBER	SCHEM LOCATION	BOARD LOCATION
C2411	6J	5E	R2409	3K	6C	U2407A	4F	5E
C2412	4J	5C	R2410	5M	7C	U2407B	3F	5E
C2416	2H	1B	R2411	3M	7C	U2408	4G	5C
C2417	2J	1B	R2413	5J	5E	U2409A	1B	3B
C2418	2J	1B	R2414	6J	5E	U2409B	1D	3B
C2419	2J	1B	R2415	4J	5D	U2410	2E	2B
C2420	2K	1B	R2416	4J	5C	U2411	7F	4B
			R2417	4M	7C	U2412	4J	5D
J2302	3M	8B	R2418	4M	7C	U2413	3J	5C
J2502	1A	3J	R2419	2M	2C	U2414	4L	6D
J2502	1M	3J	R2420	2M	2A	U2415	3L	6C
			R2421	1A	2B	U2416A	5L	7D
R2400	2B	2A				U2416B	3L	7D
R2401	2M	2A	U2400	2C	3C	U2416C	3M	7D
R2402	2F	2B	U2401	4B	5F	U2416D	5M	7D
R2404	1G	1D	U2402	6B	5F	U2417A	1B	1A
R2405	4G	5D	U2403	1G	1C	U2417B	1C	1A
R2406	5K	6D	U2404	5E	4B	U2417C	2B	1A
R2407	5K	6E	U2405	6F	3B	U2417D	3B	1A
R2408	3K	6C	U2406	5G	4C			

Partial A16 also shown on diagrams 8, 10, 11 and 14.

http://www.eaman.com

SWITCH BOARD AND INTERFACE DIAGRAM 10

ASSEMBLY A14

CIRCUIT NUMBER	SCHEM LOCATION	BOARD LOCATION	CIRCUIT NUMBER	SCHEM LOCATION	BOARD LOCATION	CIRCUIT NUMBER	SCHEM LOCATION	BOARD LOCATION
CR02001	3G	3F	DS2034	3D	2F	S2015	3J	4F
CR2002	3G	2F	DS2035	4D	2F	S2016	3J	4F
CR2003	3H	4E	DS2036	5D	3F	S2017	8H	1A
CR2004	3J	3D	DS2037	6D	3F	S2018	8H	2A
CR2005	3J	3C	DS2038	6D	3F	S2019	8H	3A
CR2006	3K	3A	DS2039	7D	3F	S2020	7H	4A
			DS2041	3C	2F	S2021	7H	3B
DS2001	3F	2A	DS2042	3C	2F	S2022	6H	1B
DS2002	3F	2B	DS2043	4C	2F	S2024	6H	3C
DS2003	4F	2B	DS2044	5C	3F	S2026	5H	1C
DS2004	5F	2C	DS2045	6C	3F	S2028	4H	2D
DS2005	6F	3D	DS2046	6C	3F	S2030	3H	2E
DS2006	6F	3D	DS2047	7C	3F	S2031	3H	2F
DS2007	7F	3D	DS2048	8C	4F	S2033	8G	1B
DS2008	8F	3D				S2034	8G	2A
DS2009	3F	4A	P2501	2F	1B	S2035	8G	3A
DS2010	3F	4B	P2501	3C	1B	S2036	7G	4B
DS2011	4F	4B				S2037	7G	3B
DS2012	5F	3B	R2001	7L	4B	S2038	6G	1C
DS2013	6F	4C	R2002	4L	3E	S2039	6G	4C
DS2014	6F	4C				S2040	6G	3C
DS2015	7F	4C	S2001	8J	1A	S2041	5G	4C
DS2020	5E	2C	S2002	8J	2A	S2042	5G	1D
DS2021	6E	2C	S2003	8J	3A	S2043	5G	3D
DS2022	6E	2D	S2004	7J	4A	S2045	4G	4F
DS2023	7E	2E	S2005	7J	3A	S2046	3G	3F
DS2025	3D	2F	S2006	6J	1B	S2047	3G	3F
DS2026	3D	2F	S2007	6J	4B	S2048	3G	3F
DS2027	4D	2F	S2008	6J	3C			
DS2028	5D	3F	S2009	5J	4C	U2001	2M	2B
DS2029	5D	3F	S2010	5J	1C	U2002	5M	4B
DS2030	6D	3F	S2011	4J	4D			
DS2031	7D	3F	S2012	4J	1D	W2501	2N	1B
DS2032	8E	4E	S2013	4J	4E	W2501	8C	1B
DS2033	3D	2F	S2014	3J	4F			

Partial A14 also shown on diagram 14.

ASSEMBLY A16

C2521	2F	7I	Q2501	2G	7I	R2539	1D	7H
C2522	1G	7I	Q2502	2H	7I	R2540	1J	7H
C2523	1H	7H	Q2503	1H	7H	R2541	1E	7G
C2524	1J	7H	Q2504	1J	7H	R2542	1K	7G
C2525	1J	7H	Q2505	1K	7H	R2546	3B	7I
C2526	1K	7H	Q2506	1K	7H	R2547	4C	7I
C2543	3C	7I				R2548	4C	7I
C2544	4C	7I	R2528	2A	6H	R2549	5B	7J
C2545	4C	7I	R2529	4A	6H	R2550	6B	7J
C2546	5B	7I	R2531	1C	7I	R2551	7B	7J
C2547	6B	7J	R2532	2F	7I	R2552	7B	7J
C2548	7B	7J	R2533	1C	7H	R2553	8B	8J
C2549	7B	7J	R2534	1G	7H			
C2550	8B	8I	R2535	1D	7H	U2523	1A	7H
			R2536	1H	7H	U2524	3A	6I
J2501	2F	8I	R2537	1D	7H	U2525	3B	7I
J2501	3C	8I	R2538	1J	7H			

Partial A16 also shown on diagrams 8, 9, 11 and 14.

http://www.eliaman.com

ADC, DAC SYSTEM DIAGRAM 11

ASSEMBLY A12

CIRCUIT NUMBER	SCHEM LOCATION	BOARD LOCATION	CIRCUIT NUMBER	SCHEM LOCATION	BOARD LOCATION	CIRCUIT NUMBER	SCHEM LOCATION	BOARD LOCATION
J2105	4B	1B	R2105	7A	4C	R2111A	3A	2C
			R2106	3A	1D	R2111B	3B	2D
R2101	6A	3A	R2107	4A	3D	R2112	5A	1F
R2102	8A	2A	R2108	8A	4D	R2113A	4B	2D
R2103	7A	3B	R2109	6A	4F	R2113B	4A	2E
R2104	6A	2B	R2110	5A	1E			

Partial A12 also shown on diagram 14.

ASSEMBLY A16

C2300	3H	7B	R2314	7E	7E	R2349	5E	7F
C2301	3L	7C	R2315	7F	7E	R2350	5H	7F
C2302	4L	7B	R2316	7F	7E	R2351	5H	7F
C2303	3L	7B	R2317	7E	7E	R2352	6L	7D
C2305	2L	7B	R2318	7E	7E	R2353	7L	7E
C2306	2M	7B	R2319	1K	4A	R2354	7L	7E
C2307	3L	7A	R2320	1J	3A	R2355	8L	7D
C2308	3M	7A	R2321	1J	5A	R2356	8L	7D
C2309	4L	7A	R2322	1J	5A	R2357	8L	7D
C2310	4M	7B	R2323	6K	7E			
C2318	6K	7C	R2324	1C	5B	U2300	2D	5B
C2320	5M	7D	R2325	4E	8G	U2301	1E	5B
C2322	5M	7D	R2326	7K	7E	U2302	3J	6B
C2323	5L	7D	R2327	7K	7E	U2303	1K	7A
C2324	5M	7A	R2328	2F	6A	U2304A	4L	7B
			R2329	2F	6A	U2304B	2M	7B
J2302	2M	8B	R2330	2G	6A	U2304C	3L	7B
J2304	6M	8E	R2331	2G	6A	U2304D	3L	7B
J2601	1C	2A	R2332	2H	5A	U2305A	5M	7B
J2601	1M	2A	R2333	2G	5A	U2305B	4M	7B
			R2334	2F	5A	U2305C	3M	7B
P2105	4B	8G	R2335	2F	5A	U2305D	2L	7B
			R2336	2K	7B	U2306	5K	7C
R2301	3H	7A	R2337	4F	7G	U2307	5D	6E
R2302	3H	7A	R2338	4F	7G	U2308	5J	7G
R2303	2J	6C	R2339	4F	7G	U2309	6J	7G
R2304	3L	7A	R2340	4F	7G	U2310	6G	7F
R2305	4L	7B	R2341	4F	7G	U2311	5G	7F
R2306	6K	7C	R2342	4F	7G	U2312	7G	7E
R2307	5K	7C	R2343	5H	7G	U2313	3G	6E
R2308	5K	7C	R2344	4H	7G	U2314	2J	7B
R2310	2C	2A	R2345	5E	7F			
R2311	6F	7F	R2346	5E	7F	W2105	5B	8G
R2312	6F	7E	R2347	5E	7F			
R2313	7E	7E	R2348	5E	7F			

Partial A16 also shown on diagrams 8, 9, 10 and 14.

http://www.eaman.com

POWER SUPPLY DIAGRAM 12

ASSEMBLY A18

CIRCUIT NUMBER	SCHEM LOCATION	BOARD LOCATION	CIRCUIT NUMBER	SCHEM LOCATION	BOARD LOCATION	CIRCUIT NUMBER	SCHEM LOCATION	BOARD LOCATION
C2201	3H	5D	CR2234	2C	3B	R2231	7M	1J
C2202	2D	3D	CR2235	4L	4H	R2232	6J	1F
C2203	5H	2E	CR2236	6J	1G	R2233	6G	1E
C2204	3D	2D	CR2237	4G	3E	R2236	8G	2F
C2206	4G	4E				R2237	6E	1D
C2207	3E	3D	DS2201	8M	2K	R2238	6H	1E
C2208	3E	3D				R2239	5H	1E
C2209	4E	2E	F2201	2A	2A	R2240	6E	2D
C2210	6K	1G				R2241	5H	1E
C2211	4E	2D	J2208	7M	2K	R2242	7J	1G
C2212	4G	3E	J2225	6M	5H	R2243	7K	1G
C2213	2B	5B	J2726	6M	4K	R2245	4F	3E
C2214	1B	5A				R2246	6E	2D
C2215	2B	4B	L2201	2M	3G	R2247	5D	3E
C2216	2B	1B	L2202	3M	5G	R2248	3E	3D
C2217	2C	3B	L2203	5M	5H	R2250	1A	1C
C2218	8H	2F	L2204	4M	5H	R2252	6H	1E
C2219	6J	1E	L2205	4M	5G	R2253	4G	4E
C2221	2M	3F	L2206	6K	1J	R2254	7J	1G
C2222	2M	4G	L2207	1B	4B	R2255	6K	1G
C2223	3M	3F	L2208	2B	3B	R2256	2D	2C
C2224	3M	4G				R2257	6M	5G
C2225	5M	5F	P2204	1M	4F	R2259	8M	3K
C2226	5M	4H				R2260	1B	4A
C2227	5M	4G	Q2201	4H	4E	R2265	2D	2C
C2228	5M	4H	Q2202	3G	3D	R2266	8M	2K
C2229	4M	4F	Q2203	4G	3E	R2267	8M	2K
C2230	4M	4H	Q2204	3E	1D	R2268	6J	1F
C2232	3M	4J	Q2206	6F	1D	R2270	8G	2E
C2233	4M	4J	Q2208	6E	2D	R2271	4F	3E
C2234	5L	5G	Q2209	7J	1F	R2272	7K	1G
C2236	6M	5G	Q2210	7K	1E	R2273	6J	1G
C2238	6E	2D	Q2211	2E	1D	R2274	6G	2E
C2239	4E	2D	Q2212	6G	2E	R2275	5E	1D
C2243	2E	1C	Q2213	6H	2E	R2276	6J	1G
C2244	7M	1J	Q2214	8J	2F			
C2245	7L	2J				RT2201	1A	1B
C2248	6J	2G	R2201	5H	3E			
C2249	4G	4D	R2203	2D	2D	S2201	1C	4B
			R2204	2D	2D			
CR2201	4H	4E	R2205	6E	2D	T2203	2H	5C
CR2202	2G	2C	R2206	4D	3D	T2204	2K	2H
CR2204	6J	1F	R2207	5D	3E	T2205	6K	1H
CR2205	6J	1F	R2208	5E	3E	T2206	1C	5E
CR2206	2L	4G	R2209	5E	3D			
CR2207	2L	4G	R2210	4E	3D	U2201	5F	3E
CR2208	6L	3H	R2211	4E	3D	U2230	7L	3K
CR2209	5L	3H	R2212	4D	2E			
CR2210	5L	3H	R2215	4E	3D	VR2201	5F	1D
CR2211	5L	3H	R2216	4F	3E	VR2202	3E	1C
CR2212	4L	3H	R2218	3E	2D	VR2203	4H	4E
CR2213	4L	3H	R2219	3D	1C	VR2204	2A	1A
CR2214	4L	3J	R2220	3E	1C	VR2205	5G	1E
CR2215	4M	3H	R2221	2E	1C	VR2206	3D	2C
CR2216	4M	3J	R2222	2E	1C	VR2207	8J	2F
CR2218	3M	3J	R2223	3D	1C			
CR2219	3L	3H	R2224	6F	1D	W28	2A	2C
CR2220	3L	3G	R2225	6F	1D	W29	1A	2C
CR2227	7J	1G	R2226	2A	2B	W31	2E	3D
CR2228	7K	1G	R2227	1B	4A	W32	3E	4D
CR2231	2C	3B	R2228	2B	2B	W2201	7J	1F
CR2232	1C	2B	R2229	1C	4C			
CR2233	1C	3B	R2230	1C	4C			

CHASSIS MOUNTED PARTS

B25	6N	CHASSIS	P25	6N	CHASSIS			
FL2201	2A	CHASSIS	S2202	3E	CHASSIS			

http://www.abaman.com

MAIN BOARD POWER DISTRIBUTION DIAGRAM 13

ASSEMBLY A8

CIRCUIT NUMBER	SCHEM LOCATION	BOARD LOCATION	CIRCUIT NUMBER	SCHEM LOCATION	BOARD LOCATION	CIRCUIT NUMBER	SCHEM LOCATION	BOARD LOCATION	CIRCUIT NUMBER	SCHEM LOCATION	BOARD LOCATION
W900	5M	1E									

Partial A8 also shown on diagram 7.

ASSEMBLY A10

C135	7D	2B	C613	2E	4K	R390	1K	8F	U602	1F	3K
C136	8E	2B	C701	3H	10K	R392	8F	7C	U603	1G	3M
C140	8D	1C	C702	3J	9J	R481	1C	2G	U604	2F	5M
C155	7E	1B	C703	3J	10K	R504	1M	9C	U606	2F	5M
C156	8E	1B	C704	3J	9K	R701	3H	9J	U701	3J	9J
C171	5A	2B	C705	4A	9G	R709	3J	9H	U702	3J	9K
C172	1A	3C	C708	3H	9J	R723	5H	9J	U801	5G	7H
C180	8D	6D	C801	4A	8K	R733	3J	10K	U802	6J	8H
C181	7A	6D	C806	5G	8H	R734	4B	9G	U901A	5K	9A
C205	3H	10H	C815	6J	7H	R837	7J	8K	U901B	5L	9A
C206	3H	10H	C816	7J	8H	R915	5L	9A	U901	5J	9A
C214	7B	4D	C818	4B	7K	R916	5L	9A	U930	5J	7B
C215	7B	5D	C901	5K	9A	R1026	8F	7M	U931	3L	9B
C216	2B	5G	C902	5K	7A	R1027	6F	8L	U932	5K	7A
C217	1B	4H	C903	5M	8A	R1101	6G	1J	U1001	7F	7L
C219	7B	5D	C904	5M	9B	R1102	8G	1J	U1101	7H	2M
C224	7B	3D	C1005	7F	7M	R1158	1L	2J	U1102	7H	1L
C225	7B	3D	C1006	7F	8L	R1159	3M	2J	U1103	1L	2K
C229	7B	3D	C1101	6G	1M	R2783	4D	7N	U1104	2L	2M
C234	7C	2D	C1102	8G	2M				U1106	2M	2J
C235	7C	2D	C1158	1L	2K	U112	7D	6C			
C239	7C	2D	C1159	3M	2J	U122	7D	4C	W103	6A	6D
C244	7D	1D	C2701	5H	7E	U171	5A	3B	W235	7E	5D
C245	7C	1D	C2702	8G	6L	U172	6A	3B	W900	5M	9B
C249	7D	1D	C2709	4E	7M	U173	1A	3C	W1103	2L	1K
C265	5B	5F				U201	1B	5H	W1200	1H	6F
C282	3B	4F	J1204	1A	5J	U202	1B	5G	W1201	3L	8C
C283	6B	6F				U203	3H	10G	W1202	2H	9H
C297	3C	5F	L101	5A	2C	U210	7B	5D	W1204	1H	7G
C298	3B	3F	L102	8D	2C	U220	7B	4D	W1205	2E	4N
C304	5D	7D	L201	6A	6E	U230	7C	3E	W1209	1E	2J
C309	2H	6H	L216	2B	4H	U240	7C	2E	W1210	1E	4K
C316	5C	8E	L217	1B	5H	U260	5B	5F	W1216	3L	8C
C317	1K	8E	L445	1C	3H	U301	1K	8D	W1217	3G	6H
C318	8J	9E	L446	2C	4H	U302	5E	8C	W1218	3G	5H
C320	1H	8F	L475	1C	1J	U303	5E	9C	W1221	3B	4H
C337	5D	9E	L476	2D	2H	U304	5F	8D	W1222	8B	6D
C338	8A	8G				U307	5E	7D	W1223	3K	6D
C339	8B	9G	P2302	8M	10D	U308	5E	7D	W1231	6F	8K
C351	5F	7C	P2502	1N	1L	U309	5F	7C	W1237	8F	6K
C445	1C	3G				U310	5E	9D	W1247	5C	6D
C475	1C	1G	R182	8D	6D	U311	5E	9D	W1248	5G	6H
C481	2C	3G	R208	3H	10H	U315	1H	8F	W1249	5G	5H
C482	2D	2G	R226	7B	6E	U316	2H	7H	W1250	5H	7K
C501	1E	2N	R245	7C	3D	U421	2C	3G	W1251	8A	6H
C502	1E	2N	R282	3B	3F	U431	2C	2G	W1252	8A	5H
C503	3E	5N	R283	6B	6F	U441	1D	2H	W1255	5B	6F
C505	2M	9C	R297	3C	6F	U501	1E	3N	W1277	4D	8K
C604	2F	5M	R298	3B	3F	U502	2E	3N	W2302	8M	10D
C605	1F	4L	R312	5D	7C	U503	3E	5N	W2502	1M	1L
C606	1F	2J	R339	8J	8E	U506	2M	9C			
C609	1G	3M	R345	5C	8E	U600	1E	4L			
C610	2F	5N	R374	5D	10E	U601	2E	5K			

Partial A10 also shown on diagrams 1, 2, 3, 4, 5, 6 and 7.

http://www.ebanat.com

PROCESSOR BOARD POWER DISTRIBUTION DIAGRAM 14

ASSEMBLY A12

CIRCUIT NUMBER	SCHEM LOCATION	BOARD LOCATION	CIRCUIT NUMBER	SCHEM LOCATION	BOARD LOCATION	CIRCUIT NUMBER	SCHEM LOCATION	BOARD LOCATION
J2105	3L	1B						

Partial A12 also shown on diagram 11.

ASSEMBLY A14

C2001	1M	2B	U2001	1L	2B	W2501	1L	1B
			U2002	1L	4B			
P2501	1L	1B						

Partial A14 also shown on diagram 10.

ASSEMBLY A16

C2304	3B	8A	C2530	2C	6H	U2402	2E	5F
C2311	1C	5B	C2531	2C	6H	U2403	2E	1C
C2312	1C	5B	C2532	2C	7H	U2404	1F	4B
C2313	1C	6B	C2541	1B	6J	U2405	1F	3B
C2314	6B	8A				U2406	1D	4C
C2315	7B	7B	J2302	3B	8B	U2407	1F	5E
C2316	1J	7B	J2501	1L	8I	U2408	1D	5C
C2317	6G	7C	J2502	1B	3J	U2409	1F	3B
C2319	1C	6F	J2601	5L	2A	U2410	2E	2B
C2321	1C	6F				U2411	2E	4B
C2401	1C	3B	P2105	3L	8G	U2412	6G	5D
C2402	1C	4B				U2413	7G	5C
C2403	1C	1C	R2309	6G	7C	U2414	6H	6D
C2404	1C	5E	R2412	6H	7D	U2415	7H	6C
C2405	1C	2A				U2416	7C	7D
C2406	1C	4A	U2300	1E	5B	U2417	1F	1A
C2407	2C	4D	U2301	1E	5B	U2501	1C	6G
C2408	2C	5D	U2302	1H	6B	U2502	1G	6J
C2409	2C	3D	U2303	6G	7A	U2503	1F	4H
C2410	2C	2B	U2304	6C	7B	U2506	2F	5J
C2415	6H	7D	U2305	7C	7B	U2512	2E	4F
C2501	2C	4J	U2306	6E	7C	U2513	2E	4I
C2502	2C	4F	U2307	1E	6E	U2514	2E	5H
C2503	2C	4F	U2308	6F	7G	U2515	2E	4H
C2504	2C	5G	U2309	7F	7G	U2517	1F	5F
C2505	2C	5J	U2310	7F	7F	U2518	1F	4J
C2506	2C	5H	U2311	7F	7F	U2519	1D	6I
C2507	2C	4G	U2312	7F	7E	U2523	2E	7H
C2508	2C	4G	U2313	1E	6E	U2524	2E	6I
C2509	2C	6F	U2314	6C	7B	U2525	2E	7I
C2510	2C	6I	U2400	1G	3C			
C2511	2C	4H	U2401	2E	5F	W2105	3L	8G

Partial A16 also shown on diagrams 8, 9, 10 and 11.

http://www.obaman.com

A10—MAIN BOARD

CIRCUIT NUMBER	SCHEM NUMBER	CIRCUIT NUMBER	SCHEM NUMBER	CIRCUIT NUMBER	SCHEM NUMBER	CIRCUIT NUMBER	SCHEM NUMBER	CIRCUIT NUMBER	SCHEM NUMBER	CIRCUIT NUMBER	SCHEM NUMBER
AT117	1	C235	13	C493	2	C2708	7	K108	1	Q600	4
AT127	1	C238	2	C494	2	C2709	13	K109	1	Q601	4
		C239	13	C501	13	C2710	7	K110	1	Q602	4
C1	1	C242	2	C502	13	C2711	7	K111	1	Q603	4
C2	1	C243	2	C503	13	C2712	7	K112	1	Q604	4
C10	1	C244	13	C505	13	C2713	7			Q605	4
C11	1	C245	13	C600	4	C2715	7	L101	13	Q606	4
C20	1	C248	2	C601	4	C2716	7	L102	13	Q607	4
C21	1	C249	13	C602	4	C2717	7	L130	1	Q608	4
C101	1	C258	2	C603	4	C2719	7	L140	1	Q701	2
C102	1	C265	13	C604	13	C2720	7	L201	13	Q702	2
C103	1	C268	2	C605	13	C2721	7	L216	13	Q703	2
C104	1	C271	2	C606	13	C2723	7	L217	13	Q704	2
C105	1	C272	2	C607	4	C2724	7	L426	3	Q801	6
C106	1	C273	2	C608	4	C2758	7	L432	3	Q802	6
C107	1	C274	2	C609	13	C2759	7	L445	13	Q803	6
C108	1	C275	2	C610	13	C2783	7	L446	13	Q804	6
C111	1	C282	13	C611	3	C2784	7	L462	3	Q805	6
C112	1	C283	13	C612	4	C2785	7	L475	13	Q806	6
C113	1	C297	13	C613	13			L476	13	Q807	6
C114	1	C298	13	C701	13	CR131	1	L701	2	Q808	6
C121	1	C301	5	C702	13	CR151	1	L702	2	Q809	6
C122	1	C302	5	C703	13	CR171	1	L703	2	Q810	6
C123	1	C303	5	C704	13	CR201	2	L704	2	Q905	7
C124	1	C304	13	C705	13	CR202	2			Q907	7
C125	1	C305	5	C706	2	CR260	2	P8	7	Q908	7
C126	1	C306	5	C707	2	CR261	2	P9	7	Q1001	7
C131	1	C307	5	C708	13	CR301	5	P17	6	Q1002	7
C132	1	C308	5	C711	2	CR432	3	P18	6	Q1003	7
C133	1	C309	13	C712	2	CR462	3	P19	2	Q1004	7
C134	1	C310	5	C801	13	CR603	4	P20	2	Q1005	7
C135	13	C311	5	C802	6	CR801	6	P2302	7	Q1101	3
C136	13	C312	5	C803	6	CR802	6	P2302	13	Q1102	3
C137	1	C313	5	C804	6	CR819	6	P2304	7	Q1103	3
C138	1	C314	5	C805	6	CR935	7	P2502	4	Q1104	3
C139	2	C315	5	C806	13	CR936	7	P2502	13	Q1105	3
C140	13	C316	13	C807	6	CR1001	7			Q1106	3
C151	1	C317	13	C808	6	CR1002	7	Q131	1	Q2701	7
C152	1	C318	13	C809	6	CR1003	7	Q151	1	Q2702	7
C153	1	C319	6	C810	6	CR1004	7	Q171	1	Q2703	7
C154	1	C320	13	C811	2	CR1005	7	Q250	2	Q2704	7
C155	13	C321	5	C814	6	CR2701	7	Q251	2	Q2705	7
C156	13	C326	5	C815	13	CR2702	7	Q252	2	Q2706	7
C157	1	C329	5	C816	13	CR2703	7	Q253	2	Q2707	7
C158	1	C330	5	C817	6	CR2704	7	Q284	2	Q2708	7
C159	2	C337	13	C818	13	CR2705	7	Q285	2	Q2709	7
C171	13	C338	13	C819	6	CR2707	7	Q301	5	Q2711	7
C172	13	C339	13	C901	13	CR2713	7	Q302	5	Q2712	7
C173	1	C351	13	C902	13	CR2714	7	Q303	5	Q2713	7
C180	13	C421	3	C903	13	CR2715	7	Q304	5	Q2715	7
C181	13	C422	3	C904	13	CR2716	7	Q305	5		
C190	1	C423	3	C910	7	CR2717	7	Q306	5	R12	1
C191	1	C424	3	C935	7	CR2718	7	Q307	5	R13	1
C201	2	C425	3	C1001	7			Q308	5	R22	1
C202	2	C426	3	C1002	7	DL21	2	Q309	5	R23	1
C203	2	C432	3	C1003	7	DL22	4	Q310	5	R101	1
C204	2	C444	3	C1004	7			Q311	5	R102	1
C205	13	C445	13	C1005	13	DS901	7	Q312	5	R103	1
C206	13	C447	3	C1006	13	DS902	7	Q313	5	R104	1
C210	2	C451	3	C1101	13	DS903	7	Q315	5	R105	1
C211	2	C452	3	C1102	13	DS2701	7	Q316	5	R106	1
C212	2	C453	3	C1103	3	DS2702	7	Q317	5	R107	1
C213	2	C454	3	C1105	3	DS2703	7	Q318	5	R108	1
C214	13	C455	3	C1106	3	DS2704	7	Q320	5	R111	1
C215	13	C462	3	C1107	3			Q321	5	R113	1
C216	13	C463	3	C1110	3	J11	1	Q322	5	R114	1
C217	13	C474	3	C1111	3	J12	1	Q323	5	R115	2
C218	2	C475	13	C1114	3	J13	1	Q325	5	R121	1
C219	13	C477	3	C1130	3	J14	1	Q326	5	R123	1
C220	2	C481	13	C1154	3	J15	7	Q328	5	R124	1
C221	2	C482	13	C1155	3	J927	7	Q329	5	R125	2
C222	2	C483	3	C1158	13	J1204	13	Q330	5	R131	1
C223	2	C484	3	C1159	13			Q331	5	R132	1
C224	13	C485	3	C2701	13	K100	1	Q332	5	R133	1
C225	13	C486	3	C2702	13	K101	1	Q333	5	R134	1
C228	2	C487	3	C2703	7	K102	1	Q440	3	R135	1
C229	13	C488	3	C2704	7	K103	1	Q444	3	R136	1
C232	2	C489	3	C2705	7	K104	1	Q470	3	R137	1
C233	2	C491	2	C2706	7	K105	1	Q474	3	R138	2
C234	13	C492	2	C2707	7	K107	1	Q480	3	R139	1

http://www.ebay.com

MORE

A10—MAIN BOARD (cont)

CIRCUIT NUMBER	SCHEM NUMBER	CIRCUIT NUMBER	SCHEM NUMBER	CIRCUIT NUMBER	SCHEM NUMBER	CIRCUIT NUMBER	SCHEM NUMBER	CIRCUIT NUMBER	SCHEM NUMBER	CIRCUIT NUMBER	SCHEM NUMBER
R140	2	R270	2	R353	6	R463	3	R652	4	R845	6
R141	1	R271	2	R354	5	R470	3	R653	4	R846	6
R142	1	R272	2	R355	5	R471	3	R654	4	R847	6
R151	1	R273	2	R356	5	R472	3	R655	4	R848	6
R152	1	R274	2	R357	5	R473	3	R656	4	R849	6
R153	1	R275	2	R358	6	R474	3	R657	4	R850	6
R154	1	R276	2	R359	5	R475	3	R658	4	R851	6
R155	1	R277	2	R360	5	R476	3	R659	4	R852	6
R156	1	R278	2	R361	5	R477	3	R662	4	R853	6
R157	1	R279	2	R362	5	R478	3	R663	4	R854	6
R158	2	R280	2	R363	5	R481	13	R664	4	R855	6
R159	1	R281	2	R364	5	R483	3	R665	4	R856	6
R160	2	R282	13	R365	5	R484	3	R666	4	R857	6
R161	1	R283	13	R366	5	R485	3	R669	4	R858	6
R162	1	R284	2	R367	5	R486	3	R670	4	R906	7
R171	1	R285	2	R369	6	R487	3	R671	4	R907	7
R175	1	R286	2	R370	5	R490	3	R672	4	R908	7
R176	1	R287	2	R371	5	R491	3	R701	13	R909	7
R177	1	R288	2	R372	5	R492	3	R702	2	R910	7
R178	1	R289	2	R373	5	R493	3	R703	2	R911	7
R179	1	R290	2	R374	13	R494	3	R706	2	R915	13
R180	1	R291	2	R375	5	R495	3	R707	2	R916	13
R181	1	R292	2	R376	5	R496	3	R708	2	R920	7
R182	13	R293	2	R377	5	R497	3	R709	13	R921	7
R201	2	R294	2	R378	5	R498	3	R710	2	R922	7
R202	2	R295	2	R379	5	R501	4	R711	2	R923	7
R203	2	R296	2	R380	5	R502	4	R712	2	R924	7
R204	2	R297	13	R381	5	R503	7	R715	2	R930	7
R205	2	R298	13	R382	5	R504	13	R716	2	R931	7
R206	2	R301	5	R383	5	R505	7	R717	2	R932	7
R207	2	R302	5	R384	5	R506	7	R718	2	R933	7
R208	13	R303	5	R385	5	R507	7	R719	2	R934	7
R209	2	R304	5	R386	5	R508	7	R720	2	R935	7
R210	2	R305	5	R387	5	R510	7	R721	2	R936	7
R211	2	R306	5	R388	5	R512	7	R722	2	R937	7
R212	2	R307	5	R390	13	R601	4	R723	13	R938	7
R213	2	R308	5	R391	5	R602	4	R724	2	R939	7
R214	2	R309	5	R392	13	R603	4	R725	2	R940	7
R215	2	R310	5	R393	5	R604	4	R726	2	R1001	7
R218	2	R311	5	R394	5	R605	4	R727	2	R1002	7
R219	2	R312	13	R395	5	R606	4	R728	2	R1003	7
R220	2	R313	5	R396	5	R607	3	R729	2	R1004	7
R221	2	R314	5	R410	3	R609	4	R730	2	R1005	7
R222	2	R315	5	R411	3	R610	4	R731	2	R1006	7
R223	2	R316	5	R412	3	R611	4	R732	2	R1007	7
R224	2	R317	5	R413	3	R612	4	R733	13	R1008	7
R225	2	R318	5	R414	3	R613	4	R734	13	R1009	7
R226	13	R319	5	R415	3	R614	4	R801	6	R1010	7
R227	2	R320	5	R416	3	R615	4	R802	6	R1020	7
R228	2	R321	5	R417	3	R616	4	R803	6	R1021	7
R229	2	R322	5	R420	3	R617	4	R804	6	R1022	7
R230	2	R323	5	R421	3	R618	4	R805	6	R1023	7
R231	2	R325	5	R422	3	R619	4	R806	6	R1024	7
R232	2	R326	5	R423	3	R620	4	R807	6	R1025	7
R233	2	R327	5	R424	3	R621	4	R808	6	R1026	13
R234	2	R328	5	R425	3	R622	4	R809	6	R1027	13
R235	2	R329	5	R426	3	R623	4	R810	6	R1028	7
R238	2	R330	5	R430	3	R624	4	R811	6	R1101	13
R240	2	R331	5	R431	3	R625	4	R812	6	R1102	13
R241	2	R332	5	R432	3	R626	4	R813	6	R1103	3
R242	2	R333	5	R440	3	R627	4	R814	6	R1104	3
R243	2	R334	5	R441	3	R628	4	R815	6	R1110	3
R244	2	R335	5	R442	3	R630	4	R816	6	R1111	3
R245	13	R336	5	R443	3	R631	4	R819	6	R1112	3
R248	2	R337	5	R444	3	R636	4	R820	6	R1113	3
R250	2	R338	5	R445	3	R637	4	R821	6	R1114	3
R251	2	R339	13	R446	3	R638	4	R822	6	R1115	3
R254	2	R340	5	R447	3	R639	4	R823	6	R1116	3
R255	2	R341	5	R448	3	R640	4	R825	6	R1117	3
R256	2	R342	5	R449	3	R641	4	R826	6	R1118	3
R260	2	R343	5	R450	3	R642	4	R827	6	R1120	3
R261	2	R344	5	R451	3	R643	4	R828	6	R1121	3
R262	2	R345	13	R452	3	R644	4	R829	6	R1122	3
R263	2	R346	5	R453	3	R645	4	R836	6	R1123	3
R264	2	R347	5	R454	3	R646	4	R837	13	R1124	3
R265	2	R348	5	R455	3	R647	4	R840	6	R1125	3
R266	2	R349	5	R456	3	R648	4	R841	6	R1126	3
R267	2	R350	5	R460	3	R649	4	R842	6	R1127	3
R268	2	R351	5	R461	3	R650	4	R843	6	R1128	3
R269	2	R352	5	R462	3	R651	4	R844	6	R1131	3

http://www.ebam.com

MORE

A10—MAIN BOARD (cont)

CIRCUIT NUMBER	SCHEM NUMBER	CIRCUIT NUMBER	SCHEM NUMBER	CIRCUIT NUMBER	SCHEM NUMBER	CIRCUIT NUMBER	SCHEM NUMBER	CIRCUIT NUMBER	SCHEM NUMBER	CIRCUIT NUMBER	SCHEM NUMBER
R1132	3	R2739	7	U301	5	U701	2	W19	2	W811	6
R1133	3	R2740	7	U301	6	U701	13	W20	2	W815	2
R1134	3	R2741	7	U301	13	U702	2	W100	1	W900	13
R1135	3	R2742	7	U302	5	U702	13	W101	1	W906	7
R1136	3	R2743	7	U302	13	U801	2	W102	1	W1000	7
R1142	3	R2745	7	U303	5	U801	6	W103	13	W1010	7
R1143	3	R2750	7	U303	13	U801	13	W200	2	W1101	3
R1144	3	R2751	7	U304	5	U802	6	W201	2	W1102	3
R1145	3	R2758	7	U304	13	U802	13	W202	2	W1103	13
R1150	3	R2760	7	U307	5	U901	13	W203	2	W1104	3
R1154	3	R2765	7	U307	13	U930	7	W205	2	W1105	3
R1155	3	R2783	13	U308	5	U930	13	W206	2	W1106	3
R1158	13	R2784	7	U308	13	U931	7	W207	2	W1107	3
R1159	13	R2785	7	U309	5	U931	13	W208	2	W1120	3
R1162	3	R2786	7	U309	13	U932	13	W209	2	W1200	13
R1163	3	R2787	7	U310	5	U1001	7	W210	2	W1201	13
R1170	3	R2788	7	U310	13	U1001	13	W223	2	W1202	13
R2701	7	R2789	7	U311	5	U1101	3	W231	2	W1204	13
R2702	7	R2795	7	U311	13	U1101	7	W232	2	W1205	13
R2703	7	R2796	7	U313	5	U1101	13	W235	13	W1209	13
R2704	7			U315	5	U1102	3	W304	5	W1210	13
R2705	7	U112	1	U315	13	U1102	13	W305	6	W1216	13
R2706	7	U112	13	U316	5	U1103	3	W401	3	W1217	13
R2708	7	U122	1	U316	13	U1103	13	W403	3	W1218	13
R2709	7	U122	13	U421	3	U1104	3	W404	3	W1221	13
R2710	7	U171	1	U421	13	U1104	13	W405	3	W1222	13
R2711	7	U171	13	U431	3	U1106	3	W406	3	W1223	13
R2712	7	U172	1	U431	13	U1106	13	W407	3	W1231	13
R2713	7	U172	13	U441	3			W408	3	W1237	13
R2714	7	U173	1	U441	13	VR301	5	W410	3	W1247	13
R2715	7	U173	13	U501	4	VR302	5	W411	3	W1248	13
R2716	7	U174	1	U501	13	VR303	5	W412	3	W1249	13
R2717	7	U175	1	U502	4	VR304	5	W413	3	W1250	13
R2718	7	U201	2	U502	13	VR308	5	W414	3	W1251	13
R2719	7	U201	13	U503	4	VR309	5	W415	2	W1252	13
R2720	7	U202	2	U503	13	VR310	5	W416	2	W1255	13
R2721	7	U202	13	U506	7	VR311	5	W505	4	W1277	13
R2722	7	U203	2	U506	13	VR312	5	W510	4	W1288	7
R2723	7	U203	13	U600	4	VR801	6	W603	4	W2302	7
R2724	7	U210	2	U600	13	VR802	6	W604	4	W2302	13
R2726	7	U210	13	U601	4	VR2701	7	W605	4	W2304	7
R2727	7	U220	2	U601	13			W610	4	W2502	4
R2728	7	U220	13	U602	4	W9	7	W611	4	W2502	13
R2729	7	U230	2	U602	13	W11	1	W612	4	W2701	7
R2733	7	U230	13	U603	4	W12	1	W802	5		
R2734	7	U240	2	U603	13	W13	1	W805	6	Y600	4
R2735	7	U240	13	U604	4	W14	1	W806	6		
R2736	7	U260	2	U604	13	W16	7	W807	6		
R2737	7	U260	13	U606	4	W17	6	W808	6		
R2738	7	U280	2	U606	13	W18	6	W810	6		

http://www.ebanat.com

A14—SWITCH BOARD

CIRCUIT NUMBER	SCHEM NUMBER	CIRCUIT NUMBER	SCHEM NUMBER	CIRCUIT NUMBER	SCHEM NUMBER
C2001	14	DS2033	10	S2015	10
		DS2034	10	S2016	10
CR2001	10	DS2035	10	S2017	10
CR2002	10	DS2036	10	S2018	10
CR2003	10	DS2037	10	S2019	10
CR2004	10	DS2038	10	S2020	10
CR2005	10	DS2039	10	S2021	10
CR2006	10	DS2041	10	S2022	10
		DS2042	10	S2024	10
DS2001	10	DS2043	10	S2026	10
DS2002	10	DS2044	10	S2028	10
DS2003	10	DS2045	10	S2030	10
DS2004	10	DS2046	10	S2031	10
DS2005	10	DS2047	10	S2033	10
DS2006	10	DS2048	10	S2034	10
DS2007	10			S2035	10
DS2008	10	P2501	10	S2036	10
DS2009	10	P2501	14	S2037	10
DS2010	10			S2038	10
DS2011	10	R2001	10	S2039	10
DS2012	10	R2002	10	S2040	10
DS2013	10			S2041	10
DS2014	10	S2001	10	S2042	10
DS2015	10	S2002	10	S2043	10
DS2020	10	S2003	10	S2045	10
DS2021	10	S2004	10	S2046	10
DS2022	10	S2005	10	S2047	10
DS2023	10	S2006	10	S2048	10
DS2025	10	S2007	10		
DS2026	10	S2008	10	U2001	10
DS2027	10	S2009	10	U2001	14
DS2028	10	S2010	10	U2002	10
DS2029	10	S2011	10	U2002	14
DS2030	10	S2012	10		
DS2031	10	S2013	10	W2501	10
DS2032	10	S2014	10	W2501	14

http://www.ebamanuals.com

A16—PROCESSOR BOARD

CIRCUIT NUMBER	SCHEM NUMBER	CIRCUIT NUMBER	SCHEM NUMBER	CIRCUIT NUMBER	SCHEM NUMBER	CIRCUIT NUMBER	SCHEM NUMBER	CIRCUIT NUMBER	SCHEM NUMBER	CIRCUIT NUMBER	SCHEM NUMBER
BT2501	8	C2516	8	R2302	11	R2402	9	R2546	10	U2406	9
		C2517	8	R2303	11	R2404	9	R2547	10	U2406	14
C2300	11	C2518	8	R2304	11	R2405	9	R2548	10	U2407	9
C2301	11	C2521	10	R2305	11	R2406	9	R2549	10	U2407	14
C2302	11	C2522	10	R2306	11	R2407	9	R2550	10	U2408	9
C2303	11	C2523	10	R2307	11	R2408	9	R2551	10	U2408	14
C2304	14	C2524	10	R2308	11	R2409	9	R2552	10	U2409	9
C2305	11	C2525	10	R2309	14	R2410	9	R2553	10	U2409	14
C2306	11	C2526	10	R2310	11	R2411	9	R2554	8	U2410	9
C2307	11	C2530	14	R2311	11	R2412	14	R2555	8	U2410	14
C2308	11	C2531	14	R2312	11	R2413	9	R2560	8	U2411	9
C2309	11	C2532	14	R2313	11	R2414	9	R2561	8	U2411	14
C2310	11	C2541	14	R2314	11	R2415	9	R2562	8	U2412	9
C2311	14	C2543	10	R2315	11	R2416	9	R2563	8	U2412	14
C2312	14	C2544	10	R2316	11	R2417	9	R2564	8	U2413	9
C2313	14	C2545	10	R2317	11	R2418	9			U2413	14
C2314	14	C2546	10	R2318	11	R2419	9	U2300	11	U2414	9
C2315	14	C2547	10	R2319	11	R2420	9	U2300	14	U2414	14
C2316	14	C2548	10	R2320	11	R2421	9	U2301	11	U2415	9
C2317	14	C2549	10	R2321	11	R2501	8	U2301	14	U2415	14
C2318	11	C2550	10	R2322	11	R2502	8	U2302	11	U2416	9
C2319	14	C2551	8	R2323	11	R2503	8	U2302	14	U2416	14
C2320	11	C2552	8	R2324	11	R2504	8	U2303	11	U2417	9
C2321	14	C2553	8	R2325	11	R2505	8	U2303	14	U2417	14
C2322	11	C2554	8	R2326	11	R2506	8	U2304	11	U2501	8
C2323	11	C2555	8	R2327	11	R2508	8	U2304	14	U2501	14
C2324	11			R2328	11	R2509	8	U2305	11	U2502	8
C2401	14	CR2501	8	R2329	11	R2510	8	U2305	14	U2502	14
C2402	14	CR2502	8	R2330	11	R2511	8	U2306	11	U2503	8
C2403	14	CR2504	8	R2331	11	R2512	8	U2306	14	U2503	14
C2404	14	CR2505	8	R2332	11	R2513	8	U2307	11	U2506	8
C2405	14			R2333	11	R2514	8	U2307	14	U2506	14
C2406	14	DS2501	8	R2334	11	R2515	8	U2308	11	U2512	8
C2407	14			R2335	11	R2516	8	U2308	14	U2512	14
C2408	14	J2302	9	R2336	11	R2517	8	U2309	11	U2513	8
C2409	14	J2302	11	R2337	11	R2518	8	U2309	14	U2513	14
C2410	14	J2302	14	R2338	11	R2519	8	U2310	11	U2514	8
C2411	9	J2304	11	R2339	11	R2520	8	U2310	14	U2514	14
C2412	9	J2501	10	R2340	11	R2521	8	U2311	11	U2515	8
C2415	14	J2501	14	R2341	11	R2522	8	U2311	14	U2515	14
C2416	9	J2502	8	R2342	11	R2523	8	U2312	11	U2517	8
C2417	9	J2502	9	R2343	11	R2524	8	U2312	14	U2517	14
C2418	9	J2502	14	R2344	11	R2526	8	U2313	11	U2518	8
C2419	9	J2601	11	R2345	11	R2527	8	U2313	14	U2518	14
C2420	9	J2601	14	R2346	11	R2528	10	U2314	11	U2519	8
C2501	14			R2347	11	R2529	10	U2314	14	U2519	14
C2502	14	P2105	11	R2348	11	R2531	10	U2400	9	U2521	8
C2503	14	P2105	14	R2349	11	R2532	10	U2400	14	U2523	10
C2504	14			R2350	11	R2533	10	U2401	9	U2523	14
C2505	14	Q2501	10	R2351	11	R2534	10	U2401	14	U2524	10
C2506	14	Q2502	10	R2352	11	R2535	10	U2402	9	U2524	14
C2507	14	Q2503	10	R2353	11	R2536	10	U2402	14	U2525	10
C2508	14	Q2504	10	R2354	11	R2537	10	U2403	9	U2525	14
C2509	14	Q2505	10	R2355	11	R2538	10	U2403	14		
C2510	14	Q2506	10	R2356	11	R2539	10	U2404	9	W2105	11
C2511	14	Q2507	8	R2357	11	R2540	10	U2404	14	W2105	14
C2514	8			R2400	9	R2541	10	U2405	9		
C2515	8	R2301	11	R2401	9	R2542	10	U2405	14	Y2501	8

http://www.ebanual.com

A18—POWER SUPPLY BOARD

CIRCUIT NUMBER	SCHEM NUMBER	CIRCUIT NUMBER	SCHEM NUMBER	CIRCUIT NUMBER	SCHEM NUMBER	CIRCUIT NUMBER	SCHEM NUMBER	CIRCUIT NUMBER	SCHEM NUMBER	CIRCUIT NUMBER	SCHEM NUMBER
C2201	12	C2238	12	CR2235	12	Q2212	12	R2233	12	R2276	12
C2202	12	C2239	12	CR2236	12	Q2213	12	R2236	12		
C2203	12	C2243	12	CR2237	12	Q2214	12	R2237	12	RT2201	12
C2204	12	C2244	12					R2238	12		
C2206	12	C2245	12	DS2201	12	R2201	12	R2239	12	S2201	12
C2207	12	C2248	12			R2203	12	R2240	12		
C2208	12	C2249	12	F2201	12	R2204	12	R2241	12	T2203	12
C2209	12					R2205	12	R2242	12	T2204	12
C2210	12	CR2201	12	J2208	12	R2206	12	R2243	12	T2205	12
C2211	12	CR2202	12	J2225	12	R2207	12	R2245	12	T2206	12
C2212	12	CR2204	12	J2726	12	R2208	12	R2246	12		
C2213	12	CR2205	12			R2209	12	R2247	12	U2201	12
C2214	12	CR2206	12	L2201	12	R2210	12	R2248	12	U2230	12
C2215	12	CR2207	12	L2202	12	R2211	12	R2250	12		
C2216	12	CR2208	12	L2203	12	R2212	12	R2252	12	VR2201	12
C2217	12	CR2209	12	L2204	12	R2215	12	R2253	12	VR2202	12
C2218	12	CR2210	12	L2205	12	R2216	12	R2254	12	VR2203	12
C2219	12	CR2211	12	L2206	12	R2218	12	R2255	12	VR2204	12
C2221	12	CR2212	12	L2207	12	R2219	12	R2256	12	VR2205	12
C2222	12	CR2213	12	L2208	12	R2220	12	R2257	12	VR2206	12
C2223	12	CR2214	12			R2221	12	R2259	12	VR2207	12
C2224	12	CR2215	12	P2204	12	R2222	12	R2260	12		
C2225	12	CR2216	12			R2223	12	R2265	12	W28	12
C2226	12	CR2218	12	Q2201	12	R2224	12	R2266	12	W29	12
C2227	12	CR2219	12	Q2202	12	R2225	12	R2267	12	W31	12
C2228	12	CR2220	12	Q2203	12	R2226	12	R2268	12	W32	12
C2229	12	CR2227	12	Q2204	12	R2227	12	R2270	12	W2201	12
C2230	12	CR2228	12	Q2206	12	R2228	12	R2271	12		
C2232	12	CR2231	12	Q2208	12	R2229	12	R2272	12		
C2233	12	CR2232	12	Q2209	12	R2230	12	R2273	12		
C2234	12	CR2233	12	Q2210	12	R2231	12	R2274	12		
C2236	12	CR2234	12	Q2211	12	R2232	12	R2275	12		

http://www.ebay.com

REPLACEABLE MECHANICAL PARTS

PARTS ORDERING INFORMATION

Replacement parts are available from or through your local Tektronix, Inc. Field Office or representative.

Changes to Tektronix instruments are sometimes made to accommodate improved components as they become available, and to give you the benefit of the latest circuit improvements developed in our engineering department. It is therefore important, when ordering parts, to include the following information in your order: Part number, instrument type or number, serial number, and modification number if applicable.

If a part you have ordered has been replaced with a new or improved part, your local Tektronix, Inc. Field Office or representative will contact you concerning any change in part number.

Change information, if any, is located at the rear of this manual.

ITEM NAME

In the Parts List, an item Name is separated from the description by a colon(:). Because of space limitations, an Item Name may sometimes appear as incomplete. For further Item Name identification, the U.S. Federal Cataloging Handbook H6-1 can be utilized where possible.

FIGURE AND INDEX NUMBERS

Items in this section are referenced by figure and index numbers to the illustrations.

INDENTATION SYSTEM

This mechanical parts list is indented to indicate item relationships. Following is an example of the indentation system used in the description column.

1 2 3 4 5 *Name & Description*

Assembly and/or Component
Attaching parts for Assembly and/or Component

END ATTACHING PARTS

Detail Part of Assembly and/or Component
Attaching parts for Detail Part

END ATTACHING PARTS

Parts of Detail Part
Attaching parts for Parts of Detail Part

END ATTACHING PARTS

Attaching Parts always appear in the same indentation as the item it mounts, while the detail parts are indented to the right. Indented items are part of, and included with, the next higher indentation.

Attaching parts must be purchased separately, unless otherwise specified.

ABBREVIATIONS

Abbreviations conform to American National Standards Institute Y1.1

http://www.ebaman.com

CROSS INDEX - MFR. CODE NUMBER TO MANUFACTURER

Mfr. Code	Manufacturer	Address	City, State, Zip Code
06383	PANDUIT CORP	17301 RIDGELAND	TINLEY PARK IL 07094-2917
06915	RICHCO PLASTIC CO	5825 N TRIPP AVE	CHICAGO IL 60646-6013
07416	NELSON NAME PLATE CO	3191 CASITAS	LOS ANGELES CA 90039-2410
12327	FREEWAY CORP	9301 ALLEN DR	CLEVELAND OH 44125-4632
13103	THERMALLOY CO INC	2021 W VALLEY VIEW LN PO BOX 810839	DALLAS TX 75381
22670	G M NAMEPLATE INC	2040 15TH AVE WEST	SEATTLE WA 98119-2728
23740	AMUNEAL MFG CORP	4737 DARRAH	PHILADELPHIA PA 19124-2705
24931	SPECIALTY CONNECTOR CO INC	2100 EARLYWOOD DR PO BOX 547	FRANKLIN IN 46131
28520	HEYCO MOLDED PRODUCTS	750 BOULEVARD P O BOX 160	KENILWORTH NJ 07033-1721
52676	S. K. F. INDUSTRIES, INC.	P O BOX 6731	PHILADELPHIA, PA 19132
70903	COOPER BELDEN ELECTRONICS WIRE AND C SUB OF COOPER INDUSTRIES INC	2000 S BATAVIA AVE	GENEVA IL 60134-3325
71400	BUSSMANN DIV OF COOPER INDUSTRIES INC	114 OLD STATE RD PO BOX 14460	ST LOUIS MO 63178
75915	LITTELFUSE TRACTOR INC SUB TRACTOR INC	800 E NORTHWEST HWY	DES PLAINES IL 60016-3049
77900	SHAKEPROOF DIV OF ILLINOIS TOOL WORKS	SAINT CHARLES RD	ELGIN IL 60120
78189	ILLINOIS TOOL WORKS INC SHAKEPROOF DIV	ST CHARLES ROAD	ELGIN IL 60120
80009	TEKTRONIX INC	14150 SW KARL BRAUM DR PO BOX 500 MS 53-111	BEAVERTON OR 97077
83014	HARTWELL CORP	900 S RICHFIELD RD	PLACENTIA CA 92670-6732
83385	MICRODOT MFG INC GREER-CENTRAL DIV	3221 W BIG BEAVER RD	TROY MI 48098
86113	MICRODOT MFG INC CENTRAL SCREW-KEENE DIV	149 EMERALD ST	KEENE NH 03431-3628
93907	TEXTRON INC CAMCAR DIV	600 18TH AVE	ROCKFORD IL 61101
S3109	FELLER ASA ADOLF AG C/O PANEL COMPONENTS CORP	355 TESCONI CIRCLE	SANTA ROSA CA 95401
S3629	SCHURTER AG H C/O PANEL COMPONENTS CORP	2015 SECOND STREET	BERKELEY CA 94170
TK0174	BADGLEY MFG CO	1620 NE ARGYLE	PORTLAND OR 97211
TK0858	STAUFFER SUPPLY CO	105 SE TAYLOR	PORTLAND OR 97214
TK1319	MORELLIS Q & D PLASTICS	1812 16-TH AVE	FOREST GROVE OR 97116
TK1373	PATELEC-CEM (ITALY)	10156 TORINO	VAICENTALLO 62/45S ITALY
TK1808	FASTEX	195 ALGONQUIN RD	DES PLAINES IL 60016
TK1938	GALGON INDUSTRIES	37399 CENTRAL MONT PLACE	FREMONT CA 94536
TK2165	TRI-QUEST CORP	3000 LEWIS AND CLARK HWY	VANCOUVER WA 98661-2999

http://www.tabaman.com

Fig. & Index No.	Tektronix Part No.	Serial/Assembly No. Effective	Dscont	Qty	12345 Name & Description	Mfr. Code	Mfr. Part No.
1-1	334-7078-00			1	MARKER,IDENT:MARKED 2245A,HANDLE	80009	334-7078-00
-2	367-0289-00			1	HANDLE,CARRYING:13.855,SST	80009	367-0289-00
					ATTACHING PARTS		
-3	212-0144-00			2	SCREW,TPG,TF:8-16 X 0.562,PLASTITE,SPCL HD	93907	225-38131-012
					END ATTACHING PARTS		
-4	200-3233-01			1	COVER,REAR:POLYCARBONATE,SMOKE TAN	80009	200-3233-01
					ATTACHING PARTS		
-5	211-0691-00			4	SCREW,MACHINE:6-32 X 0.625,PNH,STL	93907	ORDER BY DESCR
					END ATTACHING PARTS		
-6	334-6707-00			1	MARKER,IDENT:MKD CAUTION	80009	334-6707-00
-7	334-6708-00			1	MARKER,IDENT:MKD REAR PANEL Z-AXIS	80009	334-6708-00
-8	348-0919-00			2	FOOT,CABINET:BLACK POLYURETHANE	80009	348-0919-00
-9	390-0980-00			1	CABINET,OSC:GPSB	80009	390-0980-00
-10	213-0882-00			1	SCREW,TPG,TR:6-32 X 0.437 TAPTITE,PNH,STL	83385	ORDER BY DESCR
-11	348-0659-00			2	FOOT,CABINET:BLACK POLYURETHANE	80009	348-0659-00

http://www.ebaman.com

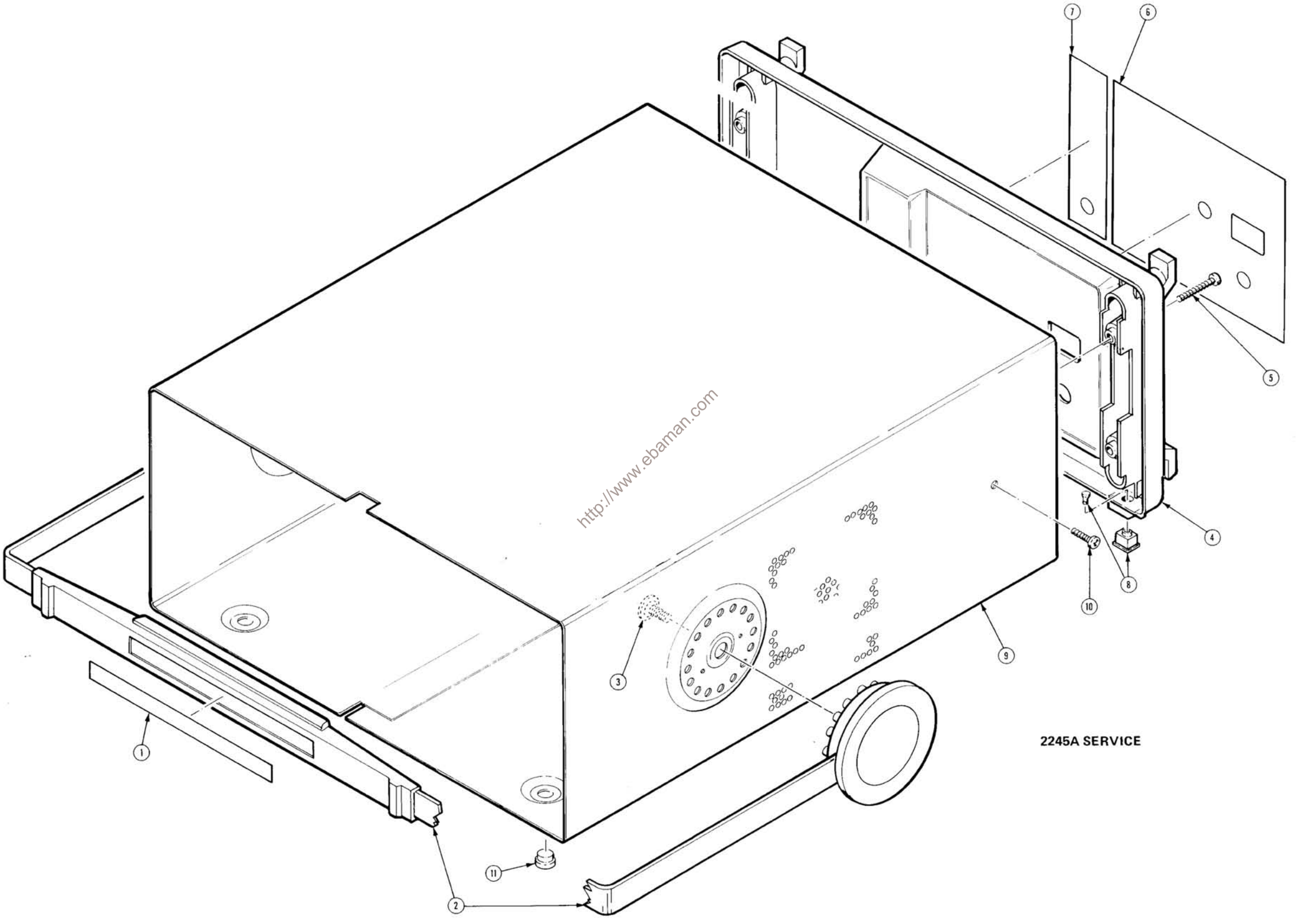

http://www.ebaman.com

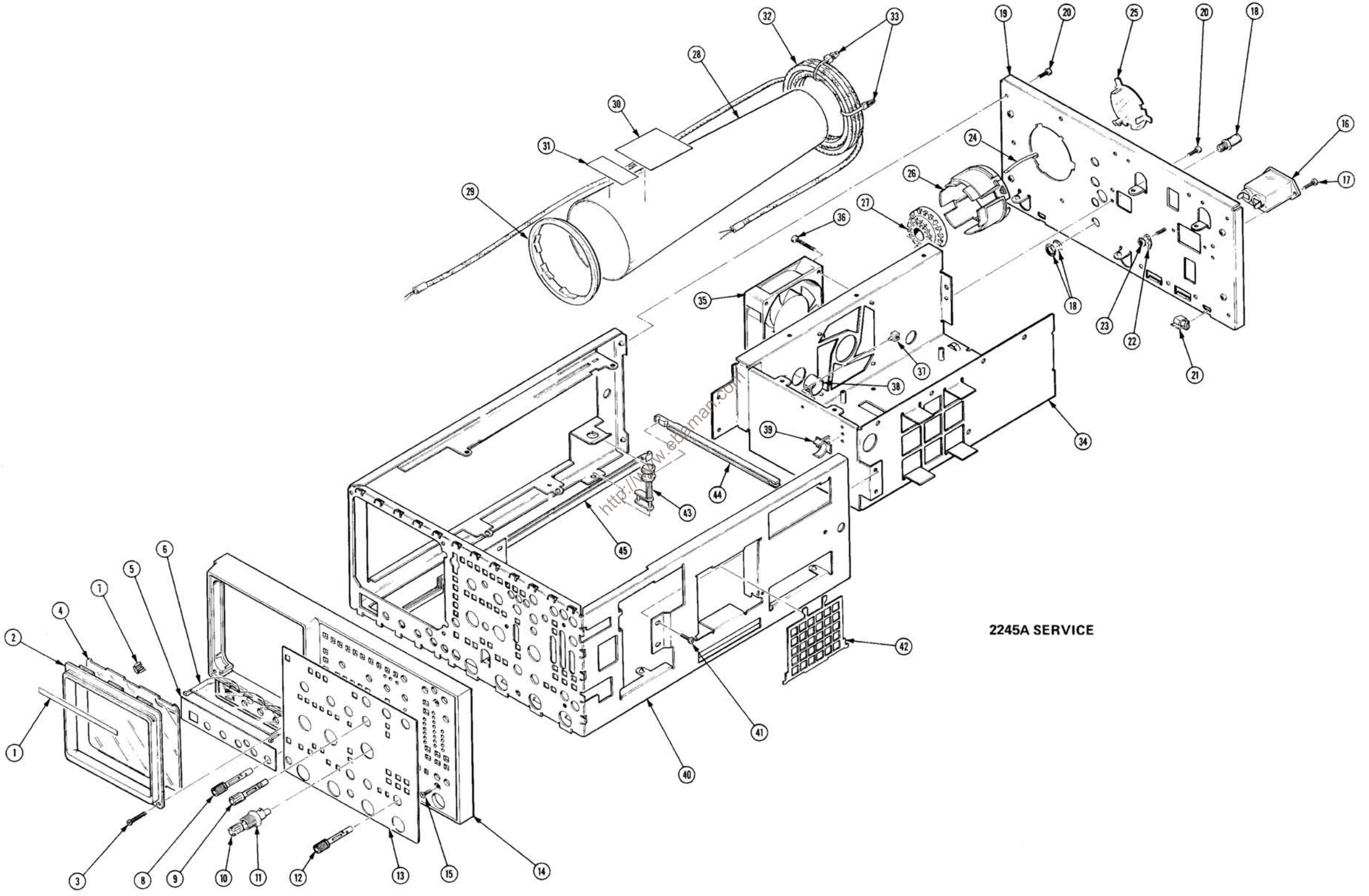
2245A SERVICE

Fig. & Index No.	Tektronix Part No.	Serial/Assembly No. Effective	Dscont	Qty	12345 Name & Description	Mfr. Code	Mfr. Part No.
2-1	334-7079-00			1	MARKER,IDENT:MARKED 2245A,BEZEL	80009	334-7079-00
-2	426-1765-02			1	FRAME,CRT:POLYCARBONATE,GRAY	80009	426-1765-02
					ATTACHING PARTS		
-3	211-0690-01			2	SCREW,MACHINE:6-32 X 0.875 PNH,SST	86113	ORDER BY DESCR
					END ATTACHING PARTS		
-4	337-2775-00			1	SHLD,IMPLOSION:FILTER,BLUE	80009	337-2775-00
-5	333-3290-00			1	PANEL,FRONT:	80009	333-3290-00
-6	351-0752-00			1	GUIDE,LIGHT:ACRYLIC GRATICULE	80009	351-0752-00
-7	348-0660-00			4	CUSHION,CRT:POLYURETHANE	80009	348-0660-00
-8	366-2089-00			5	KNOB:GRAY,PUSH ON,0.185 X 0.392 X 0.495	80009	366-2089-00
-9	366-2093-00			2	KNOB:DOVE GRAY,0.235 ID X 0.36 OD X 0.495H	80009	366-2093-00
-10	366-1510-00			3	KNOB:DOVE GRAY,VAR,0.127 X 0.392 X 0.466	80009	366-1510-00
-11	366-2090-00			3	KNOB:GRAY,VAR,0.2 ID X 0.546 OD X 0.69 H	80009	366-2090-00
-12	366-2089-00			8	KNOB:GRAY,PUSH ON,0.185 X 0.392 X 0.495	80009	366-2089-00
-13	333-3557-00			1	PANEL,FRONT:	80009	333-3557-00
-14	386-3339-00			1	SUBPANEL,FRONT:	80009	386-3339-00
					ATTACHING PARTS		
-15	213-0882-00			2	SCREW,TPG,TR:6-32 X 0.437 TAPTITE,PNH,STL	83385	ORDER BY DESCR
					END ATTACHING PARTS		
-16	----- -----			1	FILTER,RFI: (SEE FL2201 REPL)		
					ATTACHING PARTS		
-17	213-0882-00			2	SCREW,TPG,TR:6-32 X 0.437 TAPTITE,PNH,STL	83385	ORDER BY DESCR
					END ATTACHING PARTS		
-18	----- -----			1	CONN,RCPT,ELEC:BNC (SEE J16 REPL)		
-19	441-1721-00			1	CHASSIS,REAR:GPSB	80009	441-1721-00
					ATTACHING PARTS		
-20	213-0882-00			10	SCREW,TPG,TR:6-32 X 0.437 TAPTITE,PNH,STL	83385	ORDER BY DESCR
					END ATTACHING PARTS		
-21	343-1240-00			2	CLAMP,CABLE:0.25 ID,NYLON	TK1808	220-340802-00
-22	----- -----			1	LEAD,ELECTRICAL: (SEE W30 REPL)		
					ATTACHING PARTS		
-23	210-0457-00			1	NUT,PL,ASSEM WA:6-32 X 0.312,STL CD PL	78189	511-061800-00
	210-0006-00			1	WASHER,LOCK:#6 INTL,0.018 THK,STL	77900	1206-00-00-0541C
					END ATTACHING PARTS		
-24	214-1061-06			1	SPRING,GROUND:CRT SHIELD	80009	214-1061-06
-25	200-2519-00			1	CAP,CRT SOCKET:NATURAL LEXAN	80009	200-2519-00
-26	426-1766-00			1	MOUNT,RESILIENT:CRT,REAR	80009	426-1766-00
-27	----- -----			1	WIRE SET,ELEC:SOCKET ASSY CRT (SEE A10W9)		
-28	337-2774-00			1	SHIELD,ELEC:CRT,STEEL	23740	C-2059
-29	386-4443-00			1	SUPPORT,SHIELD:CRT,FRONT,PLASTIC	80009	386-4443-00
-30	334-1951-00			1	MARKER,IDENT:MKD WARNING,CRT VOLTAGES	22670	ORDER BY DESCR
-31	334-1379-00			1	MARKER,IDENT:MKD HI VACUUM	07416	ORDER BY DESCR
-32	----- -----			1	DELAY LINE,ELEC: (SEE DL21 REPL)		
-33	343-0549-00			3	STRAP,TIEDOWN,E:0.091 W X 4.0 L,ZYTEL	06383	PLT1M
-34	441-1720-00			1	CHAS,PWR SUPPLY:GPSB	80009	441-1720-00
-35	----- -----			1	FAN,TUBEAXIAL: (SEE B25 REPL)		
					ATTACHING PARTS		
-36	213-0991-00			4	SCREW,TPG,TC:6-32 X 1.25 L,TYPE T,PNH,STL	TK0858	ORDER BY DESCR
					END ATTACHING PARTS		
-37	343-1305-00			1	CLP,WIRE SADDLE:0.437 ID,NYLON	06915	WS-1N
-38	348-0532-00			2	GROMMET,PLASTIC:BLACK,ROUND,0.625 ID	28520	SB-750-10
-39	344-0347-00			1	CLIP,ELECTRICAL:ANODE,0.72 OD,NYLON	TK2165	ORDER BY DESCR
-40	441-1719-00			1	CHASSIS,MAIN:GPSB	80009	441-1719-00
					ATTACHING PARTS		
-41	213-0882-00			6	SCREW,TPG,TR:6-32 X 0.437 TAPTITE,PNH,STL	83385	ORDER BY DESCR
					END ATTACHING PARTS		
-42	378-0295-00			1	GRILLE,AIR DUCT:ALUMINUM	80009	378-0295-00
-43	214-3835-00			1	ARM,PIVOT:POWER SWITCH	80009	214-3835-00
-44	384-1697-00			1	EXTENSION SHAFT:6.25 L X 0.285 OD,NYLON	80009	384-1697-00
-45	384-1696-00			1	EXTENSION SHAFT:12.2 L X 0.285 OD,NYLON	80009	384-1696-00
	361-1427-00			2	SPACER,CABLE:SILICONE	80009	361-1427-00

http://www.tekscopes.com

Fig. & Index No.	Tektronix Part No.	Serial/Assembly No. Effective	Dscont	Qty	12345 Name & Description	Mfr. Code	Mfr. Part No.
3-1	----- -----			1	CIRCUIT BD ASSY:POTENTIOMETER (SEE A12)		
					ATTACHING PARTS		
-2	214-3826-00			7	LATCH,PLUNGER:BLACK	80009	214-3826-00
	348-0904-00			7	GROMMET,FSTNR:0.187 DIA,BLACK	83014	HN3G-32-1
					END ATTACHING PARTS		
-3	376-0130-00			3	COUPLER,SHAFT:2.260 L X 0.132 ID,POLYCARB	80009	376-0130-00
-4	----- -----			1	CIRCUIT BD ASSY:SWITCH (SEE A14 REPL)		
-5	260-2271-00			1	SWITCH,PUSH:42 BUTTON,2 POLE	80009	260-2271-00
-6	366-2088-00			14	PUSH BUTTON:GRAY,0.172 SQ X 0.3 H	80009	366-2088-00
-7	105-0997-00			3	ACTUATOR,CAM SW:CHRONOMATIC CONTACT	80009	105-0997-00
-8	214-1126-01			3	SPRING,FLAT:0.7 X 0.125,CU BE GRN CLR	80009	214-1126-01
-9	214-0274-00			3	BALL,BEARING:0.125 DIA,SST,GRADE 100	52676	ORDER BY DESCR
-10	366-2091-00			17	PUSH BUTTON:CLEAR,0.312 DIA X 0.3 H	80009	366-2091-00
-11	380-0767-00			1	HOUSING,SWITCH:POLYCARBONATE	80009	380-0767-00
-12	----- -----			1	CIRCUIT BD ASSY:PROCESSOR (SEE A16 REPL)		
					ATTACHING PARTS		
-13	213-0882-00			12	SCREW,TPG,TR:6-32 X 0.437 TAPTITE,PNH,STL	83385	ORDER BY DESCR
-14	211-0691-00			2	SCREW,MACHINE:6-32 X 0.625,PNH,STL	93907	ORDER BY DESCR
					END ATTACHING PARTS		
-15	131-1428-00			1	CONTACT,ELEC:GROUNDING,CU BE CD PL	80009	131-1428-00
					ATTACHING PARTS		
-16	213-0882-00			1	SCREW,TPG,TR:6-32 X 0.437 TAPTITE,PNH,STL	83385	ORDER BY DESCR
					END ATTACHING PARTS		
-17	337-3290-01			1	SHIELD,ELEC:TOP,W/CAUTION LABEL	80009	337-3290-01
-18	334-4251-00			1	MARKER,IDENT:MKD CAUTION	07416	ORDER BY DESCR
-19	----- -----			1	CIRCUIT BD ASSY:LVPS (SEE A18 REPL)		
					ATTACHING PARTS		
-20	213-0882-00			6	SCREW,TPG,TR:6-32 X 0.437 TAPTITE,PNH,STL	83385	ORDER BY DESCR
					END ATTACHING PARTS		
					LVPS BOARD INCLUDES:		
-21	204-0906-00			1	.BODY,FUSEHOLDER:3AG & 5 X 20MM FUSES	S3629	TYPEFAU031.3573
-22	200-2264-00			1	.CAP,FUSEHOLDER:3AG FUSES	S3629	FEK 031 1666
-23	214-3821-00			2	.HEAT SK,XSTR:PWR SPLY,GOLD W/CHROMATE PL	80009	214-3821-00
-24	----- -----			1	.SWITCH,THRMSTC: (SEE A18S2202 REPL)		
					ATTACHING PARTS		
-25	213-0882-00			2	.SCREW,TPG,TR:6-32 X 0.437 TAPTITE,PNH,STL	83385	ORDER BY DESCR
					END ATTACHING PARTS		
-26	----- -----			1	.TRANSISTOR: (SEE A18Q2201 REPL)		
					ATTACHING PARTS		
-27	213-0882-00			1	.SCREW,TPG,TR:6-32 X 0.437 TAPTITE,PNH,STL	83385	ORDER BY DESCR
					END ATTACHING PARTS		
-28	----- -----			1	.TRANSISTOR: (SEE A18Q2214 REPL)		
					ATTACHING PARTS		
-29	213-0882-00			1	.SCREW,TPG,TR:6-32 X 0.437 TAPTITE,PNH,STL	83385	ORDER BY DESCR
					END ATTACHING PARTS		
-30	344-0410-00			1	.CLIP,COIL SPRT:1 X 1.46,POLYCARBONATE	TK1319	ORDER BY DESCR
-31	342-0781-00			1	INSUL,PWR SPLY:POLYCARBONATE	80009	342-0781-00
-32	----- -----			1	CIRCUIT BD ASSY:MAIN (SEE A10 REPL)		
	342-0324-00			6	.INSULATOR,DISK:TRANSISTOR,NYLON	13103	7717-5N-BLUE
-33	337-3342-02			2	.SHIELD,ELEC:HIGH VOLTAGE,2246	80009	337-3342-02
-34	337-3358-01			1	.SHIELD,ATTEN:FRONT,MAIN BD	80009	337-3358-01
					ATTACHING PARTS		
-35	211-0690-01			2	.SCREW,MACHINE:6-32 X 0.875 PNH,SST	86113	ORDER BY DESCR
					END ATTACHING PARTS		
-36	337-3279-00			1	.SHIELD,ATTEN:ALUMINUM	TK1938	ORDER BY DESCR
					ATTACHING PARTS		
-37	213-0882-00			10	.SCREW,TPG,TR:6-32 X 0.437 TAPTITE,PNH,STL	83385	ORDER BY DESCR
					END ATTACHING PARTS		
-38	344-0286-00			5	.CLIP,ELECTRICAL:FUSE,SPR BRS	75915	102074
-39	343-0003-00			1	.CLAMP,LOOP:0.25 ID,PLASTIC	06915	E4 CLEAR ROUND
					ATTACHING PARTS		
-40	213-0882-00			1	.SCREW,TPG,TR:6-32 X 0.437 TAPTITE,PNH,STL	83385	ORDER BY DESCR
-41	210-0949-00			1	.WASHER,FLAT:0.141 ID X 0.5 OD X 0.062,BRS	12327	ORDER BY DESCR
					END ATTACHING PARTS		
-42	407-3416-00			1	.BRACKET,ATTEN:BRASS	80009	407-3416-00
-43	----- -----			4	.CONN,RCPT,ELEC:BNC,MALE		
					.(SEE A10J11,J12,J13,J14)		
					ATTACHING PARTS		

http://www.tekscope.com

Fig. & Index No.	Tektronix Part No.	Serial/Assembly No. Effective	Dscont	Qty	12345 Name & Description	Mfr. Code	Mfr. Part No.
3-44	220-0497-00			4	.NUT,PLAIN,HEX:0.5-28 X 0.562 HEX,BRS CD PL	80009	220-0497-00
-45	210-1039-00			4	.WASHER,LOCK:0.521 ID,INT,0.025 THK,SST	24931	ORDER BY DESCR
					END ATTACHING PARTS		
-46	214-3136-00			2	.HEAT SINK,XSTR:TO-5,ALUMINUM	13103	2228B
	358-0715-00			2	.BUSHING,SNAP:0.25 X 0.234,NYL,0.375	28520	2810
-47	384-1702-00			1	.EXTENSION SHAFT:9.97 L X 0.25,POLYMIDE	80009	384-1702-00
-48	----- -----			1	.CIRCUIT BD ASSY:CRT CONTROL (SEE A8 REPL)		
-49	358-0715-00			1	..BUSHING,SNAP:0.25 X 0.234,NYL,0.375	28520	2810
	384-1713-00			4	..EXTENSION SHAFT:0.918 L X 0.218 OD,PLASTIC	80009	384-1713-00

http://www.ebaman.com

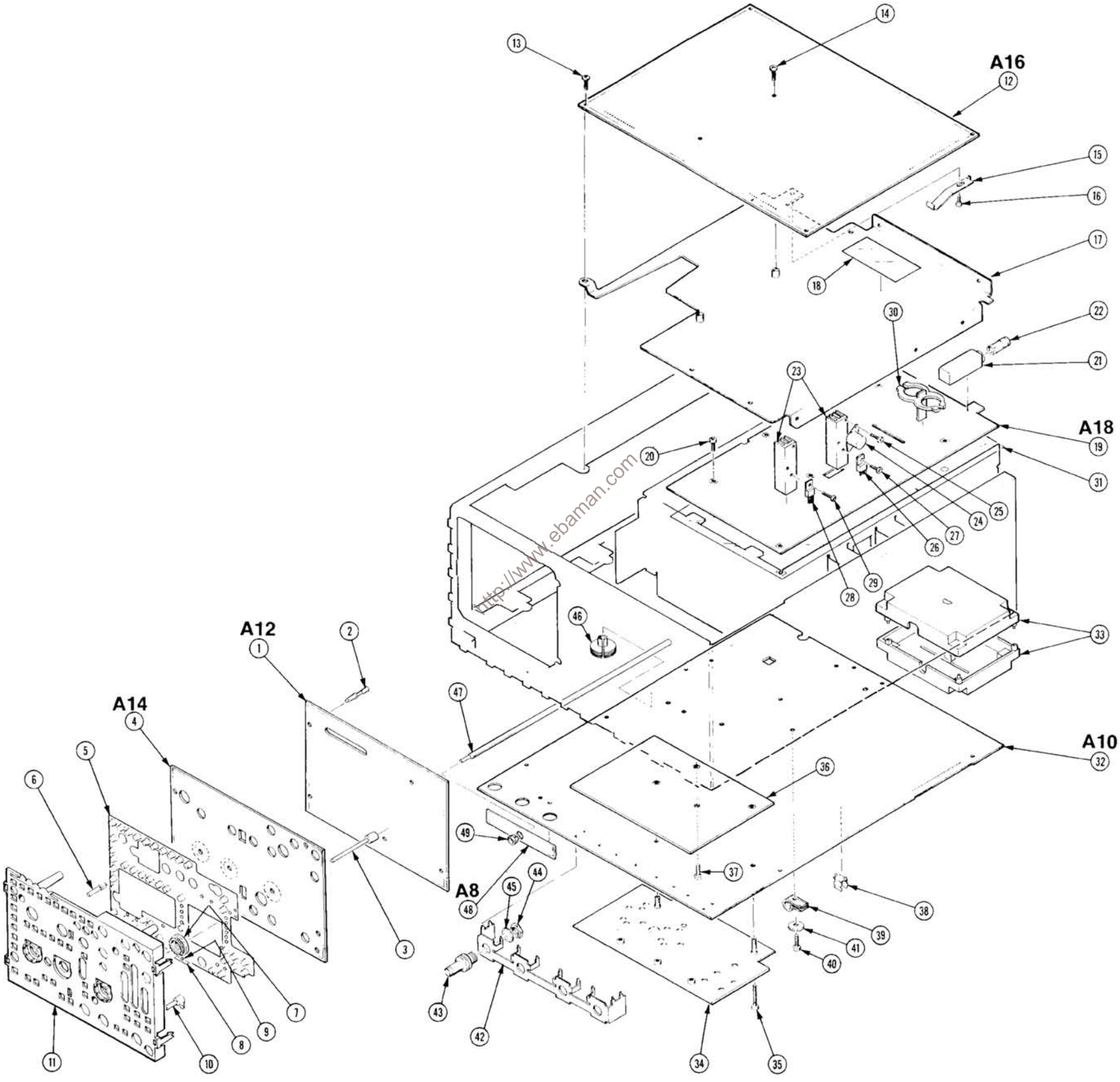
A16
A18
A12
A14
A8
A10
1
2
3
4
5
6
7
8
9
10
11
12
13
14
15
16
17
18
19
20
21
22
23
24
25
26
27
28
29
30
31
32
33
34
35
36
37
38
39
40
41
42
43
44
45
46
47
48
49
http://www.ebaman.com

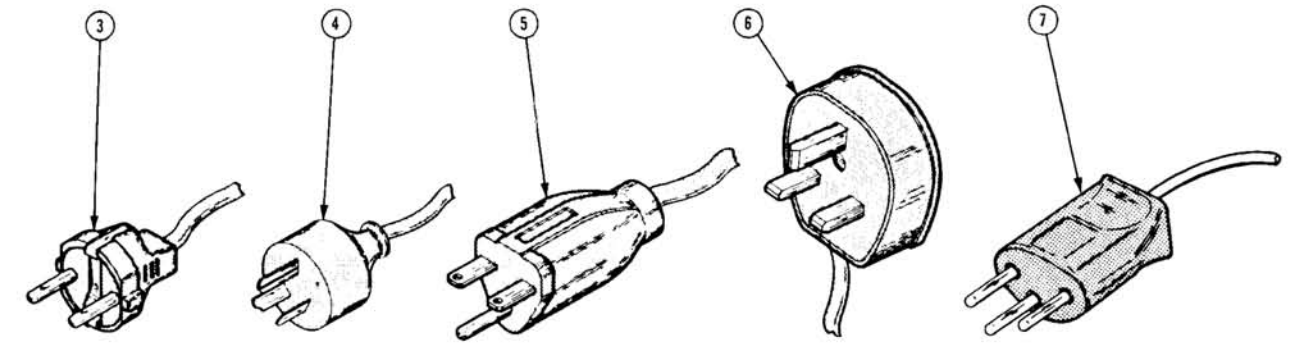

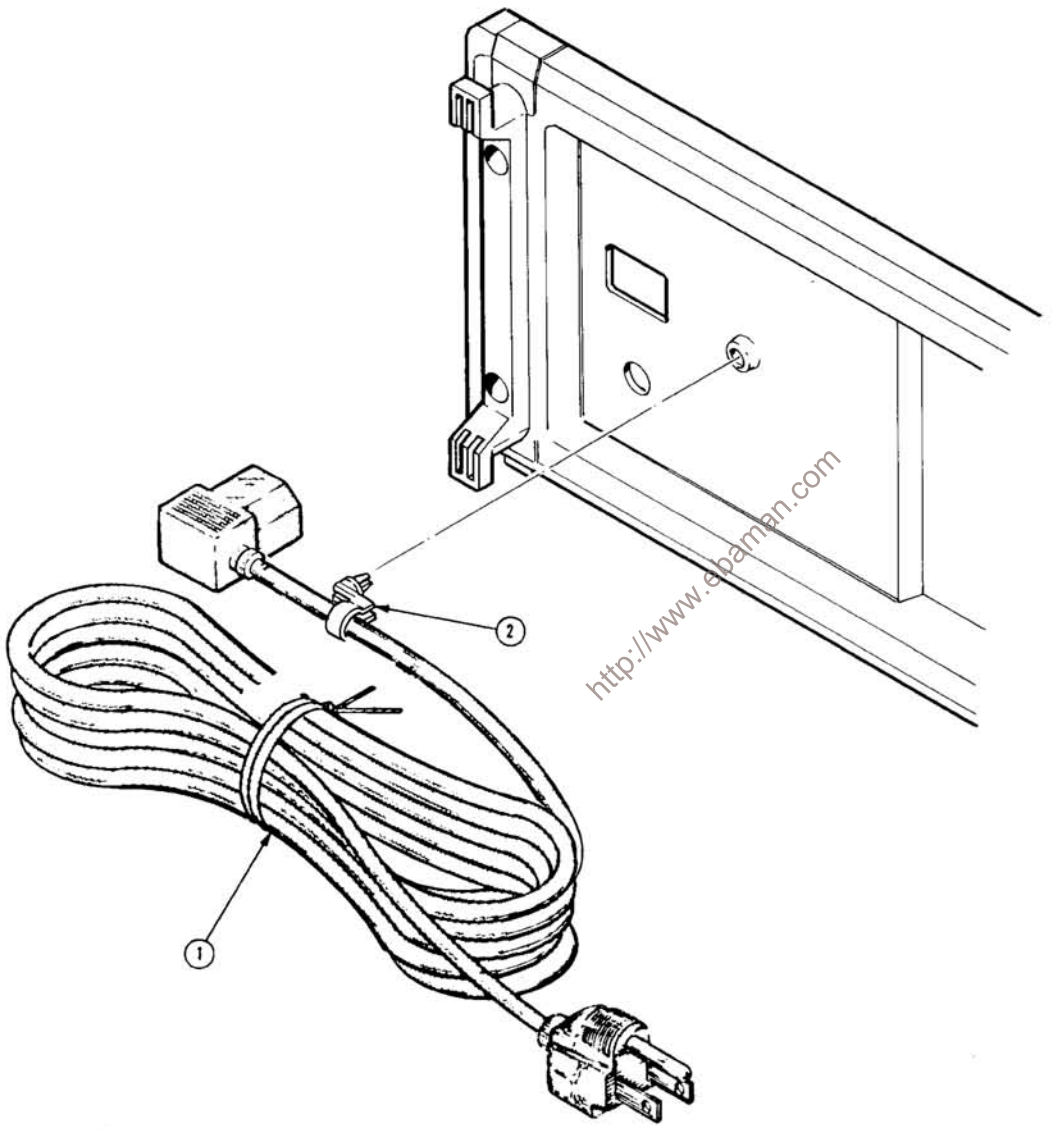

http://www.abamban.com

Fig. & Index No.	Tektronix Part No.	Serial/Assembly No. Effective	Dscont	Qty	12345	Name & Description	Mfr. Code	Mfr. Part No.
4-								
						STANDARD ACCESSORIES		
-1	161-0230-01			1		CABLE ASSY,PWR,:3,18 AWG,92.0 L	80009	161-0230-01
-2	343-1213-00			1		CLAMP,PWR CORD:POLYMIDE	80009	343-1213-00
	020-0859-00			1		COMPONENT KIT:EUROPEAN	80009	020-0859-00
	343-0170-00			1		.RTNR,CA TO CA:U/W 0.25 OD CABLES	80009	343-0170-00
-3	161-0104-06			1		.CABLE ASSY,PWR,:3 X 0.75MM SQ,220V,98.0 L .(OPTION A1 - EUROPEAN)	S3109	ORDER BY DESCR
	020-0860-00			1		COMPONENT KIT:UNITED KINGDOM	80009	020-0860-00
	343-0170-00			1		.RTNR,CA TO CA:U/W 0.25 OD CABLES	80009	343-0170-00
-4	161-0104-07			1		.CABLE ASSY,PWR,:3 X 0.75MM SQ,240V,98.0 L .(OPTION A2 - UNITED KINGDOM)	TK1373	A25UK-RA
	020-0861-00			1		COMPONENT KIT:AUSTRALIAN	80009	020-0861-00
	343-0170-00			1		.RTNR,CA TO CA:U/W 0.25 OD CABLES	80009	343-0170-00
-5	161-0104-05			1		.CABLE ASSY,PWR,:3,18 AWG,240V,98.0 L .(OPTION A3 - AUSTRALIAN)	S3109	ORDER BY DESCR
	020-0862-00			1		COMPONENT KIT:NORTH AMERICAN	80009	020-0862-00
	343-0170-00			1		.RTNR,CA TO CA:U/W 0.25 OD CABLES	80009	343-0170-00
-6	161-0104-08			1		.CABLE ASSY,PWR,:3,18 AWG,240V,98.0 L .(OPTION A4 - NORTH AMERICAN)	70903	ORDER BY DESCR
	020-0863-00			1		COMPONENT KIT:SWISS	80009	020-0863-00
	343-0170-00			1		.RTNR,CA TO CA:U/W 0.25 OD CABLES	80009	343-0170-00
-7	161-0167-00			1		.CABLE ASSY,PWR,:3.0 X 0.75,6A,240V,2.5M L .(OPTION A5 - SWISS)	S3109	ORDER BY DESCR
	----- -----			1		ACCESSORY PKG:2,P6109 OPT 01 W/ACCESSORIES		
	070-6558-00			1		MANUAL,TECH:OPERATORS,2245A	80009	070-6558-00
	070-6718-00			1		CARD,INFO:REFERENCE,2245A	80009	070-6718-00
	159-0023-00			1		FUSE,CARTRIDGE:3AG,2A,250V,SLOW BLOW	71400	MDX2
	337-2775-01			1		SHLD,IMPLOSION:	80009	337-2775-01
						OPTIONAL ACCESSORIES		
	016-0180-00			1		VISOR,CRT:FOLDING	TK2165	ORDER BY DESCR
	016-0359-01			1		ADAPTER HOOD:	80009	016-0359-01
	016-0592-00			1		VISOR,CRT:	TK2165	ORDER BY DESCR
	016-0848-00			1		COVER,PROT:WATERPROOF VINYL	80009	016-0848-00
	016-0857-00			1		ACCESSORY POUCH:W/PLATE,2246	TK0174	ORDER BY DESCR
	070-6557-00			1		MANUAL,TECH:SERVICE,2245A	80009	070-6557-00
	200-3232-00			1		COVER,FRONT:	80009	200-3232-00
	346-0199-00			1		STRAP,CARRYING:MKD TEKTRONIX	80009	346-0199-00

http://www.bebaman.com

MANUAL CHANGE INFORMATION

At Tektronix, we continually strive to keep up with latest electronic developments by adding circuit and component improvements to our instruments as soon as they are developed and tested.

Sometimes, due to printing and shipping requirements, we can't get these changes immediately into printed manuals. Hence, your manual may contain new change information on following pages.

A single change may affect several sections. Since the change information sheets are carried in the manual until all changes are permanently entered, some duplication may occur. If no such change pages appear following this page, your manual is correct as printed.

http://www.ebaman.com

Tektronix®
COMMITTED TO EXCELLENCE

MANUAL CHANGE INFORMATION

Date: 11-28-88 Change Reference: M67629

Product: 2245A SERVICE Manual Part Number: 070-6557-00

DESCRIPTION Product Group 46

EFFECTIVE SERIAL NUMBER: B013034

REPLACEABLE ELECTRICAL PARTS LIST CHANGES

CHANGE TO:

A10AT117	307-2135-01	RES NTWK, FXD, FI: ATTENUATOR DIP PKG
A10AT127	307-2135-01	RES NTWK, FXD, FI: ATTENUATOR DIP PKG
A10U112	165-2232-01	MICROCKT, LINEAR: BUFFER AMPLIFIER
A10U122	165-2232-01	MICROCKT, LINEAR: BUFFER AMPLIFIER

http://www.ebaman.com

Tektronix®
COMMITTED TO EXCELLENCE

MANUAL CHANGE INFORMATION

Date: 11-28-88
Change Reference: M67127
Product: 2245A SERVICE
Manual Part Number: 070-6557-00

DESCRIPTION — Product Group 46

EFFECTIVE SERIAL NUMBER: B012888

REPLACEABLE ELECTRICAL PARTS LIST CHANGES

CHANGE TO:

A16	671-0314-02	CIRCUIT BD ASSY: PROCESSOR (WITHOUT U2519)
A16	672-0230-01	CIRCUIT BD ASSY: PROCESSOR (WITH U2519)
A16R2312	322-3252-00	RES,FXD,FILM: 4.12K OHM,1%,0.2W
A16R2313	322-3252-00	RES,FXD,FILM: 4.12K OHM,1%,0.2W
A16R2510	313-1511-00	RES,FXD,FILM: 510 OHM,5%,0.2W

ADD:

A16J2503	131-4529-00	CONNECTOR,RECEPTACLE: 10 PIN
A16R2525	313-1621-00	RES,FXD,FILM: 620 OHM,5%,0.2W

DELETE:

A16R2531	313-1102-00	RES,FXD,FILM: 1K OHM,5%,0.2W
A16R2533	313-1102-00	RES,FXD,FILM: 1K OHM,5%,0.2W
A16R2535	313-1102-00	RES,FXD,FILM: 1K OHM,5%,0.2W
A16R2537	313-1102-00	RES,FXD,FILM: 1K OHM,5%,0.2W
A16R2539	313-1102-00	RES,FXD,FILM: 1K OHM,5%,0.2W
A16R2541	313-1102-00	RES,FXD,FILM: 1K OHM,5%,0.2W

http://www.ebay.com

Product: 2245A SERVICE Date: 11-28-88 Change Reference: M67127

DESCRIPTION

DIAGRAM CHANGES

DIAGRAM 8 MEASUREMENT PROCESSOR

Change the value of resistor R2510 (location 2B) to 510 Ω.

DIAGRAM 10 SWITCH BOARD & INTERFACE

The following changes are illustrated with a partial schematic of Diagram 10 contained in this insert.

Remove the following list of 1K Ω resistors from the output of U2523. Locations are 1C through 1E.

R2531 R2533 R2535 R2537 R2539 R2541

Add connector J2503 and resistor R2525 (620 Ω).

http://www.ebaman.com

DIAGRAM 11 ADC AND DAC SYSTEM

Change the value of resistor R2312 (location 6F) to 4.12K Ω.

Change the value of resistor R2313 (location 7E) to 4.12K Ω.

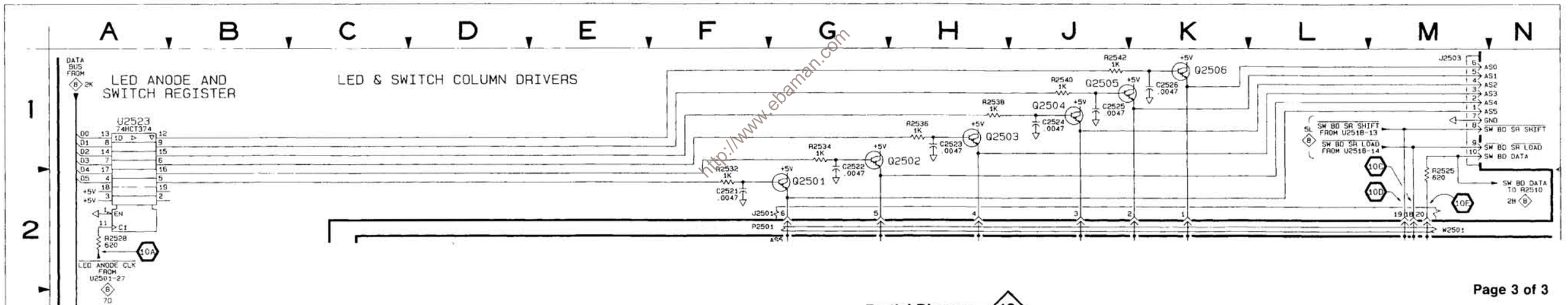

http://www.ebaman.com

Partial Diagram 10